SINGER

MAINTENANCE MANUAL
FOR
COMMUNICATIONS SERVICE MONITOR
MODEL CSM-1

Revision 1/79

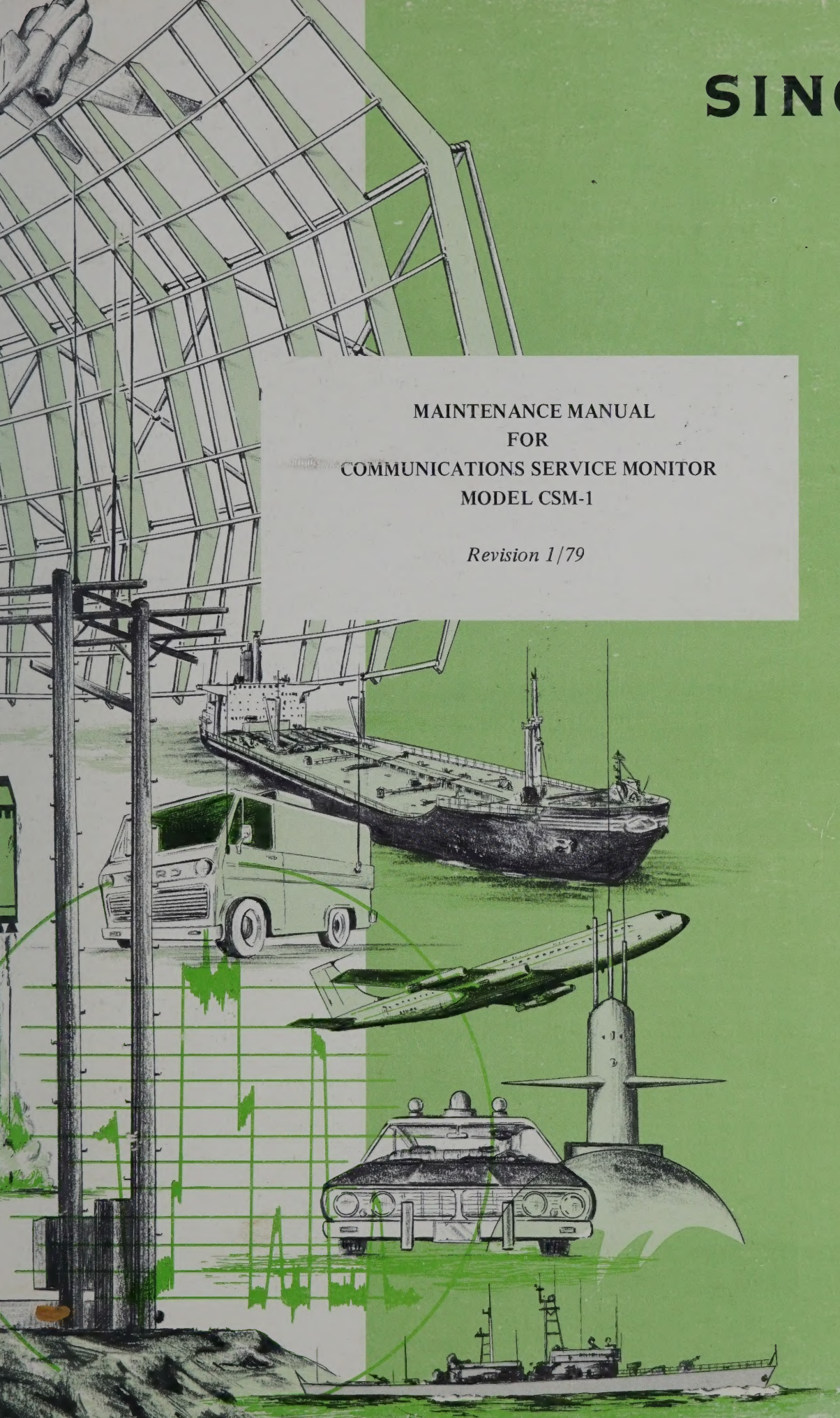

MAINTENANCE MANUAL
FOR
COMMUNICATIONS SERVICE MONITOR
MODEL CSM-1

Manual No. 1-500783-312
(For use with serial numbers 101 and above)

For operating information, refer to Operator's Manual No. 1-500783-311

Revision 1/79

Manuals dated 1st Print 8/76 and 2nd Print 7/78 are obsolete and superseded by this manual.

Contract Number:	DOT-FA75WA-3692
Contract Date:	June 30, 1975
Specification Number:	FAA-P-2596a

THE SINGER COMPANY
833 Sonora Avenue
Glendale, California 91201

FAPR 12A-7.160-3
Nov. 1974

WARRANTY

(a) Notwithstanding inspection and acceptance by the Government of supplies furnished under this contract or any provisions of this contract concerning the conclusiveness of said inspection and acceptance, the Contractor warrants each item delivered under the contract against defects in design, material or workmanship, and against any damage caused prior to delivery to the Government. Unless otherwise specified, this warranty extends for a period of one year from the date of first use by the Government or two years from date of delivery, whichever occurs first.

(b) Upon notice in writing, the Contractor shall, within 30 days after receipt of such notice repair or replace all defective or damaged items delivered under the contract, f.o.b. any point or points designated by the Government within the 48 contiguous states and the District of Columbia, at no cost to the Government. In the event the contractor is unable to effect such repair or replacement within the aforesaid 30 days, he shall within 15 days after receipt of notice, submit in writing a schedule of repair or replacement, to the Contracting Officer. The Contractor may elect to have any replaced item returned to his plant at his expense.

(c) Unless they fail as a result of improper application by the Contractor, electron tubes, batteries, natural rubber and material normally consumed in operation are excluded from this warranty, but shall in, any event be warranted by the Contractor to the extent of any warranty received by the Contractor from his supplier.

(d) If twenty percent (20%) or more of the total quantity of any part or component to which this warranty applies (but not fewer than two of any such part of component) fails in normal service, that fact shall be conclusive evidence that the design, material or workmanship of the item delivered under the contract is unsuitable for the purpose intended. Upon notice of this failure rate the Contractor shall: (i) replace all quantities of the part or component with a corrected part or component in a manner satisfactory to the Government, and at no cost to the Government, and (ii) if necessary to insure correction of the deficiency redesign the item delivered under the contract, or any portion thereof, in a manner satisfactory to the Government and at no cost to the Government. The provisions of this paragraph (d), however, shall not apply to any part or component to be furnished which is specifically identified in the contract by brand name; provided, however, that the Contractor shall warrant such part or component to the extent of any warranty received by the Contractor from his supplier.

(e) For a period of one year from the date of its first use by the Government or two years from the date of its replacement or redesign, whichever occurs first, each item (or portion thereof) or part or component, which is replaced or redesigned pursuant to paragraph (d) above, shall itself be warranted in accordance with the terms of paragraph (d).

(f) The warranty periods specified herein shall exclude any period of time an item fails to perform satisfactorily due to defects or damage to which this warranty applies.

(g) For the purposes of this "Warranty" clause, the term "item" is defined as the contact line item. In the event any item part, or subpart, or component thereof fails, the contractor shall be responsible for all actions necessary to correct such failure and return the contract line item to operating order.

(h) Failure to agree upon any determination to be made under this clause shall be a dispute concerning a question of fact within the meaning of the "Disputes" Clause of this contract.

SINGER INSTRUMENTATION
5340 Alla Road, Los Angeles, California 90066

CONTENTS

Section			Page
I	**INTRODUCTION**		
	1.1	General	1-1
	1.2	Purpose of Manual	1-1
	1.3	Approach to Maintenance	1-1
	1.3.1	Preventive Maintenance Interval	1-1
	1.3.2	Minimum Performance Procedures Defined	1-1
	1.3.3	Test Equipment Required	1-1
	1.3.4	Functional Analysis, Alignment, and Adjustment Defined	1-1
	1.3.5	Fault Isolation Procedures Defined	1-1
	1.4	Supplied Accessories	1-1
II	**SPECIFICATIONS**		
	2.1	Introduction	2-1
	2.2	Specifications	2-1
III	**CONTROLS, INDICATORS AND RECEPTACLES**		
	3.1	Introduction	3-1
IV	**INSTALLATION INSTRUCTIONS**		
	4.1	Introduction	4-1
	4.2	Equipment Setup	4-1
	4.3	240 V Operation	4-1
	4.4	RF Fuse Replacement	4-1
V	**THEORY OF OPERATION**		
	5.1	Introduction	5-1
	5.2	Basic Theory of Operation	5-1
	5.3	Detailed Theory	5-3
	5.3.1	10 MHz Buffer, A1	5-3
	5.3.2	100 Hz, 1 kHz, 10 kHz Decades and VCO, A2	5-3
	5.3.2.1	VCO Module, A2A1	5-3
	5.3.2.2	Low Frequency Decades, A2A2, A2A3,and A2A4	5-5
	5.3.3	100 kHz, 1MHz Decades and Fixed Frequency Generator, A3	5-5
	5.3.3.1	Fixed Frequency Generator, A3A1	5-5
	5.3.3.2	100 kHz Decade, A3A2	5-5
	5.3.3.3	1 MHz Decade, A3A3	5-5
	5.3.3.4	Measure Mode Frequency Offset	5-6
	5.3.4	10 MHz Decade, A4	5-6
	5.3.4.1	Mixers and Multipliers, A4A1 through A4A4	5-6
	5.3.4.2	Multipliers A4A6 through A4A10	5-6
	5.3.4.3	AM Modulator and Diode Switch Module, A4A5	5-6
	5.3.4.4	Gain Controlled Amplifier, A4A11	5-7
	5.3.5	100 MHz Decade, A5	5-8
	5.3.5.1	UHF Multipliers, A5A1 and A5A3 through A5A8, Diode Switches, A5A2 and A5A9	5-8
	5.3.5.2	Final Mixer, A5Z1	5-8
	5.3.5.3	Output BBA, A5A10	5-8
	5.3.5.4	Measure BBA, A22A1	5-9
	5.3.6	Circuit Measure Assembly, A6	5-9
	5.3.6.1	IF, Detector and Audio Amplifier, A6A1	5-9
	5.3.6.2	Vertical Deflection Amplifier, A6A2	5-10
	5.3.6.3	Horizontal Amplifier and Sweep Generator, A6A3	5-10
	5.3.6.4	Audio Oscillator, A6A4	5-11
	5.3.7	AM Measurement Circuit	5-11
	5.3.8	Main Power Supply Including A7 Regulator	5-12
	5.3.9	High Voltage Power Supply, A8	5-12

CONTENTS (Cont.)

Section			Page
VI	MINIMUM PERFORMANCE TEST PROCEDURES		
	6.1	Introduction	6-1
	6.2	Test Equipment Required	6-1
	6.3	Warm-Up Time Test	6-1
	6.4	120 V/240 V ac Line Voltage Operation	6-1
	6.5	Frequency Accuracy and Spectral Purity Tests	6-6
	6.5.1	Frequency Accuracy Tests	6-6
	6.5.2	Variable Frequency Oscillator Accuracy Test	6-7
	6.5.3	Residual FM Test	6-7
	6.5.4	Harmonics Test	6-8
	6.5.5	Spurious Outputs	6-9
	6.5.6	Residual AM Test	6-9
	6.6	Signal Generator Mode Tests	6-10
	6.6.1	Output Level Accuracy Test	6-10
	6.6.2	Output Leakage Test	6-12
	6.6.3	Output Impedance and VSWR Test	6-12
	6.6.4	Internal Modulation Oscillator Frequency Test	6-13
	6.6.5	Amplitude Modulation Range, Accuracy and Distortion Test	6-14
	6.6.6	3 dB AM Bandwidth Test	6-15
	6.6.7	Incidental FM Test	6-15
	6.6.8	Sweep Width Test	6-16
	6.6.9	Sweep Rate Test	6-17
	6.7	Frequency Meter Mode Tests	6-17
	6.7.1	Frequency Measurement Range, Accuracy and Resolution Tests	6-17
	6.7.2	Frequency Measurement Sensitivity and Overload Test	6-18
	6.8	Amplitude Modulation Meter Mode Tests	6-19
	6.8.1	Amplitude Modulation Factor Measurement Range and Accuracy at 1 kHz	6-19
	6.8.2	Test of Modulation Frequency Range of AM Factor Measurement	6-19
	6.9	Oscilloscope Mode Tests	6-20
	6.9.1	Vertical Frequency Response, Vertical Sensitivity, Sweep Rate Range, and Synchronization Tests	6-20
	6.9.2	External Horizontal Input Sensitivity Test	6-21
	6.10	Noise Floor Level Test	6-21
VII	MAINTENANCE		
	7.1	Introduction	7-1
	7.2	Safety Considerations	7-1
	7.3	Test Equipment Required	7-1
	7.4	Synthesizer Foldout	7-1
	7.5	Introduction to Adjustments	7-7
	7.5.1	General	7-7
	7.5.2	PC Board Covers	7-7
	7.5.3	Types of Adjustments	7-7
	7.6	Primary Adjustments	7-7
	7.6.1	DC Power Supply Adjustment	7-7
	7.6.2	Frequency Adjustment of TCXO	7-10
	7.6.3	RF Output Power Level Adjustment (Model CSM-1 in the GENERATE Mode)	7-10
	7.6.4	Gain Adjustment of Model CSM-1 Used As Amplitude Modulation Meter	7-12
	7.6.5	VCO Adjustment	7-12
	7.6.6	FM Sensitivity and FM Linearity Adjustment	7-13
	7.6.7	AM Accuracy and EXT AM Sensitivity Adjustments	7-15
	7.6.8	400 Hz/1 kHz Audio Frequency and Level Adjustment	7-16
	7.6.9	Horizontal Sweep Frequency Adjustment	7-16
	7.6.10	Vertical Deflection Sensitivity Adjustment	7-16
	7.7	Secondary Adjustments	7-17
	7.7.1	10 MHz Buffer (A1)	7-17
	7.7.1.1	A1 Adjustment Procedure	7-17
	7.7.2	Localizing Malfunctions to A2/A3 or A4/A5	7-17
	7.7.3	Level Adjustment, Tuning and Test Procedure for A4/A5 Deck Pair	7-18
	7.7.3.1	200-210 MHz Tuned Amplifier Adjustment (A4A1)	7-18
	7.7.3.2	810 MHz Multiplier Adjustment, A4A2 and A4A3	7-18

CONTENTS (Cont.)

Section			Page
	7.7.3.3	920-940 MHz Amplifier (A4A4) Adjustment	7-18
	7.7.3.4	140-220 MHz Fixed Frequency Signal Adjustment	7-18
	7.7.3.5	0.8, 0.9, 1.0, 1.1, 1.2, 1.3 GHz High Frequency Multipliers (A5A3 Thru A5A8)	7-21
	7.7.3.6	X10 Multiplier, 10 MHz to 100 MHz (A5A1)	7-21
	7.7.3.7	Verifying Correct C6 Tuning on Low Frequency Multipliers (A4A2, A4A6 Through A4A10 and A5A1)	7-21
	7.7.4	Level Adjustment, Tuning and Test Procedure for A2/A3 Deck Pair	7-21
	7.7.4.1	Fixed Frequency Generator PC Board (A3A1) Level and Tuning Adjustments	7-21
	7.7.4.2	100 Hz Decade PC Board (A2A2) Level and Tuning Adjustments	7-22
	7.7.4.3	1 kHz Decade PC Board (A2A3) Level and Tuning Adjustments	7-27
	7.7.4.4	10 kHz Decade PC Board (A2A4) Level and Tuning Adjustments	7-27
	7.7.4.5	100 kHz Decade PC Board (A3A2) Level and Tuning Adjustments	7-27
	7.7.4.6	1 MHz Decade PC Baord (A3A3) Level and Tuning Adjustments	7-28
	7.7.5	Measure Section and Power Supply	7-28
	7.7.5.1	Tuning Procedure for 11 MHz Peaking Control A22L7	7-28
	7.7.5.2	Current Limit Setup Procedure for Regulated +9 V Supply A7 (A7R3)	7-28
VIII		REPLACEABLE PARTS	
	8.1	Introduction	8-1
	8.2	Ordering Information	8-1
	8.3	Parts List Use	8-1
IX		SCHEMATIC DIAGRAMS	9-1/9-2
APPENDIX A		LOGIC FOR DETERMINING DECADE OUTPUT FREQUENCIES – AN AID TO FAULT ISOLATION AND TROUBLESHOOTING	A-1
	A.1	Introduction	A-1
	A.2	VCO Substitution	A-1
	A.3	Basic Synthesis Chain	A-1
APPENDIX B		SPUR ANALYSIS AND GUIDE FOR SPUR REDUCTION IN THE SYNTHESIZER PORTION OF THE CSM-1	B-1
	B.1	A4/A5 Deck Pair	B-1
	B.1.1	Summary of Predominant Spurs	B-1
	B.1.2	Procedure for Reduction of Predominant Spurs	B-1
	B.2	A2/A3 Deck Pair	B-11
	B.2.1	Summary of Predominant Spurs	B-11
	B.2.2	Procedure for Reduction of Predominant Spurs	B-19
	B.2.3	100 Hz, 1 kHz, 10 kHz Decade Spurs	B-21

ILLUSTRATIONS

Figure		Page
1-1	Communications Service Monitor Model CSM-1	1-0
1-2	Model CSM-1 Accessories	1-2
3-1	Controls, Indicators, and Receptacles, Model CSM-1	3-0
4-1	RF Fuse Disassembly	4-2
4-2	RF Fuse Element Details	4-2
5-1	Block Diagram, TXCO Buffer Amplifier, A1	5-4
5-2a	Carrier Set	5-12
5-2b	100% AM	5-12
5-2c	30% AM	5-12
5-3	Simplified Overall Block Diagram of the Model CSM-1	5-13/5-14
5-4	Block Diagram 100 Hz, 1kHz, 10kHz Decades and VCO, A2	5-15/5-16

Figure		Page
5-5	Block Diagram 100 kHz and 1 MHz Decade and Fixed Frequency Generator, A3 Assembly	5-17/5-18
5-6	Block Diagram 10 MHz Decade, A4 Assembly	5-19/5-20
5-7	Block Diagram 100 MHz Decade, A5 Assembly	5-21/5-22
5-8	Block Diagram Circuit Measure, A6 Assembly	5-23/5-24
6-1	Warm-up Test	6-6
6-2	Residual FM Test Setup	6-7
6-3	Setup to Measure Spurious Outputs	6-9
6-4	Setup to Measure Residual AM	6-10
6-5	Setup to Measure Output Level Accuracy	6-11
6-6	Setup to Measure Output Leakage	6-12
6-7	Setup to Measure Output Impedance and VSWR	6-13
6-8	Setup for Measuring Internal Modulation Frequencies	6-14
6-9	Setup for Measuring AM Accuracy and AM Distortion	6-14
6-10	Setup for Measuring the AM Bandwidth	6-15
6-11	Setup for Incidental FM Under 30% AM Test	6-16
6-12	Setup for Sweepwidth Test	6-16
6-13	Setup for Sweep Rate Test	6-17
6-14	Setup for Frequency Measurement Range Accuracy and Resolution Tests	6-18
6-15	Setup for AM Factor Measurement Range and Accuracy Test	6-19
6-16	Setup for Oscilloscope Mode Tests	6-20
7-1	Assembly Location, Model CSM-1 Isometric View, Cover Removed	7-2
7-2	Synthesizer Foldout, Step b, Front View	7-3
7-3	Synthesizer Foldout, Step b, Rear View	7-4
7-4	Synthesizer Foldout, Step c, A2/A3 Deck Separation	7-5
7-5	Synthesizer Foldout, Step d, Re-positioning of 4 Decks	7-6
7-6	Synthesizer Foldout, Step d, A4/A5 Deck Separation	7-8
7-7	Adjustment Control Location, A6 Deck	7-9
7-8	Adjustment Control Location, A5 Deck	7-11
7-9	Adjustment Control Location, A4 Deck	7-14
7-10	Sketch of Mixer Header to BNC Adapter	7-18
7-11	Detailed Block Diagram of A4/A5 Deck Pair	7-19/7-20
7-12	Detailed Block Diagram of Fixed Frequency Generator PC Board (A3A1) Showing Level Adjust Circuits and Output Levels	7-23/7-24
7-13	Adjustment Control Location, A3 Deck	7-25
7-14	Adjustment Control Locations, A2 Deck	7-26
9-1	Schematic Diagram, Amplifier, 10 MHz Buffer, A1	9-3/9-4
9-2	Schematic Diagram, VCO, A2A1	9-5/9-6
9-3	Schematic Diagram, 0.1 kHz, 1.0 kHz, 10 kHz Decade, A2A2, A2A3, A2A4	9-7/9-8
9-4	Schematic Diagram, Generator, Fixed Frequency, A3A1	9-9/9-10
9-5	Schematic Diagram, 100 kHz Decade, A3A2	9-17/9-18
9-6	Schematic Diagram, 1 MHz Decade, A3A3	9-19/9-20
9-7	Schematic Diagram, Input Diode Switch, Mixer and Filter, A4A1	9-25/9-26
9-8	Schematic Diagram, Multiplier X9 (90 MHz), A4A2	9-29/9-30
9-9	Schematic Diagram, Multiplier X9 (810 MHz), A4A3	9-31/9-32
9-10	Schematic Diagram, 930 MHz Amplifier, A4A4	9-33/9-34
9-11	Schematic Diagram, AM Modulator and Diode Switch, A4A5	9-35/9-36

ILLUSTRATIONS (Cont.)

Figure		Page
9-12	Schematic Diagram, Multiplier X7X2 (140 MHz), A4A6	9-37/9-38
9-13	Schematic Diagram, Multiplier X8X2 (80 MHz and 160 MHz), A4A7	9-39/9-40
9-14	Schematic Diagram, Multiplier X9X2 (90 MHz and 180 MHz), A4A8	9-41/9-42
9-15	Schematic Diagram, Multiplier X10X2 (200 MHz), A4A9	9-43/9-44
9-16	Schematic Diagram, Multiplier X11X2 (220 MHz), A4A10	9-45/9-46
9-17	Schematic Diagram, Gain Control Amplifier, A4A11	9-47/9-48
9-18	Schematic Diagram, Multiplier X10 (100 MHz), A5A1	9-49/9-50
9-19	Schematic Diagram, Input Diode Switch, A5A2	9-51/9-52
9-20	Schematic Diagram, Multiplier X8 (0.8 GHz), A5A3	9-53/9-54
9-21	Schematic Diagram, Multiplier X9 (0.9 GHz), A5A4	9-55/9-56
9-22	Schematic Diagram, Multiplier X10 (1.0 GHz), A5A5	9-57/9-58
9-23	Schematic Diagram, Multiplier X11 (1.1 GHz) A5A6	9-59/9-60
9-24	Schematic Diagram, Multiplier X12 (1.2 GHz), A5A7	5-61/9-62
9-25	Schematic Diagram, Multiplier X13 (1.3 GHz), A5A8	9-63/9-64
9-26	Schematic Diagram, Output Diode Switch, A5A9	9-65/9-66
9-27	Schematic Diagram, Final BBA, A5A10	9-67/9-68
9-28	Schematic Diagram, Measure IF/AF, A6A1	9-69/9-70
9-29	Schematic Diagram, Vertical Amplifier, A6A2	9-73/9-74
9-30	Schematic Diagram, Horizontal Amplifier, A6A3	9-75/9-76
9-31	Schematic Diagram, Audio Oscillator, A6A4	9-77/9-78
9-32	Schematic Diagram, Power Supply Including A7	9-79/9-80
9-33	Schematic Diagram, High Voltage Power Supply, A8	9-81/9-82
9-34	Schematic Diagram, 10 MHz Switch, A9	9-83/9-84
9-35	Schematic Diagram, 100 MHz Switch, A10	9-85/9-86
9-36	Schematic Diagram, 1 MHz Switch, A11	9-87/9-88
9-37	Schematic Diagram, Interconnect, A9, A10, A11	9-89/9-90
9-38	Schematic Diagram, 0.1, 1, 10 and 100 kHz Frequency Switches, A12, A13, A14, A15	9-91/9-92
9-39	Schematic Diagram, 0-100 Hz Pot, A16	9-93/9-94
9-40	Schematic Diagram, VERT POS/VERT GAIN Potentiometer HORIZ POS/HORIZ GAIN Potentiometer	9-95/9-96
9-41	Schematic Diagram, FOCUS/INTENSITY, SWEEP MODE/SWEEP RATE Assembly A18	9-97/9-98
9-42	Schematic Diagram, VERT MODE/CARR LEVEL and SWEEP WIDTH Assembly A19	9-99/9-100
9-43	Schematic Diagram, TONE FREQUENCY/TONE LEVEL, AMPLITUDE MODULATION Switch Assembly A20	9-101/9-102
9-44	Schematic Diagram, FUNCTION/AGC/MANUAL Switch, AUDIO MODE/VOLUME Switch/Pot. Assembly A21	9-103/9-104
9-45	Schematic Diagram, Amplifier, Broadband Measure, A22A1	9-105/9-106
9-46	Interconnection Diagram, Model CSM-1	9-107/9-108
A-1	CSM-1 Overall Frequency Synthesis System	A-2
B-1	Output Spectrum at X Port Input Connector of A4A1Z1 Mixer	B-4
B-2	Output Spectrum of A4A1 Module (at X Port of A4Z1 Mixer) as a Function of 1 MHz Dial Setting, Due to IM Products of the A4A1Z1 Mixer and 80 MHz and 90 MHz Feedthrough Spurs	B-5
B-3	Output Spectrum of A4A1 Module (at X Port of A4Z1 Mixer) as a Function of 1 MHz Dial Setting (or A4J Input Frequency) with 10 MHz Dial at 0, 2, 4, 6 or 8	B-6
B-4	Output Spectrum of A4A1 Module (at X Port of A4Z1 Mixer) as a Function of 1 MHz Dial Setting (or A4J Input Frequency) with 10 MHz Dial at 1, 3, 5, 7 or 9	B-7

ILLUSTRATIONS (Cont.)

Figure		Page
B-5	Output Spectrum at L Port Input at A4Z1 Mixer Showing Maximum Level of Spurs	B-8
B-6	Output Spectrum at X Port Input Connector of A4Z2 Mixer (Leakage Spurs of Unused Fixed Frequencies Not Shown)	B-9
B-7	Output Spectrum at L Port Input Connector of A5Z1 Mixer	B-10
B-8	A4/A5 Deck Pair Output Spectrum Due to 100 MHz Decade Spurs and Direct Feedthrough Signals for 360.0000 MHz Signal Frequency	B-12
B-9	A4/A5 Deck Pair Output Spectrum Due to Predominant 10 MHz Decade Spurs with Frequency Dials Set to 360.0000 MHz	B-12
B-10	A4/A5 Deck Pair Output Spectrum Due to 100 MHz Decade Spurs and Direct Feedthrough Signals for 215.0000 MHz Main Signal Frequency	B-13
B-11	A4/A5 Deck Pair Output Spectrum Due to Predominant 10 MHz Decade Spurs, with the Frequency Dials Set to 215.0000 MHz	B-13
B-12	1 MHz Decade Output Spectrum Due to Intermodulation Spurs	B-14
B-13	1 MHz Decade Output Spectrum Due to Fixed Frequency Signal Spurs or Leakage Spurs	B-15
B-14	Spectrum at TP-2 of 100 kHz Decade as Function of 100 kHz Dial Setting (100 Hz, 1 kHz, 10 kHz Dials All at Zero)	B-17
B-15	Output Spectrum at A2/A3 Deck Output (A3J4) Due to Intermodulation Products of the Two Mixers in the 100 kHz Decade as a Function of the 100 kHz Frequency Dial Position (with 1 MHz Frequency Dial set to "5")	B-18
B-16	Output Spectrum of A2/A3 Deck Pair at A3J4 Connector, Due to Fixed Frequency Signal Spurs or Leakage Spurs in 100 kHz Decade as a Function of 100 MHz Dial Setting, with the 1 MHz Dial set to "0"	B-22
B-17	100 Hz, 1 kHz, 10 kHz Decade Output Spectrum with Input Frequency at 2.1 MHz	B-23

TABLES

Table		Page
1-1	Supplied Accessories	1-1
2-1	Specifications for the Generate Function	2-1
2-2	Specifications for the Measure Function	2-3
2-3	Specifications for the Oscilloscope Function	2-4
2-4	Miscellaneous Specifications	2-5
3-1	Controls, Indicators and Receptacles	3-1
5-1	Variable Frequency Range	5-3
6-1	Test Equipment Requirements	6-2
7-1	Module Adjustment and Replacement Cross Reference	7-29
8-1	Code List of Manufacturers	8-2
8-2	Reference Designators	8-3
8-3	Abbreviations	8-3
8-4	Parts List for Main Assemblies and Chassis	8-4
8-5	Parts List for 10 MHz Buffer Assembly, A1	8-7
8-6	Parts List for Interconnect Assembly, A2	8-10
8-7	Parts List for VCO, 2.1 – 2.0 MHz and 21 – 20 MHz Assembly, A2A1	8-15
8-8	Parts List for 0.1 kHz, 1.0 kHz and 10 kHz Decade Assemblies A2A2, A2A3, A2A4	8-20
8-9	Parts List for Interconnect Assembly, A3	8-28
8-10	Parts List for Fixed Frequency Generator Assembly, A3A1	8-32
8-11	Parts List for 100 kHz Decade and Diode Switch Assembly, A3A2	8-50
8-12	Parts List for 1 MHz Decade and Diode Switch Assembly, A3A3	8-59

TABLES (Cont.)

Table		Page
8-13	Parts List for Interconnect Assembly, A4	8-74
8-14	Parts List for Input Diode Switch, Mixer and Filter Assembly, A4A1	8-79
8-15	Parts List for 90 MHz Multiplier Assembly, A4A2	8-87
8-16	Parts List for 810 MHz Multiplier Assembly, A4A3	8-90
8-17	Parts List for 930 MHz Amplifier Assembly, A4A4	8-92
8-18	Parts List for AM Modulator and Diode Switch Assembly, A4A5	8-94
8-19	Parts List for 140 MHz Multiplier Assembly, A4A6	8-101
8-20	Parts List for 80 MHz and 160 MHz Multiplier Assembly, A4A7	8-104
8-21	Parts List for 90 MHz and 180 MHz Multiplier Assembly, A4A8	8-107
8-22	Parts List for 200 MHz Multiplier Assembly, A4A9	8-110
8-23	Parts List for 220 MHz Multiplier Assembly, A4A10	8-113
8-24	Parts List for Gain Control Amplifier Assembly, A4A11	8-116
8-25	Parts List for Interconnect Assembly, A5	8-118
8-26	Parts List for 100 MHz Multiplier Assembly, A5A1	8-123
8-27	Parts List for Input Diode Switch Assembly, A5A2	8-126
8-28	Parts List for 0.8 GHz Multiplier Assembly, A5A3	8-128
8-29	Parts List for 0.9 GHz Multiplier Assembly, A5A4	8-130
8-30	Parts List for 1.0 GHz Multiplier Assembly, A5A5	8-132
8-31	Parts List for 1.1 GHz Multiplier Assembly, A5A6	8-134
8-32	Parts List for 1.2 GHz Multiplier Assembly, A5A7	8-136
8-33	Parts List for 1.3 GHz Multiplier Assembly, A5A8	8-138
8-34	Parts List for Output Diode Switch Assembly, A5A9	8-140
8-35	Parts List for Final Broadband Amplifier Assembly, A5A10	8-143
8-36	Parts List for Mother Board Assembly, A6	8-149
8-37	Parts List for Measure IF/AF Assembly, A6A1	8-151
8-38	Parts List for Vertical Amplifier Assembly, A6A2	8-163
8-39	Parts List for Horizontal Amplifier Assembly, A6A3	8-166
8-40	Parts List for Audio Oscillator Assembly, A6A4	8-168
8-41	Parts List for Power Supply Assembly, A7	8-170
8-42	Parts List for High Voltage Power Supply Assembly, A8	8-171
8-43	Parts List for 10 MHz Switch Assembly, A9	8-173
8-44	Parts List for 100 MHz Switch Assembly, A10	8-174
8-45	Parts List for 1 MHz Switch Assembly, A11	8-175
8-46	Parts List for 0.1 kHz, 10 kHz and 100 kHz Frequency Switch Assemblies, A12, A13, A14, A15	8-176
8-47	Parts List for 0-100 Hz Potentiometer Assembly, A16	8-177
8-48	Parts List for Vertical Position/Gain Potentiometer – Horizontal Position/ Gain Potentiometer Assembly, A17	8-178
8-49	Parts List for Focus/Intensity and Sweep Mode/Sweep Rate Assembly, A18	8-179
8-50	Parts List for Vertical Mode/Carrier Level and Sweep Width Assembly, A19	8-180
8-51	Parts List for Tone Frequency/Tone Level Amplitude Modulator Switch Assembly, A20	8-181
8-52	Parts List for Function Switch, Audio Mode/Volume Switch Potentiometer Assembly, A21	8-182
8-53	Parts List for Interconnect Assembly, A22	8-183
8-54	Parts List for Measure Broadband Amplifier Assembly, A22A1	8-184

Figure 1-1. Communications Service Monitor Model CSM-1

Section I

INTRODUCTION

1.1 GENERAL

This manual contains maintenance information for the Model CSM-1 Communications Service Monitor (Figure 1-1). The manual is divided into nine sections containing an introduction to the manual; specifications; controls, indicators and receptacles; installation instructions; theory of operation; minimum performance procedures; maintenance; replaceable parts; and schematic diagrams.

1.2 PURPOSE OF MANUAL

This Maintenance Manual is designed to provide the technical information required to align, maintain and repair the Model CSM-1 Communications Service Monitor.

1.3 APPROACH TO MAINTENANCE

1.3.1 Preventive Maintenance Interval

To assure instrument accuracy, check the Model CSM-1 performance using the Minimum Performance Procedures every 1000 hours of operation, or every six months if the instrument is used only occasionally.

1.3.2 Minimum Performance Procedures Defined

Minimum Performance Procedures are provided in Section VI to evaluate the overall performance of the various functions for accuracy within specified tolerances. They are performed with the instrument in its case with the front protective cover removed, and do not include any alignment or adjustments. The minimum Performance Procedures provide a basis for deciding on the need for functional analysis, alignment, adjustment and/or fault isolation.

1.3.3 Test Equipment Required

Table 6-1 in Section VI lists the test equipment required to check minimum performance parameters, alignment, fault isolation and maintenance. Minimum specifications for this test equipment are provided and specific units are suggested, listing manufacturer and model number.

1.3.4 Functional Analysis, Alignment, and Adjustment Defined

These procedures detailed in Section VII make full use of all accessible test points, including coaxial interconnect junctions, to check dc voltages, ac and audio voltages and rf signal frequencies and levels starting with the power supply and the two major sections, the measure section and the generate (synthesizer) section and progressing to individual modules. These procedures ensure correct signal levels and frequencies at all key circuit points and provide a logical basis for further fault analysis when required.

1.3.5 Fault Isolation Procedures Defined

These procedures, detailed in Section VII, provide a guide to further troubleshooting which may be required after Functional Analysis, Alignment and Adjustment have been performed.

1.4 SUPPLIED ACCESSORIES

The items listed in Table 1-1 are furnished with the Model CSM-1. Refer to Figure 1-2 for display of some of the accessory items.

Table 1-1. Supplied Accessories

Quantity	Device	Singer Part No.
2	Operator's Manual** †	1-500783-311
2	Maintenance Manual	1-500783-312
1	Antenna Assembly *†, consisting of:	2-005172-001
1	Adapter	1-910332-001
1	Adapter. Spade Lug	1-910333-001
1	Rod, Antenna	2-104044-001
1	Ball, Antenna	2-104046-001
1	Plug, Banana	1-910334-001
1	AC Power Cable, 7.5 Ft.†	1-910346-001
1	RF Cable, 3 Ft. *†	1-003159-001
1	Audio Cable, 2 Ft. *†	1-005367-001
1	Oscilloscope Hood †	3-103608-001
1	Protective Detachable Cover†	3-005300-001
1	Fuse, 1.0 amp.*†	1-924000-019
1	Fuse, 0.5 amp.*†	1-924000-014
1	RFA-20, RF Atten.*†	2-001355-001
1	RFF-2, RF Fuse Assy*†	4-005430-002

* Normally stored in the zippered bag within the protective detachable cover, refer to Figure 1-2.

** One operator's manual is stored in the zippered bag.

† Items shown in Figure 1-2.

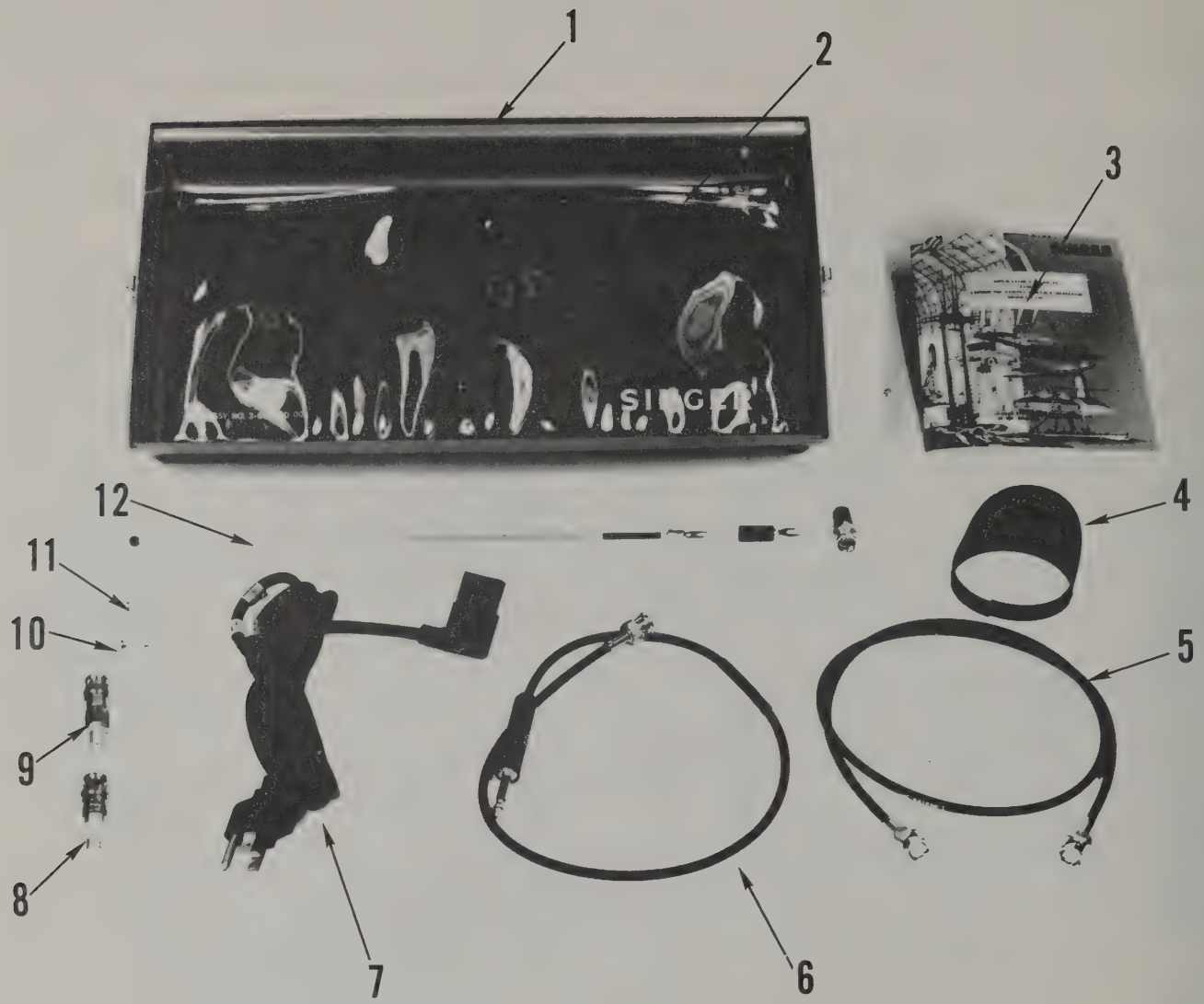

Item	Description	Item	Description
1	Protective Detachable Cover	7	AC Power Cable, 7.5 Ft.
2	Zippered Bag	8	RFA-20, RF Attenuator
3	Operator's Manual	9	RFF-2, RF Fuse Assembly
4	Oscilloscope Hood	10	Fuse, 0.5 Amp.
5	RF Cable, 3 Ft.	11	Fuse, 1.0 Amp.
6	Audio Cable, 2 Ft.	12	Antenna (Disassembled)

Figure 1-2. Model CSM-1 Accessories

Section II

SPECIFICATIONS

2.1 INTRODUCTION

This section of the manual contains specification information for the Model CSM-1. Specified parameters provided in the center column apply throughout the temperature range of 0°C to 50°C. Supplementary information located in the third column contains information such as a description of a feature, or limits or definitions of adjacent specified parameters in the second column.

2.2 SPECIFICATIONS

Tables 2-1 thru 2-4 contain specification data for the Model CSM-1.

Table 2-1. Specifications for the Generate Function

Characteristic	Specified Parameters	Supplementary Information
CW GENERATE FUNCTION		
Frequency	50 kHz to 512 MHz	
Range:		
Accuracy		
Synthesized mode:	1×10^{-6}	
Variable mode:	1×10^{-6} ± [(5 Hz at 25°C with temperature coefficient of 0.2 Hz/°C maximum) per 100 Hz of 0–100 Hz control range].	Refer to Table 5-1.
Resolution		
Synthesized mode:	100 Hz	from 50 kHz to 512 MHz.
Variable mode:	<1 Hz (1/2 division = 1 Hz).	0 to 100 Hz.
Stability		
Long term drift:	1×10^{-6}/yr. maximum.	Synthesized mode.
Medium term drift:	1×10^{-7}/mo. maximum.	
Residual FM:	25 Hz maximum.	Within a 3 kHz bandwidth.
Variable control range		(0–100 Hz control).
No frequency switch at V:		0 to 100 Hz
100 Hz switch at V:		0 to 1 kHz.
1 kHz switch at V:		0 to 10 kHz
10 kHz switch at V:		0 to 100 kHz.
100 kHz switch at V:		0 to 1 MHz.
Output Level		
Range:	-110 dBm to 0 dBm (0.7 μV to 224 mV rms).	
Accuracy:	±1 dB maximum	At -20 dBm at 250 MHz.
Flatness:	±1 dB over a 2:1 frequency range.	±2 dB maximum from 50 kHz to 512 MHz.
Attenuator		
Accuracy:		±2.0 dB referred to -20 dBm and from 50 kHz to 512 MHz.
Range:	110 dB total.	
100 dB step attenuator:	10 steps of 10 dB.	11 positions.
10 dB step attenuator:	10 steps of 1 dB.	11 positions.
Output Impedance:		50 ohms nominal
Output VSWR:	1.5:1 maximum.	
Output leakage:		Limited to allow receiver sensitivity measurement of 0.1 μV measured at a distance of 18 inches.

Table 2-1. Specifications for the Generate Function (Cont'd)

Characteristic	Specified Parameters	Supplementary Information
Spectral purity		
Harmonics:	At least 30 dB below carrier.	
Sub harmonics:	At least 50 dB below carrier.	
Non harmonics:	At least 50 dB below carrier.	
Close-in noise: (Noise Floor level test)	At least 65 dB below carrier in a 30 kHz bandwidth at a frequency of 200 kHz from the carrier.	As measured with a spectrum analyzer with 30 kHz bandwidth and 100 Hz video filter having noise floor 70 dBc minimum.
AM GENERATE FUNCTION		
AM indication:		CRT.
AM indication accuracy:	±8% of full-scale deflection.	
AM ranges:	0 to 30%, 3% max distortion.	(Internal and external at all output levels). 0 to 95%, 10% max distortion.
Incidental FM:	100 Hz +0.8 ppm maximum.	At 30% AM, ≤ 1 kHz mod. freq.
Internal modulating frequencies:	400 Hz ±5% or 1 kHz ±5%.	Selectable.
External modulating input		
Frequency range:	<50 Hz to >20 kHz.	±1 dB related to 1 kHz.
Impedance:	40 kilohm minimum.	
Sensitivity:	500 mV rms ±20%	for 30% AM.
FM GENERATE FUNCTION		
Peak deviation range:	0 to 100 kHz peak deviation	At 1% distortion (for modulating frequency <3 kHz).
Modulating frequency range:	<5 Hz to >3 kHz.	±3 dB related to 1 kHz.
Sensitivity:	100 mV rms ±10%	for 10 kHz peak deviation with 100 kHz switch at V position.
Input impedance:	600 ohms ±20%	
Carrier frequency accuracy:	1×10^{-6} ± [(5 Hz at 25°C with temperature coefficient of 0.2 Hz/°C maximum) per 100 Hz of 0–100 Hz control range].	
AUDIO GENERATE FUNCTION		Available at TONE OUTPUT receptacle. May be connected by external accessory cable to FM INPUT receptacle to provide frequency modulation. (Refer to FM generate function).
Frequency:	400 Hz ±5% or 1 kHz ±5%.	

Table 2-1. Specifications for the Generate Function (Cont'd)

Characteristic	Specified Parameters	Supplementary Information
Output level:	2.5 Vrms minimum	Open-circuit voltage with the TONE LEVEL control at maximum cw position.
Output impedance:	600 ohms ±10%	
SWEEP GENERATE FUNCTION		
Sweep width range:	0 to 1 MHz minimum.	With 100 kHz switch at V position (500 kHz to 512 MHz).
Sweep repetition frequency:	<10 Hz to >100 Hz.	
SWEPT RESPONSE DISPLAY FUNCTION		
Swept display linearity:	1.5% typical non-symmetry.*	Over 20% of the 0–100 Hz control range.
Detector sensitivity:	300 mV rms typical.*	For full-scale deflection on the CRT graticule.
Detector input impedance:	600 ohms nominal.*	

Table 2-2. Specifications for Measure Function .

Characteristic	Specified Parameters	Supplementary Information
CW MEASURE FUNCTION		
Sensitivity:	2 μV or better.	Minimum signal level required for measurement.
Operate level range:	<2 μV to >20 mV rms.	
Maximum input level:	500 mV rms maximum	This level will not cause damage to the instrument.
Input impedance:	50 ohms nominal.	
Frequency error indication range:	<1 Hz to >10 kHz.	Via beat lamp and beat tone.
Frequency		
Range:	50 kHz to 512 MHz.	
Accuracy		
Synthesized mode:	1×10^{-6}.	
Variable mode:	1×10^{-6} ± [(5 Hz at 25°C with temperature coefficient of 0.2 Hz/°C maximum) per 100 Hz of 0–100 Hz control range].	Refer to Table 5-1.
Resolution		
Synthesized mode:	100 Hz.	50 kHz to 512 MHz.
Variable mode:	<1 Hz (1/2 division = 1 Hz).	0 to 100 Hz.

Table 2-2. Specifications for Measure Function (Cont'd)

Characteristics	Specified Parameters	Supplementary Information
Stability		
Long term drift:	1 x 10^{-6}/yr. maximum	
Medium term drift:	1 x 10^{-7}/mo. maximum.	
Residual FM:	25 Hz rms maximum.	Within a 3 kHz bandwidth.
Variable control range		(0–100 Hz control).
No frequency switch at V:		0–100 Hz.
100 Hz switch at V:		0 to 1 kHz.
1 kHz switch at V:		0 to 10 kHz.
10 kHz switch at V:		0 to 100 kHz.
100 kHz at V:		0 to 1 MHz.
Headphone receptacle voltage:	2 V rms minimum.	Into a 10 ohm load.
AM MEASURE FUNCTION		
AM ranges:	0 to 30%, 0 to 100%.	
AM frequency range:	<50 Hz to >3 kHz.	
AM indication		CRT
Accuracy:	±8% of full-scale deflection.	
Sensitivity:	2 μV rms.	Minimum signal level required for measurement.
Audio output level		
Power to speaker:	500 mW minimum.*	Into an 8 ohm load.
Headphone receptacle voltage:	2 V rms minimum.	Into a 10 ohm load.

Table 2-3. Specifications for Oscilloscope Function

Characteristic	Specified Parameters	Supplementary Information
CRT size:		3" diameter nominal.
External vertical input		
Frequency response:	dc to >30 kHz.	3 dB down.
Sensitivity:	300 mV p-p ±10%	For full-scale deflection.
Impedance:	>70 kilohms	
Horizontal sweep		
Rate range:	<10 Hz to >5 kHz.	In two ranges.
Sweep type:		Recurrent.
Sync. type:		Automatic.
External horizontal input		
Frequency response:	<5 Hz to >30 kHz.	3 dB down.
Sensitivity	500 mV p-p maximum.	Per inch of deflection.
Impedance:	>500 kilohms.	

Table 2-4. Miscellaneous Specifications

Characteristics	Specified Parameters	Supplementary Information
Warm-up time:	10 s maximum.	
Switching time:	<1 ms.*	
Power requirements		
Operating voltage ranges:	108 V rms to 132 V rms.	And 216 V rms to 264 V rms.
Operating frequency:	57 Hz to 63 Hz.	
Power consumption:	75 W maximum.	51 W typical.
Operating temperature:	0 to +50°C (+32°F to +122°F).	
Altitude:	0 to 3048 m (0 to 10,000 ft).	Above mean sea level.
Relative humidity:	10% to 80%.	
Dimensions:		237 mm H, 427 mm W, 406 mm D (9.34 in H, 16.84 in W, 16.00 in D) (Less front cover).
Weight:		19.5 kg (43 lbs).
Paint:		FED-STD-595.
Front Panel:		Gray, No. 26440.
Case:		Textured blue No. 25189.

*Certain parameters are specified in section 2.2 that are not contractually required by the FAA. Nevertheless, they are included to more accurately characterize the performance of the unit. These supplementary specifications are indicated by an asterisk.

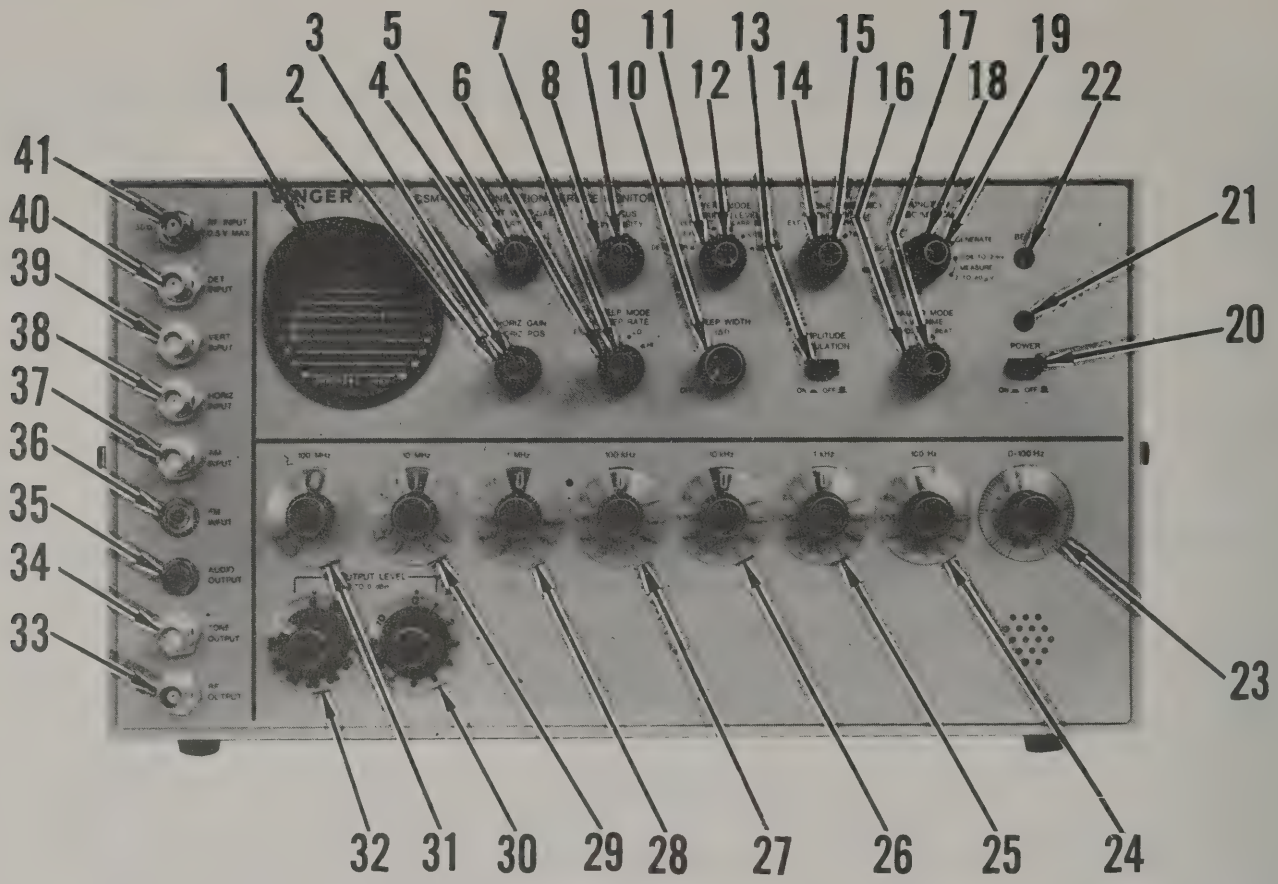

FRONT PANEL

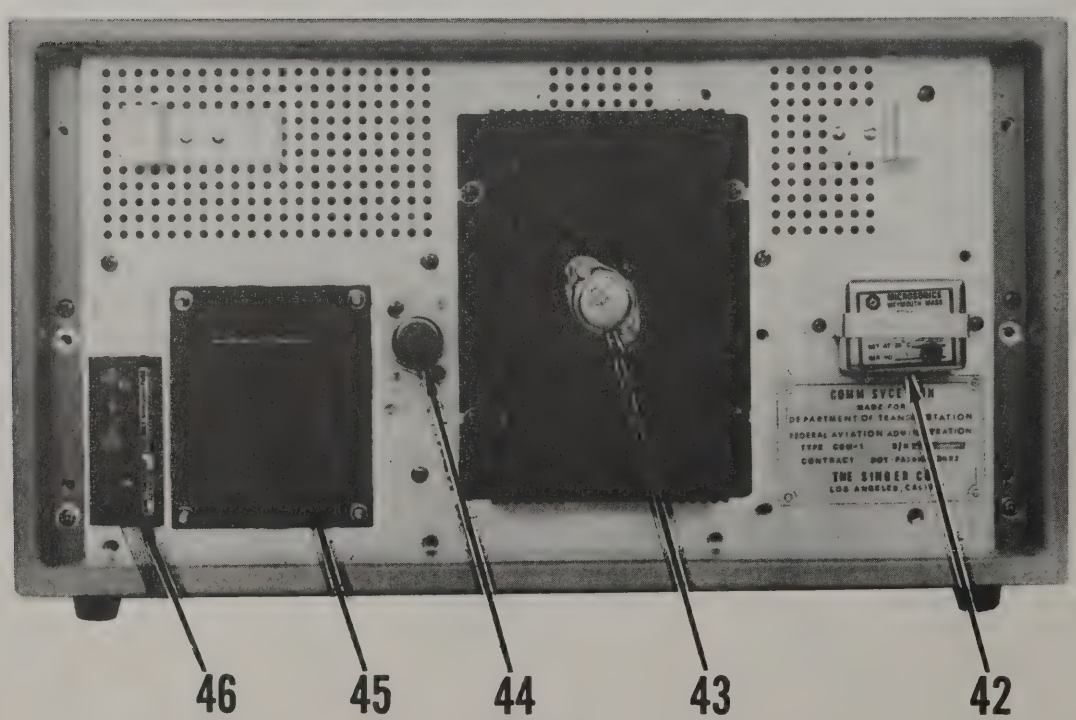

BACK PANEL

Figure 3-1. Controls, Indicators, and Receptacles, Model CSM-1.

Section III

CONTROLS, INDICATORS, AND RECEPTACLES

3.1 INTRODUCTION

The function of the controls, indicators, and receptacles of the Model CSM-1 are presented in this section of the manual. Refer to Table 3-1 and Figure 3-1. All items are located on the front and back panels of the instrument.

Table 3-1. Controls, Indicators, and Receptacles

Item	Panel Markings	Description	Function
1	AM % CARRIER SET VERTICAL SET	CRT (VI)	Provides the means of displaying the percentage of amplitude modulation of the incoming signal or is used to set up and monitor the percentage of AM in the AM generate mode.
2	HORIZ GAIN	Control (A17R3)	Provides the means for controlling the width of the CRT trace in both internal and external modes.
3	HORIZ POS	Control (A17R4)	Provides the means for controlling the horizontal position of the trace on the CRT screen.
4	EXT VERT GAIN	Control (A17R1)	Provides the means of controlling the displayed amplitude of the external signal applied to the VERT INPUT receptacle.
5	VERT POS	Control (A17R2)	Provides the means for controlling the vertical position of the trace on the CRT screen.
6	SWEEP MODE EXT HORIZ LO HI	3 position rotary switch (A18S1)	Provides the means for selecting the external sweep for the CRT or the internal sweep for both the CRT and the sweep generator functions in two ranges of sweep rate.
7	SWEEP RATE	Control (A18R3)	Provides the means for controlling the sweep rate from approximately 10 Hz to 5 kHz when used in conjunction with the SWEEP MODE switch.
8	FOCUS	Control (A18R1)	Provides the means for optimizing the focus of the electron beam on the CRT screen.
9	INTENSITY	Control (A18R2)	Provides the means for controlling the brightness of the CRT trace.
10	SWEEP WIDTH (Δ f) OFF	Control/ 2 position rotary switch (A19R1/A19S1)	Provides the means for controlling the swept frequency excursions above and below the center frequency and for switching the sweep off for normal fixed frequency operation.
11	VERT MODE DETECTOR EXT VERT SET CARR SET 100% AM 30% AM	6 position rotary switch (A19S2)	Provides the means for selecting the inputs to the vertical deflection system of the CRT. The inputs available are as follows: the internal detector which receives signals from the DET INPUT receptacle, the VERT INPUT receptacle, and the modulating audio signal in two ranges: 100% AM, and 30% AM. Two positions VERT SET and CARR SET provide the means for calibrating the modulation display.

Table 3-1. Controls, Indicators, and Receptacles (Cont'd)

Item	Panel Markings	Description	Function
12	CARRIER LEVEL	Control (A19R2)	Provides the means for calibrating the amplitude modulation display when the VERT MODE switch is set at the CARR SET position. Also provides manual control of the sensitivity in the MANUAL mode for the MEASURE function.
13	AMPLITUDE MODULATION ON ▬ OFF ▙	Push-push switch (A20S2)	Provides the means for internally disconnecting the internal AM or the external AM for rapid comparison of the modulated and unmodulated signal, when Item 18 is in the GENERATE mode.
14	TONE FREQUENCY EXT AM 400 Hz 1 kHz	3 position rotary switch (A20S1)	Provides the means for selecting either the internal 400 Hz or 1 kHz modulating signal, or the external modulating signal applied to the AM INPUT receptacle. Also selects the tone frequency (400 Hz or 1 kHz) available at the TONE OUTPUT receptable, Item 34.
15	TONE LEVEL	Control (A20R1)	Provides the means for controlling the level of generated amplitude modulation in both internal and external modes, and provides the means for controlling the level of the 400 Hz or 1 kHz audio signal at the TONE OUTPUT receptacle.
16	AUDIO MODE DEMOD BEAT	2 position rotary switch (A21S2)	Provides the means for selecting the source of the input to the audio circuitry. Either the recovered audio from the demodulated input signal may be selected or the beat tone difference between the unknown input signal and the frequency selected on the Model CSM-1 front panel.
17	VOLUME	Control (A21R1)	Provides the means for controlling the level of the audio from the internal speaker or a remote speaker or headphones, when Item 18 is in the MEASURE mode.
18	FUNCTION GENERATE MEASURE 0.06 to 2 mV 2 to 60 μV	3 position rotary switch (A21S1)	Provides the means for selecting either the generate mode or the measure mode, and the measure sensitivity.
19	AGC/MANUAL AGC MANUAL	2 position rotary switch (A21S3)	Provides the means for selecting the AGC mode to minimize the effects of signal variations (such as in AM measurements off the air) or the MANUAL mode for constant sensitivity (such as in spectrum monitor use).
20	POWER ON ▬ OFF ▙	Push-push switch (S1)	Provides the means for energizing the Model CSM-1.
21	POWER	Green indicator (CR2)	Provides the means for indicating when the Model CSM-1 is energized.
22	BEAT	Red indicator (CR3)	Provides the means for displaying the error signal in the measure mode of operation. (Flashes at the rate of the frequency of the error signal.)

Table 3-1. Controls, Indicators, and Receptacles (Cont'd)

Item	Panel Markings	Description	Function
23	0 – 100 Hz OUT – 0-1-2-3-4-5 -6-7-8-9-10	Control/ 2 position rotary switch (A16R1/A16S1)	Provides the means for varying the frequency continuously in five ranges of increments: 0 to 100 Hz (no frequency switch at V position). 0 to 1 kHz (100 Hz switch at V position). 0 to 10 kHz (1 kHz switch at V position). 0 to 100 kHz (10 kHz switch at V position). 0 to 1 MHz (100 kHz switch at V position).
24	100 Hz 0-1-2-3-4-5- 6-7-8-9-V	11 position rotary switch (A15S1)	Provides the means for changing the frequency in 100 Hz steps. The V position switches the 0–100 Hz control into the circuit, providing a continuously variable increment from 0 to 1 kHz.
25	1 kHz 0-1-2-3-4-5- 6-7-8-9-V	11 position rotary switch (A14S1)	Provides the means for changing the frequency in 1 kHz steps. The V position switches the 0–100 Hz control into the circuit, providing a continuously variable increment from 0 to 10 kHz.
26	10 kHz 0-1-2-3-4-5- 6-7-8-9-V	11 position rotary switch (A13S1)	Provides the means for changing the frequency in 10 kHz steps. The V position switches the 0–100 Hz control into the circuit, providing a continuously variable increment from 0 to 100 kHz.
27	100 kHz 0-1-2-3-4-5- 6-7-8-9-V	11 position rotary switch (A12S1)	Provides the means for changing the frequency in 100 kHz steps. The V position switches the 0–100 Hz control into the circuit, providing a continuously variable increment from 0 to 1 MHz.
28	1 MHz 0-1-2-3-4-5 -6-7-8-9	10 position rotary switch (A11S1)	Provides the means for changing the frequency in 1 MHz steps.
29	10 MHz 0-1-2-3-4-5- 6-7-8-9	10 position rotary switch (A9S2)	Provides the means for changing the frequency in 10 MHz steps
30	RF OUTPUT LEVEL -110 to 0 dBm 0-1-2-3-4-5- 6-7-8-9-10	11 position rotary switch (AT2)	Provides the means for changing the RF output level in 1 dB steps.
31	100 MHz 0-1-2-3-4-5	6 position rotary switch (A10S1)	Provides the means for changing the frequency in 100 MHz steps.
32	RF OUTPUT LEVEL -110 to 0 dBm 0-10-20-30-40-50- 60-70-80-90-100	11 position rotary switch (AT1)	Provides the means for changing the RF output level 10 dB steps.
33	RF OUTPUT 50 Ω	BNC receptacle (J2)	Provides the means for connecting the RF output to external equipment.

Table 3-1. Controls, Indicators, and Receptacles (Cont'd)

Item	Panel Markings	Description	Function
34	TONE OUTPUT	BNC receptacle (J9)	Provides the means for connecting the internal 400 Hz or 1 kHz audio tone to external equipment for audio testing or may be used for FM generation when connected to the FM INPUT receptacle.
35	AUDIO OUTPUT	Phone jack (J3)	Provides the means for connecting a speaker or headphones to monitor the recovered audio remotely.
36	FM INPUT	Phone jack (J4)	Provides the means for externally frequency modulating the Model CSM-1.
37	AM INPUT	BNC receptacle (J5)	Provides the means for externally amplitude modulating the Model CSM-1.
38	HORIZ INPUT	BNC receptacle (J6)	Provides the means for external horizontal drive when the CRT is used as a general-purpose oscilloscope.
39	VERT INPUT	BNC receptacle (J7)	Provides the means for external vertical drive when the CRT is used as a general-purpose oscilloscope.
40	DET INPUT	BNC receptacle (J8)	Provides the means for connecting the internal RF detector to the device under test so that the detector output may be displayed on the CRT when the VERT mode switch is at the DETECTOR position.
41	RF INPUT 0.5 V MAX 50 Ω	BNC receptacle (J10)	Provides the means for connecting the signal to be measured to the Model CSM-1.
42		TXCO (Y1)	Temperature compensated crystal oscillator from which all fixed frequencies are derived.
43		Power transistor (Q1)	+9 V dc power supply regulator transistor.
44		Power supply regulator (U1)	+5 V dc power supply regulator.
45		Power transformer (T1)	Power transformer for Model CSM-1.
46	120/240 V rms ±10% 60 Hz ±5% 120 V ac 1.0 AMP SLOW BLOW FUSE 240 V ac 0.5 AMP SLOW BLOW FUSE	3 pin receptacle (J1)	Provides the means for applying primary power to the instrument, changing the fuse, and converting between 120 V and 240 V rms operation.

Section IV

INSTALLATION INSTRUCTIONS

4.1 INTRODUCTION

This section of the manual contains instructions on preparing the instrument for operation.

4.2 EQUIPMENT SETUP

a. Place the Model CSM-1 on any convenient flat surface.

b. Remove the protective cover from the instrument panel. A zippered bag within the protective cover normally contains the following accessory items:

Antenna Assembly (3 separable parts)

RF Cable, 3 Ft.

Audio Cable, 2 Ft.

Spare Fuse, 1.0 Amp., Slow Blowing (for 120 V operation)

Spare Fuse, 0.5 Amp., Slow Blowing (for 240 V operation)

RF Attenuator, Model RFA-20

RF Fuse Assembly, 1/8 Amp., Model RFF-2

Two operator's manuals

c. The Model CSM-1 is shipped ready to operate on 108 V rms to 132 V rms, 57 Hz to 63 Hz. For 216 V rms to 264 V rms operation refer to Paragraph 4.3. Unwind the ac power cable from the clips on the back panel and plug into 120 V ac, 3-pin grounded mains supply.

d. Push the POWER switch to ON position. Illumination of the adjacent green lamp indicates that the Model CSM-1 equipment is ready for immediate use. The CRT heater requires about 15 seconds warmup time. If the CRT is not required, the trace may be inhibited by turning the BRIGHTNESS control fully counterclockwise.

e. The antenna attaches to the RF INPUT receptacle in a vertical position when in use. The antenna consists of three separable pieces. All three pieces are required for vertical positioning when the Model CSM-1 is resting on its feet on a horizontal surface. Loosen the binding post to adjust antenna position, then tighten. Two pieces are required for vertical mounting when the Model CSM-1 front panel is in a horizontal position. The assembled antenna may be stored in the bag.

f. The 3-foot RF cable may be used when connecting the RF OUTPUT or RF INPUT receptacle to equipment under test. Do not connect to a source of power.

CAUTION

Whenever the Model CSM-1 is connected to a transmitter-receiver, prevent accidental keying to avoid internal damage in the Model CSM-1. Use the Model RFF-2 RF Fuse Assembly at the RF INPUT or RF OUTPUT receptacle as a precaution.

g. The Model RFF-2 RF fuse assembly should be used at the RF INPUT and at the RF OUTPUT receptacle to protect the Model CSM-1 whenever presence of external voltages in excess of 0.5 V are possible.

h. The Model RFA-20 attenuator is used for sensitive receiver measurements where signal levels required are less than the minimum available from the Model CSM-1 RF OUTPUT. The attenuator is also used at the end of 50 ohm RF cable connected to the Model CSM-1 RF OUTPUT when the load has poor input VSWR or is other than 50 ohms.

4.3 240 V OPERATION

a. Remove the line cord from the receptacle on the back panel of the Model CSM-1.

b. Slide the transparent fuse cover to downward to expose the fuse.

c. Pull the FUSE PULL lever out and downward to release the fuse.

d. Remove the fuse.

e. With the FUSE PULL lever completely down, remove the printed circuit card by means of the hole in the end of the card.

f. Turn the printed circuit card over to expose the number 240 and re-insert.

g. Set the FUSE PULL lever completely downward and replace the fuse with 0.5 A slow blowing for 240 V rms operation.

h. Slide the transparent fuse cover upward.

i. Replace the line cord into the receptacle.

4.4 RF FUSE REPLACEMENT

Use the following procedure when replacing the fuse in the Model RFF-2 RF Fuse Assembly:

a. Verify failure of fuse by testing for continuity through the fuse assembly. If open-circuited, proceed to Step b.

b. To replace the fuse element, first loosen and remove the BNC female connector fittings using two open end wrenches with 7/16 inch openings.

c. After the BNC female fitting has been removed, the fuse element will be available for removal from either portion of the fuse assembly, see Figure 4-1. Remove the fuse element by hand or with pliers.

d. Insert a new fuse element and reassemble, using the reverse procedure. Be sure the fuse element leads are in line, symmetrical with the body, and are of the proper length, see Figure 4-2.

NOTE

Make RF Fuse Element from Singer P/N 1-924011-002 (Little Fuse No. 275.125).

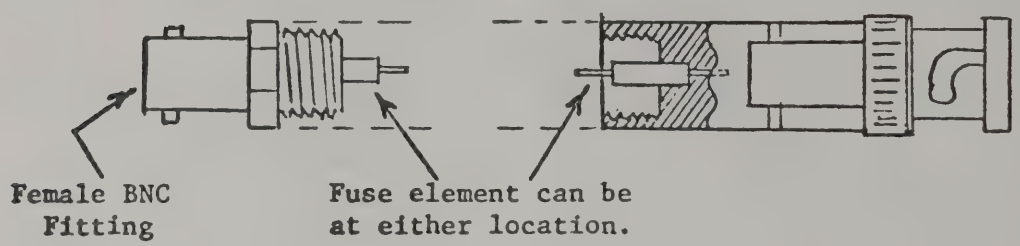

Figure 4-1. RF Fuse Disassembly

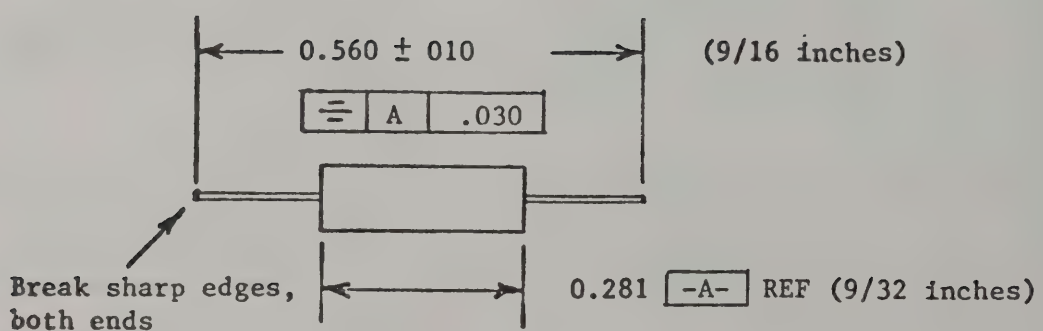

Figure 4-2. RF Fuse Element Details

Section V

THEORY OF OPERATION

5.1 INTRODUCTION

This section contains the theory of operation of the Model CSM-1 Communications Service Monitor. The information is presented in two sections: a basic discussion of the Simplified Overall Block Diagram, Figure 5-3, starting with Paragraph 5.2 describing the overall system operation; and a more detailed theory of operation based on Block Diagrams, and schematic diagrams, starting with Paragraph 5.3, describing the various modules and assemblies in the instrument in detail.

In describing the synthesizer, when a frequency range is expressed, the first frequency stated will be the one which corresponds with the lower end of the final output frequency range, also corresponding with 0 on the related front panel decade frequency switch or control dial.

5.2 BASIC THEORY OF OPERATION

The Model CSM-1 is a multi-purpose instrument which may be used as a signal generator from 50 kHz to 512 MHz, accurate in frequency to 1 ppm; as an RF frequency meter over the same frequency range; and as an amplitude modulation meter. The instrument provides swept-frequency capability by means of an internal Voltage Controlled Oscillator (VCO) providing sweep width to 1 MHz. It also provides a built-in oscilloscope for monitoring and measuring amplitude modulation. In conjunction with the internal sweep capability, the oscilloscope also serves as a spectrum monitor to display several channels in a communications band simultaneously. The oscilloscope may also be used for general applications. The Model CSM-1 contains an audio generator to provide two standard tones: 400 Hz and 1 kHz both for internal modulation and for external applications. The instrument can also generate FM signals using either the internal tone generator or an external source.

The frequency accuracy of the Model CSM-1 as a signal generator and as a frequency meter depends upon and originates with the TCXO (Temperature Compensated Crystal Oscillator) that provides a precise, stable output at 10 MHz ±1 ppm. Refer to Figure 5-3, the Simplified Overall Block Diagram. The TCXO output signal is applied to the A1 Buffer module which channels the 10 MHz signal into 5 branches. One branch goes to A3A1, the Fixed Frequency Generator (FFG) module, in which adding and subtracting mixer circuits and digital dividers generate 9 discrete frequencies: 2.1, 6.0, 6.1, 6.2, 6.3, 12.0, 12.2, 12.4 and 12.6 MHz. Further selective mixing, multiplying and dividing of these discrete signals and the original 10 MHz reference signal provide a final output frequency range of 50 kHz to 512 MHz in 100 Hz steps selected by seven panel mounted decade frequency switches.

The low decades A2A2 (100 Hz), A2A3 (1 kHz) and A2A4 (10 kHz) are essentially identical in design. They contain diode switching controlled by corresponding panel decade frequency switches to select 2 of 7 applied fixed frequencies. These along with an input frequency from 2.1 to 2.0 MHz are selectively mixed in each decade assembly and then divided by 10 to provided an output signal ranging in frequency from 2.1 to 2.0 MHz, in 10 kHz steps, depending on the setting of the corresponding decade frequency switch.

The 100 kHz assembly, A3A2, is almost identical in design to the three lower frequency decades, except that the generated signal is not divided by 10, therefore, the output frequency ranges from 21 to 20 MHz in 100 kHz steps controlled by the 100 kHz decade frequency switch.

The 10 kHz steps at the output of the 10 kHz decade (A2A4) and the 100 kHz steps at the output of the 100 kHz decade (A3A2) are translated directly into steps of frequency shift at the synthesizer output since there is no further frequency division following the 10 kHz decade, only mixing for frequency conversion. However, the effect on the synthesizer output frequency from the 10 kHz steps at the output of each of the lower decades is reduced by a factor of 10 by each following decade division. Therefore, the 10 kHz steps from the 1 kHz decade A2A3 produce only 1 kHz steps in the synthesizer output frequency while the 10 kHz steps from the 100 Hz decade are further divided by ten and produce only 100 Hz steps in the synthesizer output frequency.

A variable frequency from 2.1 to 2.0 MHz, controlled by the front panel "0-100 Hz" control, is available from A2A1, the voltage controlled oscillator (VCO). When the 0-100 Hz control is turned on (away from OUT) the variable frequency signal is selected, instead of the fixed 2.1 MHz signal, by a diode switch at the input of the 100 Hz decade A2A2. Thus, continuous frequency variation is available between the 100 Hz steps. The frequency range of the VCO is 100 kHz (2.1 to 2.0 MHz). Since the VCO is followed by 3 decade divisions (in A3A2, A3A3 and A3A4), its effect on the synthesizer output frequency is reduced by a factor of 1000. Therefore, the variable range at the output is 100 Hz.

Similarly, at the input to the 1 kHz decade A2A3, a diode switch actuated by setting the 100 Hz decade frequency switch to the V position on the dial, replaces the 2.1 to 2.0 MHz stepped frequencies from the 100 Hz decade A2A2, by the 2.1 to 2.0 MHz variable frequency from the VCO. Since this is followed by 2 decade divisions (in A3A3 and A3A4), the 100 kHz VCO range is divided by 100 to give a range of 1 kHz at the synthesizer output, providing continuous frequency variation between the 1 kHz steps.

Similarly, when the 1 kHz decade frequency switch is set to V, the 2.1 to 2.0 MHz VCO signal drives the input of the 10 kHz decade A2A4 replacing the stepped frequencies from the 1 kHz decade A2A3 producing a variable range of 10 kHz at the synthesizer output.

Similarly, when the 10 kHz decade frequency switch is set to V, the variable frequency range at the synthesizer output becomes 100 kHz since there are now no frequency dividers following the VCO.

When the 100 kHz decade frequency switch is set to V, then the 21 to 20 MHz stepped frequencies from the 10

kHz decade A2A4 are replaced by a 21 to 20 MHz variable frequency from the VCO. This 1 MHz range produces a 1 MHz range of output frequency shift since there are no intervening frequency dividers.

The 21 to 20 MHz output from A3A2, and a 21 to 20 MHz signal from the VCO, A2A1, as well as the 12.0, 12.2, 12.4 and 12.6 MHz fixed frequencies from A3A1, are supplied to the 1 MHz decade assembly, A3A3. The output of A3A3, in the frequency range from 210 to 200 MHz in 1 MHz steps is applied to the 10 MHz decade section A4. The input section A4A1 contains an amplifier, an input filter, a mixer and a diode switch (DS). Two additional inputs to A4A1 are an 80 MHz and a 90 MHz signal obtained respectively from the A4A7 and A4A8 multipliers, which receive 10 MHz inputs from the TCXO Buffer, A1. Mixing the diode switch-selected 80 MHz or 90 MHz input with the 210 to 200 MHz signal (from A3A3) results in an output of 130 to 110 MHz from the subtractive mixer that is applied to the X port of the A4Z1 mixer. Another 10 MHz branch from the TCXO Buffer, A1, is multiplied by 9 in A4A2; and the resulting 90 MHz is again multiplied by 9 in A4A3 to produce an output of 810 MHz delivered to the L port of mixer A4Z1.

Summing mixer A4Z1 combines the 130 to 110 MHz signal from A4A1 and the 810 MHz signal from A4A3 to provide an output of 940 to 920 MHz, which is amplified in A4A4 and then delivered to the L port of mixer A4Z2. Multipliers A4A6 through A4A10 produce, in order, 140, 160, 180, 200, and 220 MHz outputs which are applied to A4A5, the AM Modulator assembly, which also contains DS's controlled by the 10 MHz decade frequency switch. One of these frequencies is selected by the DS's to enter the X port of A4Z2. The difference frequency between this signal and the 940 to 920 MHz input from A4A4 results in an 800 to 700 MHz signal in 10 MHz steps which is amplified in gain controlled amplifier (GCA) A4A11 to become the output of the 10 MHz decade.

In the 100 MHz decade, UHF multipliers, A5A3 through A5A8 produce in order, 0.8, 0.9, 1.0, 1.1, 1.2, 1.3 GHz. The signal to these six UHF multipliers is controlled by a 6-position Input Diode Switch assembly, A5A2, which receives a 100 MHz signal from the X10 multiplier, A5A1. The A5A2 Input Diode Switch is ganged electronically with Output Diode Switch assembly, A5A9, also a 6-position switch. Thus, when one of the six UHF frequencies is selected by the front panel 100 MHz decade frequency switch, the corresponding input and output positions of the two 6-position diode switches, as well as the appropriate UHF multiplier module, are automatically selected to produce 100 MHz steps. The chosen UHF frequency is applied to the L port of mixer A5Z1. The difference frequency between this signal and the 800 to 700 MHz signal introduced into the R port from the 10 MHz decade forms the output signal at the X port of final mixer A5Z1.

When the instrument's FUNCTION switch is in the GENERATE position, the synthesized frequency, produced as a result of manual selection of appropriate positions of the seven decade switches and the variable dial, is amplified by A5A10, the final BBA (Broad Band Amplifier). With the FUNCTION switch in its GENERATE position, the selected frequency is available at a maximum level of 0 dBm (0.224 mV) at the RF OUTPUT receptacle. To keep this amplitude constant, an Automatic Level control circuit provides a dc feedback voltage to adjust the gain of the Gain Controlled Amplifier (GCA), A4A11. The synthesized RF output signal may be attenuated from 0 dBm to -110 dBm by means of a 100 dB attenuator having 10 dB steps, AT1, and a 10 dB attenuator having 1 dB steps, AT2.

When the FUNCTION switch is in either MEASURE sensitivity range position, control logic is applied to the appropriate decade switches automatically to add 11 MHz to the frequency of the synthesized signal, providing a local oscillator (LO) signal. This LO signal is heterodyned with the RF INPUT signal in the MEASURE mixer in assembly A5A11, and amplified forming an 11 MHz IF signal.

This IF signal is applied to the input of the A6A1 module in the measure section A6 where it is further amplified, filtered and converted to 1 MHz and demodulated in an AM detector. The recovered audio is amplified for visual observation and AM measurement on a CRT and for aural monitoring on the built-in speaker or on headphones via the AUDIO OUTPUT receptacle.

The A6A1 module contains a mixer that beats the 1 MHz signal with a 1 MHz synthesized signal. The difference frequency out of this mixer is amplified and applied to an LED BEAT light that flickers (or beats) at the rate of the difference frequency. The amplified difference signal may also be applied to the audio circuit via the AUDIO MODE switch for aural determination of the difference frequency.

The internal Audio Generator, A6A4, provides standard reference frequencies of 400 Hz and 1 kHz. Either of these audio signals is available at the front panel TONE OUTPUT receptacle with level controllable by the TONE OUTPUT control. Either tone may be selected, or an external AM INPUT audio signal may be selected, to amplitude modulate the generated RF signal up to 95%. Using the built-in oscilloscope, the Model CSM-1 is capable of serving as an amplitude modulation meter, measuring AM of an external signal or monitoring the AM of the generated signal in two ranges: 0 to 30% and 0 to 100%. The oscilloscope with a 3-inch CRT is electrostatically deflected by horizontal and vertical deflection amplifiers, A6A3 and A6A2. Front panel controls are provided for gain, centering, intensity, and focus. Internal adjustments are provided for astigmatism and vertical gain calibration.

A front panel receptacle marked DET INPUT is connected to an internal RF detector. The purpose of this detector is to permit the detected output from a device being tested at high frequency to be displayed on the Model CSM-1 oscilloscope when the VERT MODE switch is at its DETECTOR position.

An input receptacle marked HORIZ INPUT permits signals over a frequency range of approximately 5 Hz to 30 kHz to drive the horizontal deflection amplifier of the CRT. Similarly, the front panel VERT INPUT permits signals from dc to >30 kHz to drive the vertical deflection amplifier of the CRT so that the oscilloscope is available for general purpose applications.

Assembly A6A3 contains a sawtooth generator which provides the normal horizontal sweep for the CRT display from 10 Hz to 5 kHz in two ranges. The sawtooth output may also be used to modulate the VCO, A2A1, providing a swept-frequency generator with a sweep width variable from 0 Hz to 1 MHz, using the front panel decade switches and 0-100 Hz variable dial.

When the SWEEP WIDTH switch is turned off, an external audio signal applied to the FM INPUT will modulate the VCO, and thus a frequency modulated signal is available from the instrument's RF OUTPUT. One of the standard tones, 400 Hz or 1 kHz, may be brought out from the TONE OUTPUT receptacle and connected to the FM INPUT to modulate the VCO and furnish an FM output signal with deviation up to 100 kHz and beyond, controlled by the front panel TONE LEVEL control.

5.3 DETAILED THEORY

5.3.1 10 MHz Buffer, A1

The output of the 10 MHz Temperature Controlled Crystal Oscillator (TCXO) is applied to the 10 MHz Buffer Amplifier, assembly A1. Refer to Figures 5-1 and 9-1. The purpose of the Buffer Amplifier is to provide separate 10 MHz signals at five output connectors, J2 through J6, with adequate filtering and isolation from each other. The 10 MHz signal output from the emitter of Q1 passes through a low pass filter and applied to separate, untuned, emitter follower amplifiers Q2 and Q3. The 10 MHz output from the collector of Q1 is applied to three separate, essentially identical tuned amplifiers Q4, Q5 and Q6. The five 10 MHz outputs go to several assemblies for generating other signal frequencies and for reference purposes.

5.3.2 100 Hz, 1 kHz, 10 kHz Decades and VCO, A2

The A2 assembly consists of the VCO (Voltage Control Oscillator) assembly (A2A1), the 100 Hz decade (A2A2), 1 kHz decade (A2A3), and 10 kHz decade (A2A3). Refer to Block Diagram Figure 5-4.

5.3.2.1 VCO Module, A2A1

In the Model CSM-1, the VCO (voltage controlled oscillator) A2A1 serves three purposes:

1. It provides continuous frequency variation, manually controllable by the 0 to 100 Hz control, for resolution between the 100 Hz steps from the basic synthesizer. Variable increments may be introduced in five ranges as shown in Table 5-1.

Table 5-1. Variable Frequency Range

Highest Frequency Switch Set to V	0-100 Hz Dial Setting	Output Frequency Variation
None	OUT	VCO off: 100 Hz steps
None	0 to 10	0 to 100 Hz
100 Hz	0 to 10	0 to 1 kHz
1 kHz	0 to 10	0 to 10 kHz
10 kHz	0 to 10	0 to 100 kHz
100 kHz	0 to 10	0 to 1 MHz

2. It provides automatically swept frequency capability when the SWEEP WIDTH control is turned on. The sawtooth waveform from the A6A3 horizontal deflection section, Paragraph 5.3.6.3, is also applied to the VCO to provide swept frequency excursions adjustable by the SWEEP WIDTH control.

3. External audio modulating signals through the front panel FM INPUT receptacle, at frequencies from <5 Hz to >3 kHz, may be used to modulate the VCO when the SWEEP WIDTH (Δ F) switch is turned off, and the FUNCTION switch is at its GENERATE position.

The oscillator gain stage Q1 is resonated by a tank circuit comprising L2 and the combined capacitance of C8, C10, C11 and varactor diode CR2. Refer to schematic, Figure 9-2. A dc control voltage from the front panel 0-100 Hz variable frequency dial is applied thru J2, R7, CR1 (temperature compensation) and L2 to back bias varactor CR2. The tuning range is 21 to 20 MHz, corresponding to 0 and 10 respectively on the 0-100 Hz variable frequency dial. J-FET buffer Q2 presents a high input impedance at the capacitive tap (C10 and C11) on the tank circuit to minimize loading and maintain high Q for stability. The source output of Q2 provides positive feedback thru C6 to Q1 emitter to sustain oscillation. The drain output of Q2 drives emitter follower buffer Q3 and high pass filter C15, L4, C16. Then the signal is branched into two channels; (1) amplifier Q4 and buffer Q5 providing 21 to 20 MHz output at J5, controllable in level by R28, and (2) amplifier Q7, buffer Q8, and decade frequency divider U1, providing 2.1 to 2.0 MHz output at J6, controllable in level by R41.

When the 100 kHz frequency dial is set to V, a "low" logic signal at J4 turns on logic switch Q6 which powers Q5 and activates the J5 output. This variable frequency 21 to 20 MHz signal replaces the synthesized output from A3A2 (100 kHz decade), to drive A3A3 (1 MHz decade). In this mode, logic switch Q9 is turned on, disabling U1 by applying a "low" at pin 13 (reset), to inhibit the J6 output, since it is not required when J5 is active.

When the 100 kHz frequency dial is not at V, and any one of the lower decade frequency dials is set to V, a "high" logic signal at J4 turns logic switches Q6 and Q9 off, turning on U1 to activate the J6 output. This variable frequency 2.1 to 2.0 MHz signal replaces the synthesized (fixed frequency) signal at the appropriate decade interface, according to which frequency dial is at V. In this mode, the turnoff of Q6 also removes power from Q5 to inhibit the J5 output, since it is not required when J6 is active.

When the VCO is not required, as signified by turning the 0-100 Hz dial to the OFF position, the rotary switch on this dial interrupts the +9V supply to J1, disabling oscillator Q1 to eliminate extraneous signals. Logic switch Q10 senses the "low" state at J1 and transmits a "high" logic state thru J9 to the diode switch at the input of A2A2 (100 Hz decade), selecting a fixed 2.1 MHz signal as the input to this decade.

When the VCO is required, as signified by turning the 0-100 Hz dial to its active range (0 to 10), the switch closure applies +9V to J1, activating oscillator Q1. The logic state of Q10 reverses to select the variable frequency 2.1 to 2.0 MHz VCO signal as the input to A2A2 (100 Hz decade).

A modulating signal input, J3, is dc coupled to the anode of varactor CR2 thru R8 and L3 to provide swept frequency or FM capability as selected by the front panel controls. The parallel resonance of L3 and C9 suppresses oscil-

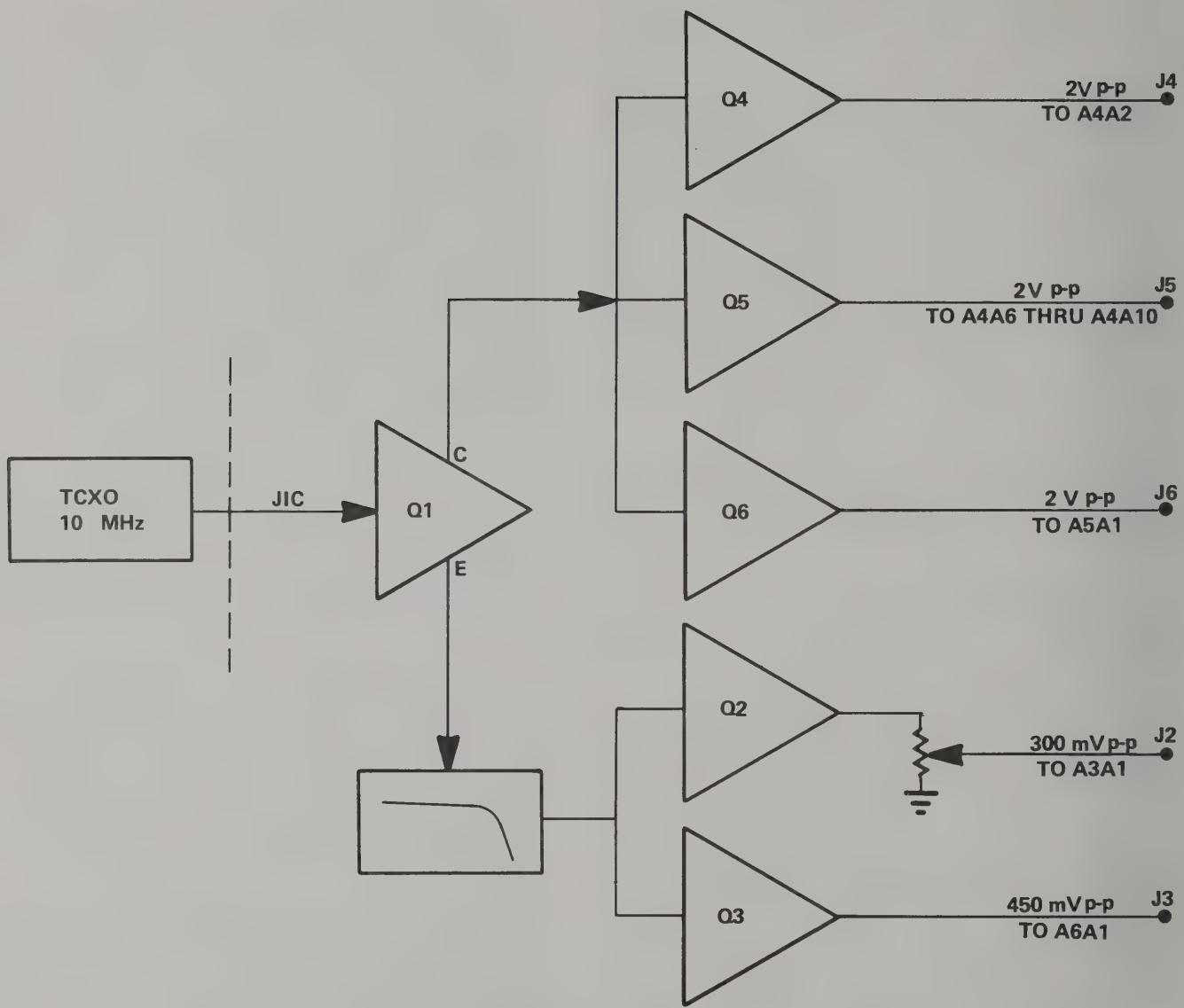

Figure 5-1. Block Diagram, TCXO Buffer Amplifier, A1

lator signal leakage to the control panel wiring thru R8 and J3. The time constant formed mainly by C5 and R8 rolls off the high frequency audio response of the modulating signal input channel at approximately 10 kHz.

5.3.2.2 Low Frequency Decades, A2A2, A2A3 and A2A4

The A2A2, A2A3, A2A4 modules are identical except for the decade switching associated with each module. Hence, the following description of A2A2 applies to all three modules. Refer to Block Diagram Figure 5-4 and Schematic Figure 9-3. A common input to each of these modules is the variable 2.1 to 2.0 MHz signal from the VCO module. The selection of this variable 2.1 to 2.0 MHz signal or a synthesized 2.1 MHz signal is made by a diode switch consisting of CR1 thru CR6, in accordance with switching logic initiated by the 0-100 Hz front panel variable frequency dial. Logic from the 100 Hz decade front panel frequency switch, A15, energizes and closes one of four diode switches, CR7 thru CR18, to select one of the synthesized frequencies 6.0, 6.1, 6.2 or 6.3 MHz from the fixed frequency generator A3A1, refer to Paragraph 5.3.3.1. The selected frequency in the 2.0 to 2.1 MHz range is mixed in a summing mixer with the selected 6.0, 6.1, 6.2 or 6.3 MHz frequency; and the output of 8.4 to 8.0 MHz, after filtering and amplification, is mixed in a second summing mixer with a 12.0, 12.2 or 12.6 MHz signal obtained from the fixed frequency generator A3A1. The desired frequency is selected by logic initiated by the 100 Hz decade front panel frequency switch that energizes and closes one of three diode switches, CR19 thru CR27.

Output of the second summing mixer is 21 to 20 MHz, which is then divided by a ÷ 10 divider to deliver a 2.1 to 2.0 MHz range of signals at the output. See Appendix A.

5.3.3 100 kHz, 1 MHz Decades and Fixed Frequency Generator, A3

The A3 assembly consists of the Fixed Frequency Generator (A3A1), the 100 kHz decade (A3A2), and 1 MHz decade (A3A3). Refer to Block Diagram Figure 5-5.

5.3.3.1 Fixed Frequency Generator, A3A1

The 10 MHz Buffer Amplifier output signal from J2 of A1 is applied to the input connector, J2, of the Fixed Frequency Generator, A3A1. Refer to the Block Diagram and the Schematic Diagram Figure 9-4. The Fixed Frequency Generator is designed to derive 9 new fixed frequency signals from this 10 MHz signal. The first operation is typical of three other mixer/divider operations in the A3A1 generator assembly. Into the L port of an active mixer is fed the 10 MHz input. Into the R port of the same mixer is a 2 MHz signal, obtained by dividing the original 10 MHz by 5. From this mixer are derived sum and difference frequencies, 12 MHz and 8 MHz respectively. The 12 MHz signal is the first required fixed frequency.

As shown in the Block Diagram, the 12 MHz signal is distributed by four emitter followers having unity gain. One follower delivers a 12.0 MHz signal at J6. From a second emitter follower the signal goes into a dual divider, with division by 5 producing a 2.4 MHz output, and division by 2 resulting in a 6.0 MHz signal which is the second required fixed frequency.

The 2.4 MHz signal is mixed with the 10 MHz input to produce 12.4 MHz and 7.6 MHz, again sum and difference frequencies. The 12.4 MHz signal is the third required fixed frequency and is available at J3. The 12.4 MHz signal is also divided by 2 to obtain 6.2 MHz, the fourth fixed frequency.

The 7.6 MHz signal is mixed with 5 MHz, obtained by dividing 10 MHz by 2, and the 12.6 MHz sum provides the 5th fixed frequency. From the 12.6 MHz signal are derived, through division by 2, 3 and 6, the corresponding 3 output frequencies: 6.3 MHz, the 6th desired fixed frequency; a 4.2 MHz signal applied to another mixer; and a 2.1 MHz output, the 7th fixed frequency. By mixing the 4.2 MHz signal with 8 MHz, the 8th fixed frequency of 12.2 MHz is produced. This latter is divided by 2 to generate 6.1 MHz, the 9th required fixed frequency.

In each of these frequency generation circuits, employing mixers and dividers, amplifiers are used. Some of these amplifiers are drivers preceding the mixers and include low pass filters to eliminate undesired harmonics. Other amplifiers are used after the mixers to filter as well as amplify signals of the desired frequencies. Typically, these active mixers have a gain of 12 dB. Filtering in the post-mixer amplifiers is achieved by tuned output networks. Each of these stages amplifies the required frequency and attenuates undesired sidebands.

The unity gain amplifiers shown in the block diagram, are emitter followers used as buffers. They attenuate feedback of undesired signals into the nine desired fixed frequencies produced in Assembly A3A1.

5.3.3.2 100 kHz Decade, A3A2

Design of the 100 kHz module, A3A2 is very similar to the three lower frequency decades described in Paragraph 5.3.2.2. The difference is that the summed frequency range obtained from the second mixer, 21 to 20 MHz, is not divided by 10 just prior to the output. Refer to Figures 5-5 and 9-5.

Again the choice of the two inputs to the 2-position diode switch shown in the block diagram of A3A2 is controlled by the manual front panel switch used for selecting frequencies in the previous decade – in this case, the 10 kHz switch. When this latter switch is in its V position, the variable 2.1 to 2.0 MHz signal from the VCO module is selected. Otherwise, the 2-position switch selects a synthesized 2.1 to 2.0 MHz, the output from the previous decade, A2A4.

5.3.3.3 1 MHz Decade, A3A3

In the design of the 1 MHz decade, the same principles are applied as in the lower frequency modules, but the frequencies selected are higher. The 2-position diode switch at the input of A3A3, the 1 MHz module, selects between the variable 21 to 20 MHz provided by the VCO module and the synthesized 21 to 20 MHz from the 100 kHz decade. Refer to Figures 5-5 and 9-6. The selection made by the 2-position diode switch is controlled by the front panel 100 kHz decade frequency switch so that when this switch is in the V position, the VCO variable frequency input is chosen. The selected 21 to 20 MHz signal goes through a low pass filter with a cut-off just above 21 MHz to reject harmonics and higher frequency noise. The signal then passes through a 6 dB attenuator, and enters the first doubly balanced mixer of the A3A3 assembly.

As shown in the Block Diagram, the filtered 21 to 20 MHz goes into the X port of the mixer. Applied to this mixer's L port is a frequency of 60, 61, 62 or 63 MHz obtained by selecting one of the fixed frequency signals, 12.0, 12.2, 12.4 and 12.6 MHz, multiplying it by 5, and then amplifying and filtering the multiplied signal to attenuate sidebands.

Mixing these two frequency ranges results in a sum of 84 to 80 MHz at the mixer R port. This signal goes through a bandpass filter tuned for this frequency band, then a tuned amplifying and filtering stage, and a 6 dB attenuator. This conditioned signal is fed into the X port of a second summing mixer.

The other input to this mixer is a 120, 122 or 126 MHz signal. This frequency range is derived by selecting one of the fixed frequency signals, 12.0, 12.2 or 12.6 MHz, multiplying by 10, passing the resulting signal through a bandpass filter to attenuate sidebands, and then applying it to the mixer L port.

The summed output of the second mixer provides a frequency range of 210 to 200 MHz in 1 MHz steps which goes through a bandpass filter and an amplifying/filtering stage. The filtered 210 to 200 MHz output is applied to the 10 MHz decade in the A4 Assembly.

5.3.3.4 Measure Mode Frequency Offset

When the FUNCTION switch is in the GENERATE position, the synthesizer output frequency corresponds with the settings of the frequency switches. When the FUNCTION switch is in the MEASURE mode, the overall synthesizer frequency output is advanced by 11 MHz. This is accomplished by providing additional switch contacts in the 1 MHz, 10 MHz and 100 MHz decade switches and diode logic to select an output frequency always 11 MHz above the frequency switch dial setting.

5.3.4 10 MHz Decade, A4

The A4 assembly consists of an input filter, mixer, diode switch (A4A1), two X9 multipliers (A4A2 and A4A3), 940 to 920 MHz amplifier (A4A4). AM modulator and diode switch (A4A5), five multipliers (A4A6 thru A4A10), and gain control amplifier (A4A11). Refer to Block Diagram Figure 5-6.

5.3.4.1 Mixers and Multipliers A4A1 thru A4A4

The 210 to 200 MHz signal from the 1 MHz Decade, A3A3, is brought into the A4A1 module thru J6, and amplified and filtered before being applied to the L port of a doubly balanced subtractive mixer. Refer to Figure 5-6. There is a choice of two inputs to the X port of this mixer. Both are similarly generated, by multiplier sections of A4A7 (X8) and A4A8 (X9) to produce the two desired frequencies 80 MHz and 90 MHz from the TCXO 10 MHz input. Refer to schematics, Figures 9-13 and 9-14.

Operation of each multiplier section is essentially identical. The 10 MHz signal is amplified and then multiplied in a transistor circuit with LC output network tuned for 80 MHz or 90 MHz. After multiplication the signal goes through a bandpass filter, a tuned amplifier, and a second bandpass filter. These filters are sharply tuned for the required frequency and to attenuate sidebands including ±10 MHz from the crystal oscillator source. Following the second filter, the signal is tapped off a potentiometer for adjusting the signal level. It is then delivered to two diode switches, one for 80 MHz and one for 90 MHz.

The selection of the 80 or 90 MHz signal is accomplished by control logic produced by the 10 MHz front panel decade frequency switch. Switching manually to the 80 MHz position, for instance, provides a ground for the 80 MHz diode switch, closing the switch so that the 80 MHz signal is passed through the diode network. Meanwhile the 90 MHz signal remains blocked out. The selected 80 MHz or 90 MHz signal goes through a low pass filter to the X port of the A4A1 subtractive mixer. Subtracting these frequencies from the 210 to 200 MHz signal in the mixer results in an output of 130 to 110 MHz from the mixer's R port. This signal is amplified and goes through a filter with a pass band of 130 to 110 MHz to attenuate all undesired sidebands. Now the 130 to 110 MHz is applied to the X port of the A4Z1 summing mixer.

The second input to this summing mixer is an 810 MHz signal. The generation of 810 MHz is accomplished as indicated by the diagrams for modules A4A2 and A4A3. In A4A2, the buffered TCXO 10 MHz signal is multiplied by 9 to produce 90 MHz, and then in A4A3, this 90 MHz is multiplied by 9 to achieve the desired 810 MHz. In both of these multiplier modules there is a succession of bandpass filters and amplifiers designed to produce a signal with unwanted spurious signals suppressed.

The 810 MHz is mixed in A4Z1, a doubly balanced additive mixer, with the 130 to 110 MHz from A4A1 to produce a sum of 940 to 920 MHz, which is applied to module A4A4. In this module are three tuned amplifiers and three bandpass filter sections designed to provide a clean 940 to 920 MHz signal output, with all spurious signals adequately suppressed.

The 940 to 920 MHz signal is applied to the L port of a doubly balanced subtractive mixer, A4Z2. The X port receives a signal of 140 to 220 MHz from A4A5, the AM Modulator and Diode Switch Assembly. The function of this module is to select the output from one of the five multipliers, A4A6 to A4A10, and to amplitude modulate the selected signal when required. In addition, the module provides a monitor output for determining the percentage modulation in the GENERATE mode of the FUNCTION switch.

5.3.4.2 Multipliers A4A6 through A4A10

The 140 to 220 MHz signal produced by multiplier modules A4A6 through A4A10 is performed by a two-step multiplication of the basic 10 MHz TCXO signal. Thus, there are X7X2, X8X2, X9X2, X10X2 and X11X2 modules used to obtain 140, 160, 180, 200 and 220 MHz respectively. Each module contains two tuned amplifier stages and four bandpass filter networks. Refer to schematics, Figures 9-12 thru 9-16.

5.3.4.3 AM Modulator and Diode Switch Module, A4A5

The function of this module is to select the output from one of the five multipliers, A4A6 to A4A10, and amplitude modulates the selected signal, thereby providing the "X" port signal to the A4Z2 mixer. In addition, the module provides a monitor output for monitoring the modulation percentage in the GENERATE mode, and, switches +8.7 V dc to power the selected multiplier. Refer to Figures 5-6 and 9-11.

The input diode switch consists of five identical sections made up of a control transistor and three diodes. A typical section is the 220 MHz switch made up of Q2, CR3, CR4 and CR5. In the "off" condition, Q2 has +9 V dc applied to both emitter and base, turning the transistor off. Q4 provides a fixed +3.5 V dc bias to the anode of diode CR5. Therefore CR5 is biased on and diodes CR3 and CR4 are biased off. CR4 is biased off because there is always one diode switch on at any one given time. The combination of "off" series diodes and an "on" shunt diode results in a high attenuation signal path. To turn the switch "on", the base of the control transistor Q2 is grounded through a 1.5 kilohm resistor, R31. This causes the transistor to turn on full, raising the collector to approximately 8.7 Vdc. This forward biases CR3 and CR4, and reverse biases CR5, giving a low attenuation signal path to the "L" port of the modulator, Z1. At any given time, one of the five diode switches will be turned on and the remainder turned off by the 10 MHz decade switch. The 8.7 Vdc from the collector of the "on" switch control transistor is also connected to an output jack. These outputs from the five diode switch sections are used as the supply voltages for the five multiplier chains, A4A6 thru A4A10. Therefore, only the multiplier feeding the "on" diode switch is operating at any given time. This serves to reduce possible spurious outputs due to the unused multipliers.

The selected signal is applied through a 2 dB pad to the "L" port of modulator Z1. The signal level at this point is nominally -1 dBm. Modulator Z1 acts as a current controlled attenuator with a nominal attenuation of 16 dB. The attenuation is controlled by the signal applied to "X" port, while the output is taken from the "R" port. Thus the 50 Hz to 20 kHz signal applied to the "X" port acts to amplitude modulate the selected signal.

The AM modulator circuit consists of U1, CR1, U2, Q1, CR19 and Z1. A dc current from the -9 Vdc source, adjustable by R5, is coupled through R5, R4 and R3 to the inverting input of summing amplifier U1. Also, the modulating audio signal from J2 is direct coupled to the inverting input of summing amplifier U1 through R1.

The audio modulating signal from the output of U1, including its dc signal component, is direct coupled to the inverting input of leveling loop amplifier U2 via R8, CR1 and R13. Diode CR1 acts as a temperature compensating diode to offset the temperature coefficient and nonlinearity of RF level detector diode CR19.

The inverting input of U2 forms a summing point, being supplied via R15 with a second signal, the output of RF level detector CR19 and C5. This signal, detected from the RF signal envelope at the output of amplifier Q8, has a dc component and a superimposed ac signal; the dc voltage is proportional to RF carrier level but the ac voltage follows the negative portion of the RF signal modulation envelope waveform.

Since R14 and R15 are equal in value (5,110 ohms), the summing action at their junction connected to the inverting input of U2 and the high loop gain require the detected waveform applied to R14 to be equal in amplitude but opposite in polarity to the modulating audio waveform applied to R15, except for a very small error voltage which appears at the inverting input of U2.

This error voltage is amplified by U2, and then converted to an error current by modulator driver Q1. The amplified error current from Q1 collector controls the operating point of balanced modulator Z1 to provide the proper RF signal envelope to the input of RF detector, CR19 and C5, via Q8. The attenuation of the RF signal at balanced modulator Z1 is varied by the amplified error current from Q1 so that the instantaneous attenuation of RF signal at Z1 provides amplitude modulation of the RF signal, where the envelope of the RF signal follows the modulating signal.

The ac bandwidth and gain of this levelling feedback loop are determined by the time constants of R19 x C11 and R17 x C7 to avoid instability of the feedback loop.

A second path of modulating current is provided from the output of U1 through C12, R24 and R25, in addition to the modulating current from Q1 collector previously described. This premodulation current, adjustable by R24, reduces the error current required from Q1, increasing the ac feedback gain and bandwidth to ensure flat AM response up to 95% AM at modulating frequencies up to 20 kHz.

The modulated signal output from Q8, at the same frequency as the input selected (140 to 220 MHz), is filtered through low pass filter L8, L9, C39, C40 and C41 to suppress frequencies above 220 MHz before application to mixer A4Z2 X port via J19. Resistive attenuator pads, 6 dB at the input and 9 dB at the output of the low pass filter, isolate it from Q8 and J9 loading effects.

For monitoring % AM on the CRT display, the ac signal with its dc component from U1 is coupled out to J18 via R26. The ratio of peak ac to dc voltage is % AM of the RF signal.

5.3.4.4 Gain Controlled Amplifier, A4A11

In the difference mixer, A4Z2, the 140 to 220 MHz input from A4A5 is combined with the 940 to 920 MHz signal from A4A4 to produce a signal of 800 to 700 MHz, which goes through a bandpass filter A4FL1, and then to module A4A11, the Gain Controlled Amplifier (GCA). Refer to Figure 5-6.

The GCA serves as the output stage of the 10 MHz decade (A4) to drive the final mixer input (A5Z1-R port in the 100 MHz decade, A5). The gain of the GCA is variable over a range of more than 40 dB, by means of a dc control voltage input at J4. This dc input is supplied from the level detector in the final BBA (A5A10), thus the GCA becomes part of an ALC (automatic levelling control) loop. The ALC loop permits setting the synthesizer output level to 0 dBm in the generate mode and to +7 dBm in the measure mode as required by the measure mixer. The ALC loop also maintains the synthesizer output level constant despite variation in the GCA input level due to component tolerances over the rated temperature range.

The GCA input signal (700-800 MHz) is applied via J1 to broadband amplifiers Q1, Q2, and Q3. Refer to Figure 9-17. The gain of amplifiers Q1, Q2, and Q3 is controlled by increasing the positive bias current in each base to reduce the gain (forward AGC). The output of final amplifier Q3 is applied to low pass filter C14, L7, and C15 which attenuates unwanted signals above 810 MHz. Then the signal is passed thru a 3 dB isolating attenuator pad, R13, R14, and R15, to the GCA output receptacle J5, for application to the 100 MHz decade (A5) input.

5.3.5 100 MHz Decade, A5

The A5 assembly consists of a X10 multiplier (A5A1), diode switch assemblies (A5A2 and A5A9), six multipliers (A5A3 thru A5A8), output broadband amplifier assembly (A5A10), and measuring broadband amplifier (A5A11). Refer to Block Diagram Figure 5-7.

5.3.5.1 UHF Multipliers, A5A1 and A5A3 thru A5A8, Diode Switches, A5A2 and A5A9

There are six similar UHF multipliers A5A3 thru A5A8 developing output frequencies of 0.8 GHz, 0.9 GHz, 1.0 GHz, 1.1 GHz, 1.2 GHz and 1.3 GHz. The selected one of these frequencies, chosen by the position of the 100 MHz decade switch, is mixed with the 800 to 700 MHz signal from A4A11, the Gain Control Amplifier from the preceding assembly. Refer to schematics, Figures 9-18 thru 9-26.

Synthesis of the six UHF signals from 0.8 GHz to 1.3 GHz is achieved as follows. A 10 MHz signal from A1, the TCXO buffer, is fed into A5A1, an X10 multiplier module. Here the 10 MHz signal is shaped by two amplifier stages tuned for this frequency, then differentiated before multiplication in a circuit resonating at 100 MHz. Now the 100 MHz signal is amplified and passed through a narrow bandpass filter.

This 100 MHz signal is applied to A5A2, the Input Diode Switch assembly, consisting of six diode switches controlled by A10, the 100 MHz decade switch, which channels the 100 MHz signal from A5A1 to the input of the selected UHF multiplier module.

Then the desired UHF frequency from 0.8 GHz to 1.3 GHz passes through the appropriate output gate of A5A9, the Output Diode Switch assembly. In this frequency selection process, the 100 MHz decade switch activates one of the six UHF frequencies by grounding one of six control lines J2, J4, J6, J8, J10 or J12 on A5A9 to actuate the appropriate diode switch. A corresponding inverted logic level (+8.7 Vdc) appears at J14, J15, J16, J17, J18 or J19 to power the appropriate UHF multiplier and to actuate the appropriate channel in A5A2 through one of the logic inputs J2, J4, J6, J8, J10 or J12.

Thus, in terms of control logic, both the input diode switch and its output counterpart are ganged electronically so that selection of a single frequency, 0.8, 0.9, 1.0, 1.1, 1.2 or 1.3 GHz, is made by means of the 100 MHz decade frequency switch.

Each of the six UHF multiplier modules, from 0.8 GHz to 1.3 GHz, is essentially identical in design. The input 100 MHz signal is amplified and then multiplied in a circuit tuned to resonate at the appropriate UHF frequency. After further amplification in two stages providing input and output bandpass filters in each stage, the signal goes through a narrow band cavity filter also designed to pass the desired UHF frequency, 0.8 GHz to 1.3 GHz, and to attenuate the ±100 MHz sidebands.

5.3.5.2 Final Mixer, A5Z1

The UHF frequency selected by the 100 MHz decade switch enters the L port of the difference mixer A5Z1, where it is mixed with the 800 to 700 MHz signal from the Gain Control Amplifier, A4A11. The difference frequency, obtained from the X port of mixer A5Z1, is an RF output which can range in frequency from 50 kHz to 512 MHz in the GENERATE mode of the Model CSM-1, and ranges in frequency from 11.050 MHz to 523 MHz in the MEASURE mode of the instrument. This signal is applied to the A5A10 Output BBA module.

5.3.5.3 Output BBA, A5A10

The A5A10 module consists of an input low pass filter, a broadband amplifier, a signal sampling circuit which provides an ALC signal for the Gain Controlled Amplifier (A4A11), and two diode switches. Refer to Figures 5-7 and 9-27.

The input to A5A10 is a low level signal from the X port of the final mixer, A5Z1. In the GENERATE mode, the signal is between 50 kHz and 512 MHz, at a nominal level of -33 dBm. The actual level at the A5A10 input depends on its gain since its output level is held constant by the ALC loop including comparator U1, ALC DC Amplifier Q10, and Gain Controlled Amplifier A4A11. In the MEASURE mode, the input signal is between 11.05 MHz and 523 MHz at a level of -26 dBm. This level is fixed and is not affected by any of the controls. The signal first passes thru a 3 dB attenuator pad, then a low pass filter, and then thru a second 3 dB pad. The signal is then coupled by C6 to the input of the broadband amplifier, Q1.

The broadband amplifier is made up of four essentially identical class A gain stages. Each stage is biased by a constant current source for optimal gain. Interstage coupling is via a parallel RC network. This serves to peak up the overall gain at the higher frequencies, resulting in a flat response from below 50 kHz to above 523 MHz. Nominal amplifier gain is 45 dB, and gain flatness is ±2 dB, over this range. The output of the amplifier is coupled via R51 and C28 to output jack, J5. R51, combined with the 50 Ω load impedance normally connected to J5, acts as a power divider resulting in an overall amplifier gain of 33 dB between J2 and J5.

To provide output level control, diode CR4 samples the output signal and feeds the detected signal to U1. At the same time, a dc bias signal is applied via J7 to the same input of U1. Any difference between the detected signal and the bias signal results in a dc output from U1. This signal is buffered by Q10 and is applied via J9 as a level control signal to the gain control amplifier, A4A11. Since the output of A4A11 is the signal which drives A5Z1 which in turn drives A5A10, any change in output level results in a correcting signal which changes the drive to bring the signal level at J5 back to the desired level. The bias applied to J7 is controlled by the MODE switch A20. In the GENERATE mode, +4.5V is applied to J7 for an output level of 0 dBm, which may be set accurately by means of adjustment potentiometer R39. Q9 is a transistor switch which increases the ALC detector time constant for low frequencies (< 1 MHz) by connecting C29 to ground.

In the MEASURE mode, the A5A10 provides the L.O. signal for the Measure BBA mixer A22A1Z1. Since a +7 dBm signal level is needed, the MODE switch applies +9 volts to J7, resulting in maximum output from A4A11, and thus a +7 dBm output from the amplifier. At the same time, +9 volts is applied to J3, turning on CR3 which connects the output of Q7 to J4 which supplies the L.O. signal to A22A1Z1. It should be noted that a signal is still

present at J5. This signal is approximately +1 dBm in level and is exactly 11 MHz above the measurement frequency selected by the front panel controls.

5.3.5.4 Measure BBA, A22A1

A signal between 50 kHz and 512 MHz from the front panel MEASURE INPUT receptacle is applied to J2. The input signal is applied to the 3 stage broadband amplifier, Q2, Q4 and Q6, providing approximately 10 dB gain per stage. The amplified input signal is then applied via 3 dB attenuator pad, R23, R24 and R25 to doubly balanced mixer, Z1, X port. A signal between 11.05 MHz and 523 MHz (programed to be 11 MHz above the setting of the front panel frequency dials) from Final Broadband Amplifier A5A10 is applied to J3, which is connected directly to doubly balanced mixer, Z1, L port, supplying its local oscillator signal. Mixer Z1 is a difference mixer and provides an 11 MHz signal at the R port. The 11 MHz signal is amplified by Q7 with a tuned output circuit including capacitive divider, C29 and C30, providing low impedance output at J4. Q1, Q3 and Q5 regulate the base current in each amplifier stage Q2, Q4 and Q6 to maintain each collector current at approximately 21 mA despite temperature and h_{FE} variations.

The BBA has a nominal gain of 27 dB from J2 to the X port of Z1. Including a conversion loss of 6.5 dB in the mixer Z1 and IF gain of 12.5 dB in the Q7 stage, the overall gain of the A22A1 module from J2 to J4 is 33 dB. Thus for an RF input level range from 2 μV to 2 mV (-101 dBm to -41 dBm) the IF output level of A22A1 will range from -68 dBm to -8 dBm, applied to the input of the A6A1 module while provides further IF amplification.

5.3.6 Circuit Measure Assembly, A6

The A6 assembly consists of a IF, detector and audio amplifier (A6A1), vertical amplifier (A6A2), horizontal amplifier and sweep Generator (A6A3), and audio generator (A6A4). Refer to Block Diagram Figure 5-8.

5.3.6.1 IF, Detector and Audio Amplifier, A6A1

The A6A1 module processes the 11 MHz IF output from the measure BBA (A22A1) to provide the following audio frequency signals: (1) a demodulated audio output for monitoring and AM measurement on a CRT display, (2) a demodulated audio output for monitoring aurally, (3) a beat light driver output responsive to measured frequency error, and (4) an audio output for monitoring the frequency error beat aurally. The A6A1 includes an audio power amplifier for driving either a loudspeaker or headphones from signals (2) or (4) above.

The IF 11 MHz signal from A22A1 (MEAS BBA) is applied via J2 to a sensitivity range attenuator consisting of R1 and R2. Refer to schematic Figure 9-28. R2 is switchable by turning the diodes CR1 to CR4 on or off, as controlled by the MEAS sensitivity switch on the front panel. When the sensitivity switch is set to the 2 μV to 60 μ V range, then 0 Vdc is applied through R1 to diodes CR1 to CR4 via J6, diodes CR1 to CR4 are turned off, R2 is open circuited, and the attenuation is 0 dB. When the sensitivity switch is set to the 0.06 to 2 mV range, +9 Vdc is applied through R1 to diodes CR1 to CR4 via J6, the diodes CR1 to CR4 are turned on and the attenuation of the voltage divider is approximately 28 dB.

The 11 MHz signal from voltage divider R1 and R2 is applied to the two stage, gain controlled 11 MHz IF amplifier, Q1 through Q6. The first stage of the gain controlled IF amplifier, Q1, Q2 and Q3, is a feedback amplifier whose gain is controlled by the feedback voltage divider ratio between R10 and the total of R9 plus the combined resistance of diodes CR5 to CR8. This resistance depends on diode current as set by the dc voltage from the emitter follower Q16. Similarly, the second stage of the gain controlled IF amplifier, Q4, Q5 and Q6, is a feedback amplifier whose gain is controlled by feedback voltage divider ratio between R20 and R19 plus the resistance of diodes CR9 to CR12, which is set by the dc voltage from the emitter follower Q16.

The 11 MHz signal from Q6 is applied through buffer amplifier Q7 to crystal filter X1 which provides the overall measure selectivity (30 kHz bandwidth). The 11 MHz signal from crystal filter X1 is applied through the emitter follower Q8 and potentiometer R43 (IF gain adjust) to the RF input of active mixer U1. In U1, the 11 MHz signal mixes with the 10 MHz LO signal from A1 (10 MHz buffer) via J1, C18, the emitter follower Q9, level set R39 and C25, to produce a 1 MHz IF signal containing all of the modulation components of the 11 MHz signal. The 1 MHz IF signal from U1 is coupled through 1 MHz low pass filter C30, L1, C31, L2 and C32, where it is branched out to two 1 MHz amplifiers; Q17 (beat mixer driver) and Q10 (detector preamplifier).

Following Q10 are two common emitter 1 MHz IF amplifiers Q11 and Q12. Q12 drives common base amplifier Q13 whose collector output drives detector diodes CR13 and CR14 through C49. Detector amplifiers Q14 and Q15 connected in series with CR13 and CR14, are biased just at cutoff by R68, R71 and R72 to set a zero quiescent current threshold in detector diodes CR13 and CR14. When a 1 MHz IF signal is applied through C49, CR14 conducts on positive half cycles to produce detected output at Q15 collector, similarly CR13 conducts on negative half cycles to produce another detected output at Q14 collector. 1 MHz IF components at Q14 and Q15 collectors are fed back through C50 and C53 to Q11 emitter circuit. This negative feedback loop which includes the detector diodes CR13 and CR14, ensures good detection linearity.

The detected dc voltage level on the collector of Q15 is proportional to the 1 MHz IF signal level, and the detected ac signal level on the collector of Q15 is proportional to % AM of the 1 MHz IF signal so that the peak ac to dc voltage ratio on the collector of Q15 is % AM of the RF signal input to A22A1 (MEAS BBA).

This ac and dc detected signal is coupled out through R73, R74, low pass filter, C59 and L4, via J7 to the modulation measurement and display circuits. The detected signal at the collector of Q14 is processed through low pass filter, R70 and C51 to suppress 1 MHz IF carrier components then ac coupled through C52, then applied via J9, the DEMOD/BEAT switch (front panel), the VOLUME control (front panel), J10, and C93 to the audio power output amplifier U6.

There are two modes of operation; AGC mode and MANUAL mode, as selected by the AGC/MANUAL switch on the front panel. When this switch is set to the AGC mode, a reference dc voltage from the CARRIER SET

control is applied through J5, R82, R80 and R78 to the non-inverting input of IC differential amplifier U2. The detected signal from Q15 collector is applied through R73, R75 and R77 to the inverting input of U2. The ac component of the detected signal is filtered out through common mode rejection filter, C57, C58, R77, R78, R79, R86, C63, C64 and U2.

The resulting small error voltage between the inverting and non-inverting input is highly amplified, producing a levelling control voltage at the output of U2, which is coupled through R87, the AGC/MANUAL switch (via J3 and J4) and R89 to the base of emitter follower Q16. The emitter output of Q16 is applied to the two stage gain controlled amplifier through R11 and R21 to control the IF gain.

This automatic control loop maintains the dc component of the demodulated signal at J7 at a constant level independent of the level of the 11 MHz signal from A22A1 (MEAS BBA) within the specified level range.

When the AGC/MANUAL switch is set to MANUAL, the positive dc voltage from CARRIER SET control is applied through J4, R89, the emitter follower Q16, R11 and R21 to the diodes, CR5 to CR12, of two stage IF gain controlled amplifier.

The gain of the IF gain controlled amplifier increases or decreases with increasing or decreasing positive dc voltage from the CARRIER LEVEL control, thus the IF gain may be varied manually to set the output level at J7.

Thus in either AGC or MANUAL mode, (with the VERT MODE switch at VERT, 100% AM, or 30% AM) the CARRIER LEVEL control varies the level of the detected signal (ac and dc) at J7 to control the amplitude of the CRT display of modulation waveform to either a calibrated set up or a convenient viewing level as desired.

The 10 MHz signal from A1 (10 MHz BUFFER) is applied to buffer amplifiers Q18 and Q19 via J1. The output of Q19 drives a divide by ten IC (U5) which provides a 1 MHz signal. This 1 MHz signal is coupled through R107 and C82 to the LO port of active mixer U3. The 1 MHz IF signal from the 1 MHz IF mixer U1 is passed through low pass filter, C30, L1, C31, L2 and C32, then applied to the RF port of active mixer U3 via buffer amplifier Q17.

The 1 MHz IF signal mixes with the 1 MHz signal from U3. The two complementary outputs of the difference frequency from U3 drive two inputs of operational amplifier U4 via C83, C84, R112 and R113.

The beat note pulse output from U4 drives beat lite switch Q20, which in turn flashes the BEAT indicator on the front panel, and also is coupled through C88, R121, J8, BEAT and DEMOD switch and VOLUME control (front panel) to the audio power amplifier U6. The output of audio power amplifier U6 is coupled out to a front panel speaker via J11, to provide sound output, either beat note or demodulated audio signal, as selected by BEAT/DEMOD switch on the front panel.

5.3.6.2 Vertical Deflection Amplifier, A6A2

The A6A2 module consists of a direct coupled vertical deflection driver amplifier with push pull output to drive CRT deflection plates, and a signal processing circuit to derive synchronizing pulses to control the horizontal sweep circuit.

The selected signal from the front panel VERT MODE switch is applied via input J5 to the non-inverting high impedance input of preamplifier U1 which has a gain of approximately 9. Refer to schematic, Figure 9-29. U1 amplifies the input signal and applies it to the base of the deflection driver, Q1. The output signal from U1 is also applied to U2 which has a gain close to 1. U1 inverts the input signal (180°) and applies it to the base of the deflection driver, Q2. Q1 and Q2 amplify their equal and opposite input signals to provide push-pull drive to the CRT vertical deflection plates, through outputs J7 and J8. With nominal input 300 mV p-p at J5, the gains of Q1 and Q2 are adjusted by internal gain control R10 to provide full scale CRT deflection (100% on graticule). The signal levels at J7 and J8 are typically 57 V p-p for full scale CRT deflection, with a maximum capability around 200 V p-p to assure linear display over the full CRT screen.

To provide vertical trace positioning, a dc voltage from the wiper of the front panel VERT POS control, variable from +9 V to -9 V, is applied via J6 through R4 to the inverting input of U1. This controls the dc bias levels at the bases of Q1 and Q2, thus controlling their collector voltages which are applied to the CRT deflection plates to control the vertical trace position. When the CRT trace is centered vertically, the dc voltages at Q1 and Q2 collectors are substantially equal, typically +125 V each.

The output of U2 is also applied to sync preamplifier Q5 which amplifies the ac signal from U2 and applies it to a Schmitt trigger circuit Q3 and Q4. The Schmitt trigger circuit switches between cutoff and saturation, creating a 9 V p-p square wave at Q4 collector, having the same repetition rate as the input signal at J5. This square wave is differentiated by C14 and R32 to form sync pulses which are applied through J9 to the horizontal sweep circuit.

5.3.6.3 Horizontal Amplifier and Sweep Generator, A6A3

The A6A3 horizontal amplifier and sweep generator assembly consists of three sections, the sweep generator, horizontal deflection amplifiers, and VCO sweep drive amplifier.

The Sweep Generator consists of Current Source Q1, and Regenerative Retrace Switch, Q2 and Q3. Refer to schematic, Figure 9-30. When no signal is present in the vertical deflection amplifier to provide sync, recurrent horizontal sweep is generated as follows. Constant current from Q1 collector charges a timing capacitor, C1 or C2, to produce a linearly rising ramp voltage. Q2 and Q3 form a regenerative switch, equivalent to an SCR, which turns on each time the ramp voltage reaches a predetermined level (approximately +2 volts; one V_{be} drop above the dc bias provided by R4 and R5). The timing capacitor is rapidly discharged to about 0.7 volts, Q2 and Q3 turn off, and the charge cycle repeats. The recurrent constant charge and rapid discharge produces a ramp waveform with an amplitude of 1.3 V peak-to-peak and a frequency determined by (a) the charging current, which is controlled by the front panel SWEEP RATE control resistance in Q1 emitter circuit over a range which is preset by Q1 bias control R15, and (b) the timing capacitance. Two ranges of frequency are selectable by the front panel SWEEP MODE switch which selects the timing capacitor by grounding either C2 thru J6 for the LO range,

10 Hz to 224 Hz, or C1 thru J5 for the HI range, 224 Hz to 5 kHz. Diode CR1 provides temperature compensation for Q1 bias. When ac signals are present in the vertical deflection amplifier, negative-going sync pulses are applied thru J2 to the GATE (Q2 base and Q3 collector) of the retrace switch. These pulses cause the retrace switch to fire earlier than in the free-running condition described above. This results in a sweep frequency, slightly higher than the free-running frequency, synchronized to the vertical signal frequency (or sub-multiple) to display a steady synchronized pattern on the CRT screen.

The Horizontal Deflection Amplifier section consists of FET source follower buffer, Q4, and horizontal CRT deflection drivers Q5 and Q6. The input signal to the horizontal amplifier is supplied from the front panel SWEEP MODE switch via J8 to the high impedance input or buffer, Q4. The SWEEP MODE switch selects either the ramp waveform from the Sweep Generator section or an external signal from the front panel HORIZONTAL INPUT receptacle. The signal from Q4 is applied directly to the base of deflection amplifier, Q5. The amplified and inverted signal at Q5 collector is applied to deflection Output J13. The signal at Q5 emitter is applied via R11 and the front panel HORIZONTAL GAIN control to the emitter of deflection amplifier, Q6. The signal on Q6 collector is in-phase with the applied emitter signal and thereby 180° out of phase with the signal at Q5 collector. The signal at Q6 collector is applied to deflection output J14. The front panel HORIZ POS control varies the base voltage of Q6, controlling the collector voltages of Q5 and Q6 in a push-pull manner to horizontally position the CRT trace.

The VCO Sweep Driver is an operational amplifier IC, U1, driven by buffer Q4, providing gain of 2.5 x, non-inverting, to drive the VCO sweep frequency circuitry. On internal SWEEP MODE (LO or HI range), the ramp waveform output at J12 is 3 V peak to peak minimum, applied to the front panel SWEEP WIDTH control.

5.3.6.4 Audio Oscillator, A6A4

The Audio Oscillator is designed to provide either a 1 kHz or a 400 Hz signal as a standard modulating tone for the AM modulator, A4A5. Additionally, an auxiliary tone output is available at the front panel TONE OUTPUT receptacle. Tone selection is accomplished by an integral diode switch located on the oscillator board. A leveling loop holds the output level constant.

Operational amplifier U1 is connected in a Wein bridge oscillator configuration, with a negative feedback path through R8. Refer to schematic Figure 9-31. A shunt branch consisting of R3, RT1 and Q1, sets the voltage gain at about 10 dB. A positive feedback path to the non-inverting input of U1 through the RC filter produces zero phase shift and about 10 dB attenuation at the frequency of oscillation.

One of two sets of filter components is selected by diode switching controlled by the front panel TONE FREQUENCY switch. For 1 kHz operation, diode switch CR1 is turned on, placing C3, R19, R10, R12 and C6 in the bridge. R12 is a frequency adjust to set the frequency at 1 kHz. For 400 Hz operation, diode switch CR2 is turned on, placing C4, R9, R11, R13 and C7 in the bridge. R13 is a frequency adjust to set the frequency at 400 Hz.

The leveling loop consists of CR3, C5, Q1, RT1, and R3. CR3 detects the output level and uses the detected voltage to charge C5. This voltage at C5 controls the gate voltage of FET Q1. Q1 acts as a gate controlled variable resistor connected to the inverting input of op-amp U1. Therefore, any increase in output of U1 results in an increase in the resistance of Q1, thereby decreasing the gain of U1 to bring the output level back to the desired level. The positive feedback level and therefore the output level, is set by R14 for 1 kHz operation, and by R16 for 400 Hz operation. The combination of R1 and thermistor RT1 compensate for changes in the resistance of Q1 with temperature. Resistor R2 shunts Q1 to lessen the effect of variations in FET parameters.

5.3.7 AM Measurement Circuit

Refer to Schematic Diagram, Figure 9-42, of the A19 switch/control assembly, which includes the VERT MODE switch and CARR LEVEL control.

The input to the AM measurement circuit is applied to J4 pin 8 (TP1). This input signal is an audio signal including a dc component, either from the AM detector in the measure mode or from the AM modulator in the generate mode, as selected by the FUNCTION switch A21S1, refer to Figure 9-44. The output from the AM Measurement circuit at terminal E3, refer to Figure 9-42, is applied to the input of the CRT vertical deflection amplifier A6A2J5.

In the set-up procedure for measuring AM, the operator sets the VERT MODE switch successively to VERT SET, CARR SET and 100% AM or 30% AM. (Refer to the CSM-1 Operator's Manual.)

In the VERT SET position of the VERT MODE switch, the input to the vertical deflection amplifier is grounded by S2C, permitting the operator to set the CRT trace to the ZERO SET reference line near the bottom of the graticule.

When the VERT MODE switch is set to CARR SET (carrier set), S2 forms the circuit shown in Figure 5-2a, where C2 removes the audio component and applies only a portion of the dc component of the input signal to the vertical amplifier. The operator adjusts the CARRIER LEVEL control which varies the input signal level to place the CRT trace on the CARR SET reference line near the top of the graticule. This standardizes the level of the input signal.

When the VERT MODE switch is set to 100% AM, the switch S2 forms the circuit shown in Figure 5-2b where the dc voltage applied to the scope has been reduced by R10 and R11 to exactly 50% of the level in Figure 5-2a. This places the trace at the center of the graticule for unmodulated signals, and sets up the calibrated condition to measure 100% AM full scale on the graticule when modulation is present, since C2 is now removed from the circuit, permitting both the audio and dc component to reach the CRT display.

When the VERT MODE switch is set to 30% AM, C1 is added to the circuit as shown in Figure 5-2c. This has no effect on the dc level to the CRT display, therefore the center graticule trace positioning is not disturbed. However the audio frequency gain has been increased by a factor of 3.3 times by C1 effectively short-circuiting R8 and R10 for audio frequencies, therefore the CRT graticule is now calibrated for 30% AM full scale.

5.3.8 Main Power Supply Including A7 Regulator

The main power supply is located on the removeable rear panel. It consists of the power switch, fuse holder, power transformer, rectifier and filter, the +9 volt regulator (A7), and the +5 V regulator (U1). Its purpose is to supply +9 V regulated, +5 volts regulated, and 6.3 V ac to the CRT filaments. Refer to Schematic Diagram, Figure 9-32.

The AC line is connected to J1. The ac power passes through a line filter and fuse and then through power switch S1. A voltage switch which is part of the line filter-fuse holder unit (J1) is set for either 120 or 240 volt, 60 Hz operation. Power transformer T1 converts the line voltage to 6.3 V rms and 14.4 V rms. The 6.3 volt winding is insulated for high voltage, since the CRT cathode operates near -1 kV.

The 14.4 V rms winding is rectified by full wave bridge CR1, filtered by C1 and C2, and supplied to the U1 regulator (+5 V) and the A7 regulator (+9 V) at approximately 15.4 V dc. The +5 volt regulator (U1) is a 3 terminal hybrid mounted in a TO-3 can. It is located on the outside of the back panel, between T1 and the heatsink for Q1. U1 is designed to give +5 V dc ±5% under all normal operating conditions. The output of the regulator is connected to the main power supply output connector, J2, Pin 6.

The +9 V regulator is made up of the A7 regulator board and pass transistor Q1. A7 is located on the inside of the back panel between C1 and C2. Q1 is located on the outside of the panel on a large heatsink. IC voltage regulator (A7U1) contains a reference amplifier, an error amplifier, a series pass transistor, and a current limit circuit. A7U1 controls current driver A7Q1 which is Darlington connected to the series pass transistor Q1 (mounted on the heatsink) to give the required current handling capabilities. The regulated output voltage is set by voltage set control A7R10, while the maximum current is limited by current set control A7R3. The output of the regulator is A7J3, connected to the main power supply output connector, J2, Pin 3.

5.3.9 High Voltage Power Supply, A8

The High Voltage Power Supply A8 is a dc to dc inverter. Refer to Figure 9-33. The +9.0 V dc is applied via J1 to T1-2 to provide collector voltage for switching transistors, Q1 and Q2, via T1-1 and T1-3. The +9.0 V dc is also applied across bias voltage divider resistors, R1 and R2, to forward bias Q1 and Q2 bases via T1-6 and T1-4.

Due to unbalances in T1 windings and slight differences in Q1 and Q2 base-emitter resistance and beta, either Q1 and Q2 will begin conducting first and saturate. Assume that Q1 conducts first. Q1 collector current flowing between T1-1 and T1-2 creates a counter EMF and induces an opposite polarity voltage across T1-3 and T1-2 to prevent Q2 from conducting. The induced voltage also appears across T1-6 and T1-5 and T1-4 and T1-5. The induced voltage across T1-6 and T1-5 is opposite in polarity to that across T1-1 and T1-2 and thereby supports Q1 conduction. The induced voltage across T1-4 and T1-5 is opposite in polarity to that across T1-3 and T1-2 and thereby prevents Q2 from conducting. When T1 core reaches saturation, the induced voltages across T1 windings collapse and thereby cause Q1 to cutoff. Q2 begins conducting and saturates. Q2 collector current flowing between T1-3 and T1-2 creates a counter EMF and induces an opposite polarity voltage across T1-1 and T1-2 to keep Q1 cutoff. The induced voltage also appears across T1-4 and T1-5 and T1-6 and T1-5. The induced voltage across T1-4 and T1-5 is opposite in polarity to that across T1-3 and T1-2 and thereby supports Q2 conduction. The induced voltage across T1-6 and T1-5 is opposite in polarity to that across T1-1 and T1-2 and thereby prevents Q1 from conducting. When T1 core reaches saturation, the induced voltages across T1 windings collapse and thereby cause Q2 to cutoff and the cycle repeats.

The inverter frequency is approximately 20 kHz as determined by the core properties and the number of turns on T1. Inductor L1, and capacitors C2 and C3 prevent the inverter signal from feeding back on the +9.0 V dc supply line. Transformer, T1, is a step-up transformer and the inverter voltage developed across T1-3 and T1-1 is stepped up and appears across secondary windings T1-7 and T1-9, and T1-10 and T1-11. Diodes CR1 thru CR4 are connected across T1-10 and T1-11 and function as a full wave bridge rectifier. The rectified dc voltage from CR1 thru CR4 is applied via filter network, C4, R3, and C5, to -9.0 V dc output J2. Capacitors, C6 and C7, and diodes, CR5 and CR6, are connected between T1-9 and ground and function as a voltage doubler. The stepped-up and rectified dc voltage is applied via filter network, R4 and C8 to -1000 V dc output J3. Capacitors, C9 and C10, and diodes, CR7 and CR8 are connected between T1-8 and ground and also function as a voltage doubler. The stepped-up and rectified dc voltage is applied to +250 V dc outputs J4 and J5.

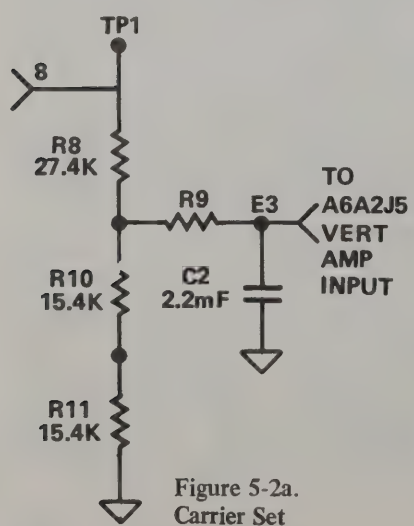

Figure 5-2a.
Carrier Set

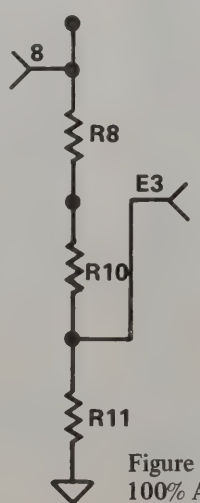

Figure 5-2b.
100% AM

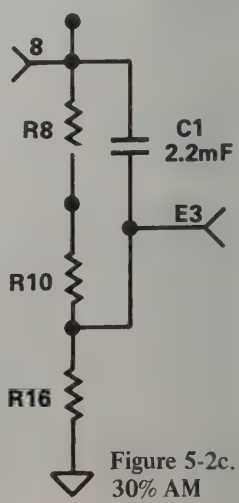

Figure 5-2c.
30% AM

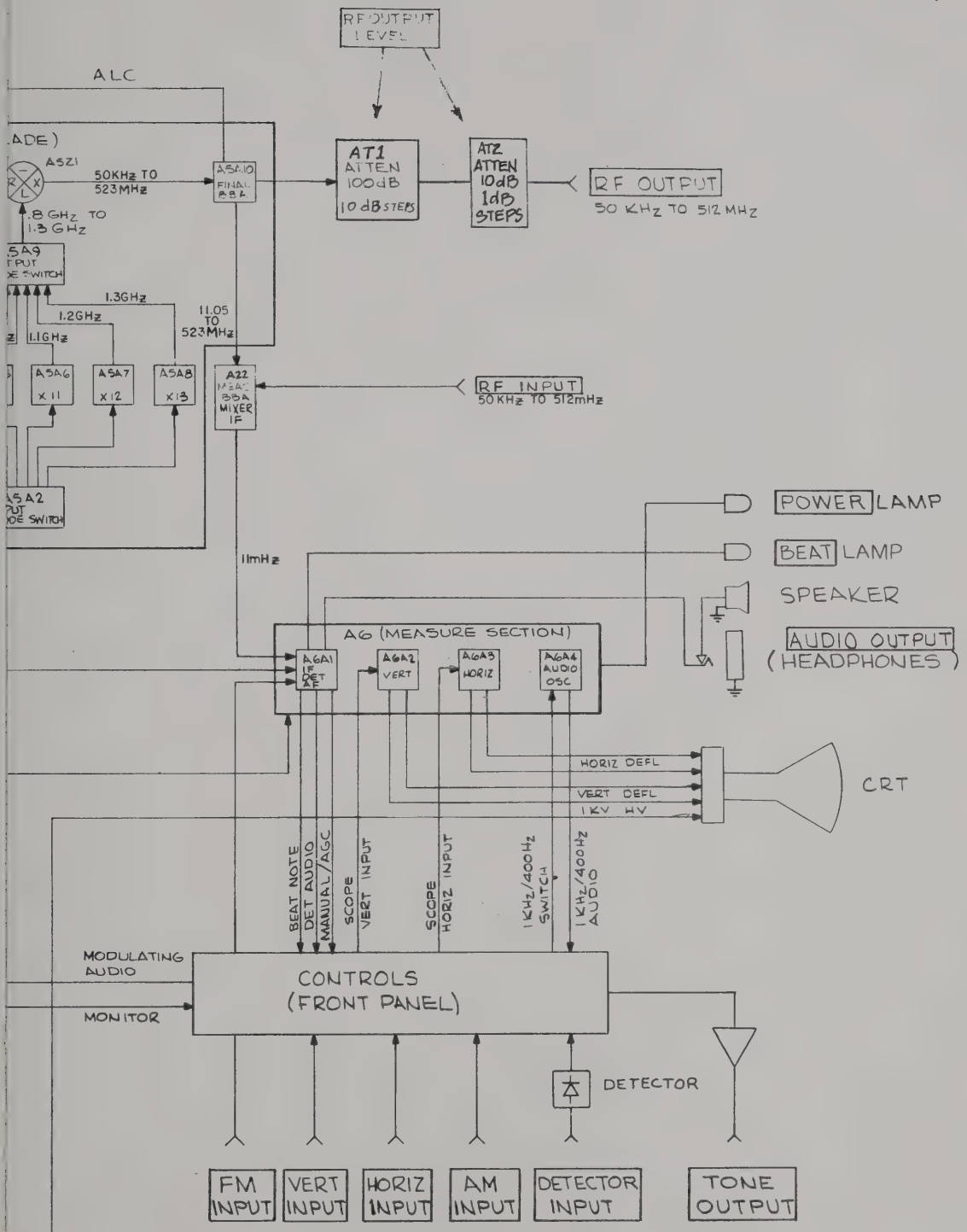

Figure 5-3. Simplified Overall Block Diagram of the Model CSM-1 Dwg No. 4-501501-001(A)

5.3.8 Main Power Supply Including A7 Regulator

The main power supply is located on the removeable rear panel. It consists of the power switch, fuse holder, power transformer, rectifier and filter, the +9 volt regulator (A7), and the +5 V regulator (U1). Its purpose is to supply +9 V regulated, +5 volts regulated, and 6.3 V ac to the CRT filaments. Refer to Schematic Diagram, Figure 9-32.

The AC line is connected to J1. The ac power passes through a line filter and fuse and then through power switch S1. A voltage switch which is part of the line filter-fuse holder unit (J1) is set for either 120 or 240 volt, 60 Hz operation. Power transformer T1 converts the line voltage to 6.3 V rms and 14.4 V rms. The 6.3 volt winding is insulated for high voltage, since the CRT cathode operates near -1 kV.

The 14.4 V rms winding is rectified by full wave bridge CR1, filtered by C1 and C2, and supplied to the U1 regulator (+5 V) and the A7 regulator (+9 V) at approximately 15.4 V dc. The +5 volt regulator (U1) is a 3 terminal hybrid mounted in a TO-3 can. It is located on the outside of the back panel, between T1 and the heatsink for Q1. U1 is designed to give +5 V dc ±5% under all normal operating conditions. The output of the regulator is connected to the main power supply output connector, J2, Pin 6.

The +9 V regulator is made up of the A7 regulator board and pass transistor Q1. A7 is located on the inside of the back panel between C1 and C2. Q1 is located on the outside of the panel on a large heatsink. IC voltage regulator (A7U1) contains a reference amplifier, an error amplifier, a series pass transistor, and a current limit circuit. A7U1 controls current driver A7Q1 which is Darlington connected to the series pass transistor Q1 (mounted on the heatsink) to give the required current handling capabilities. The regulated output voltage is set by voltage set control A7R10, while the maximum current is limited by current set control A7R3. The output of the regulator is A7J3, connected to the main power supply output connector, J2, Pin 3.

5.3.9 High Voltage Power Supply, A8

The High Voltage Power Supply A8 is a dc to dc inverter. Refer to Figure 9-33. The +9.0 V dc is applied via J1 to T1-2 to provide collector voltage for switching transistors, Q1 and Q2, via T1-1 and T1-3. The +9.0 V dc is also applied across bias voltage divider resistors, R1 and R2, to forward bias Q1 and Q2 bases via T1-6 and T1-4.

Due to unbalances in T1 windings and slight differences in Q1 and Q2 base-emitter resistance and beta, either Q1 and Q2 will begin conducting first and saturate. Assume that Q1 conducts first. Q1 collector current flowing between T1-1 and T1-2 creates a counter EMF and induces an opposite polarity voltage across T1-3 and T1-2 to prevent Q2 from conducting. The induced voltage also appears across T1-6 and T1-5 and T1-4 and T1-5. The induced voltage across T1-6 and T1-5 is opposite in polarity to that across T1-1 and T1-2 and thereby supports Q1 conduction. The induced voltage across T1-4 and T1-5 is opposite in polarity to that across T1-3 and T1-2 and thereby prevents Q2 from conducting. When T1 core reaches saturation, the induced voltages across T1 windings collapse and thereby cause Q1 to cutoff. Q2 begins conducting and saturates. Q2 collector current flowing between T1-3 and T1-2 creates a counter EMF and induces an opposite polarity voltage across T1-1 and T1-2 to keep Q1 cutoff. The induced voltage also appears across T1-4 and T1-5 and T1-6 and T1-5. The induced voltage across T1-4 and T1-5 is opposite in polarity to that across T1-3 and T1-2 and thereby supports Q2 conduction. The induced voltage across T1-6 and T1-5 is opposite in polarity to that across T1-1 and T1-2 and thereby prevents Q1 from conducting. When T1 core reaches saturation, the induced voltages across T1 windings collapse and thereby cause Q2 to cutoff and the cycle repeats.

The inverter frequency is approximately 20 kHz as determined by the core properties and the number of turns on T1. Inductor L1, and capacitors C2 and C3 prevent the inverter signal from feeding back on the +9.0 V dc supply line. Transformer, T1, is a step-up transformer and the inverter voltage developed across T1-3 and T1-1 is stepped up and appears across secondary windings T1-7 and T1-9, and T1-10 and T1-11. Diodes CR1 thru CR4 are connected across T1-10 and T1-11 and function as a full wave bridge rectifier. The rectified dc voltage from CR1 thru CR4 is applied via filter network, C4, R3, and C5, to -9.0 V dc output J2. Capacitors, C6 and C7, and diodes, CR5 and CR6, are connected between T1-9 and ground and function as a voltage doubler. The stepped-up and rectified dc voltage is applied via filter network, R4 and C8 to -1000 V dc output J3. Capacitors, C9 and C10, and diodes, CR7 and CR8 are connected between T1-8 and ground and also function as a voltage doubler. The stepped-up and rectified dc voltage is applied to +250 V dc outputs J4 and J5.

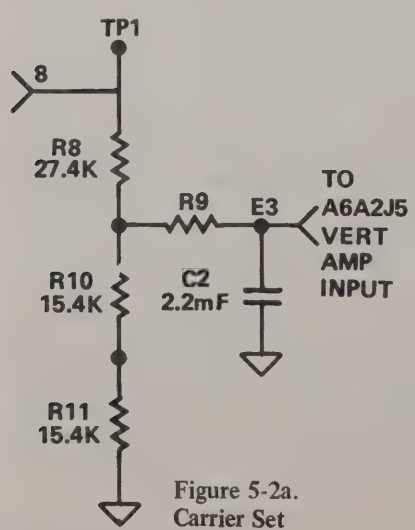

Figure 5-2a.
Carrier Set

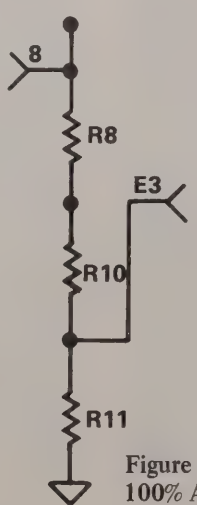

Figure 5-2b.
100% AM

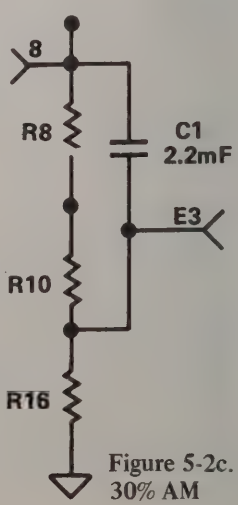

Figure 5-2c.
30% AM

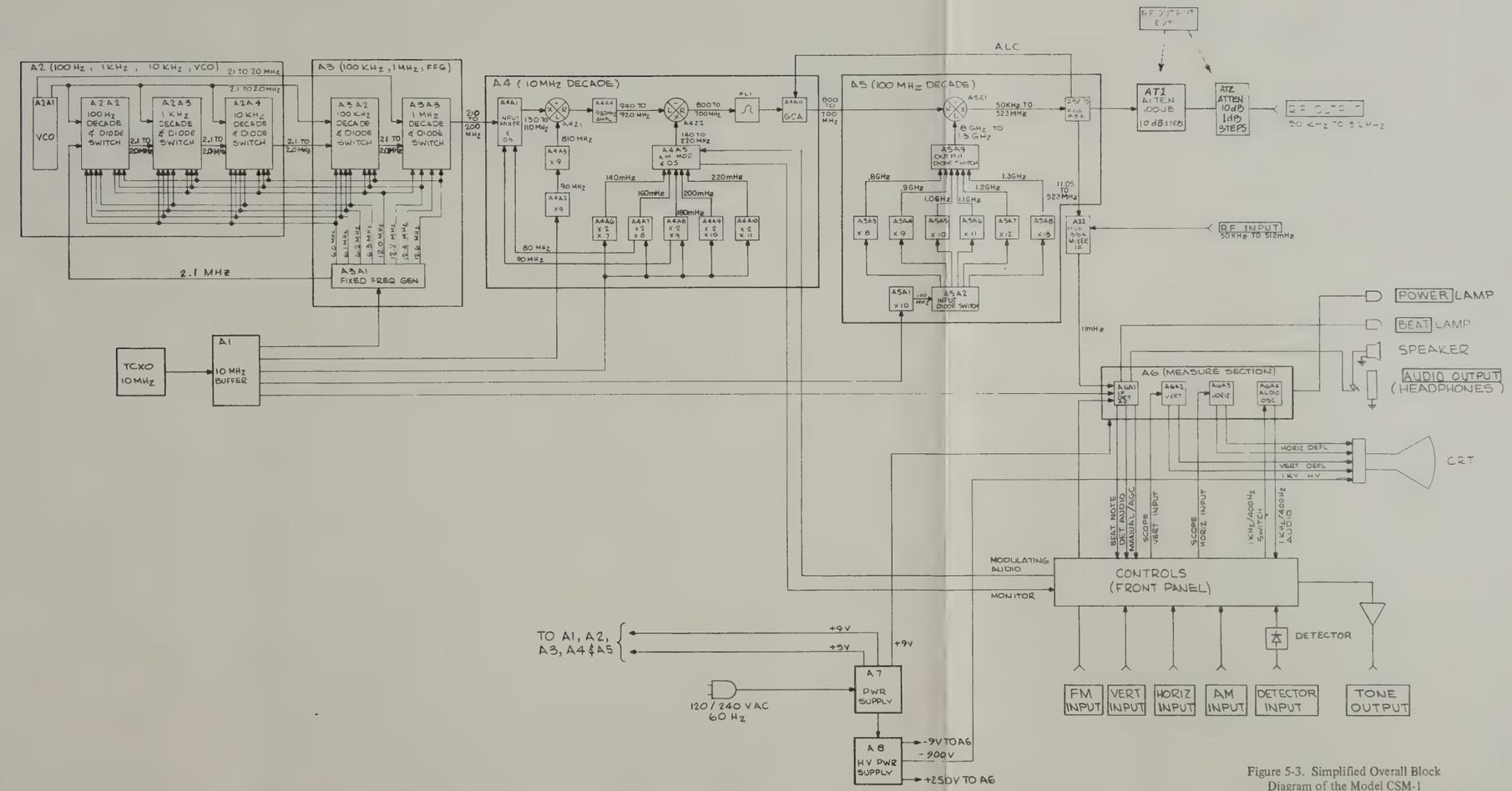

Figure 5-3. Simplified Overall Block Diagram of the Model CSM-1 Dwg No. 4-501501-001(A)

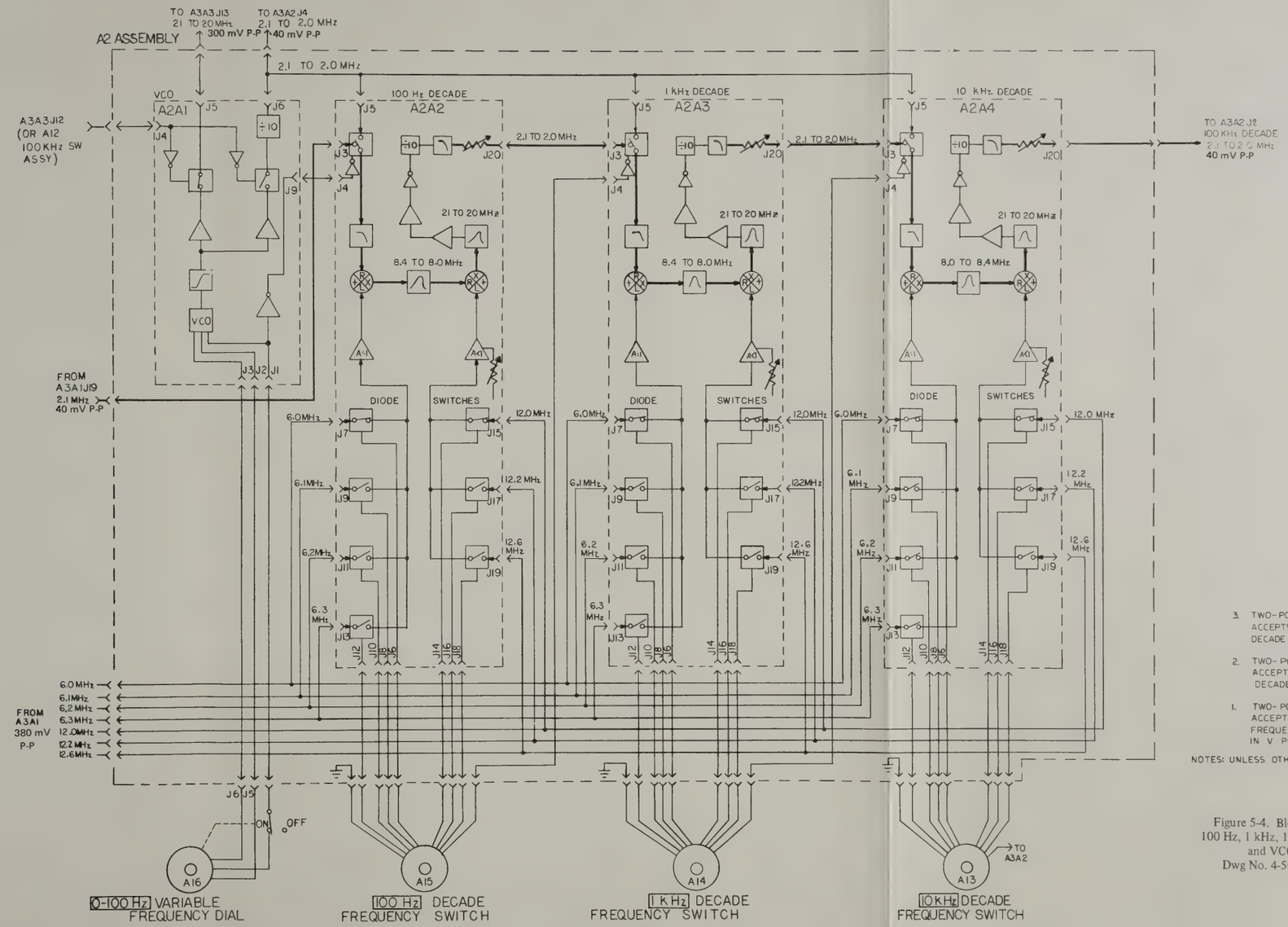

3. TWO-POLE DIODE SWITCH IN A2A4 ACCEPTS VCO INPUT WHEN 1 KHz DECADE SWITCH IS IN V POSITION.

2. TWO-POLE DIODE SWITCH IN A2A3 ACCEPTS VCO INPUT WHEN 100 Hz DECADE SWITCH IS IN V POSITION.

1. TWO-POLE DIODE SWITCH IN A2A2 ACCEPTS VCO INPUT WHEN VARIABLE FREQUENCY (0 TO 100 Hz) SWITCH IS IN V POSITION.

NOTES: UNLESS OTHERWISE SPECIFIED

Figure 5-4. Block Diagram
100 Hz, 1 kHz, 10 kHz Decades
and VCO, A2
Dwg No. 4-501502-001(A)

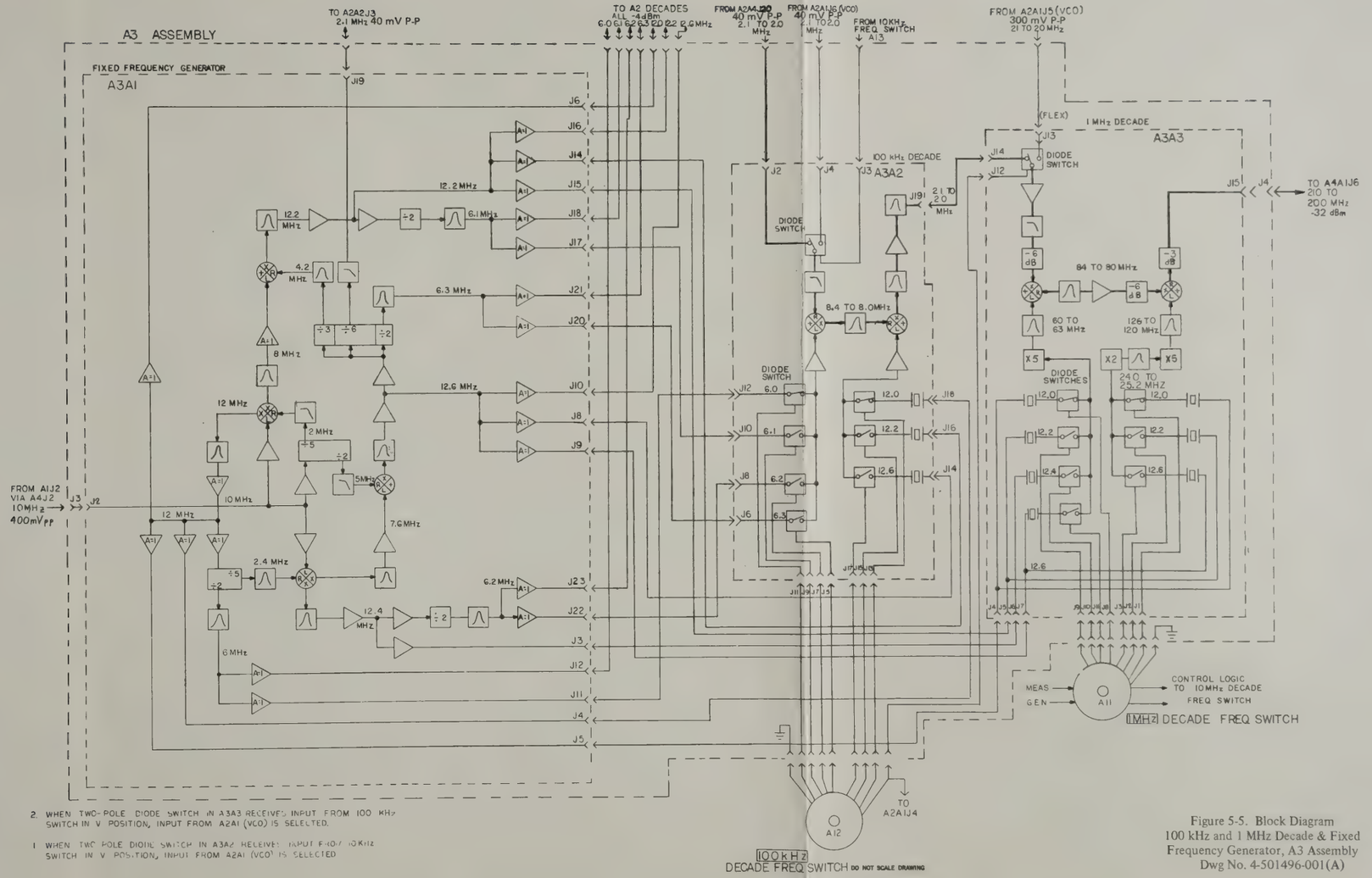

Figure 5-5. Block Diagram
100 kHz and 1 MHz Decade & Fixed
Frequency Generator, A3 Assembly
Dwg No. 4-501496-001(A)

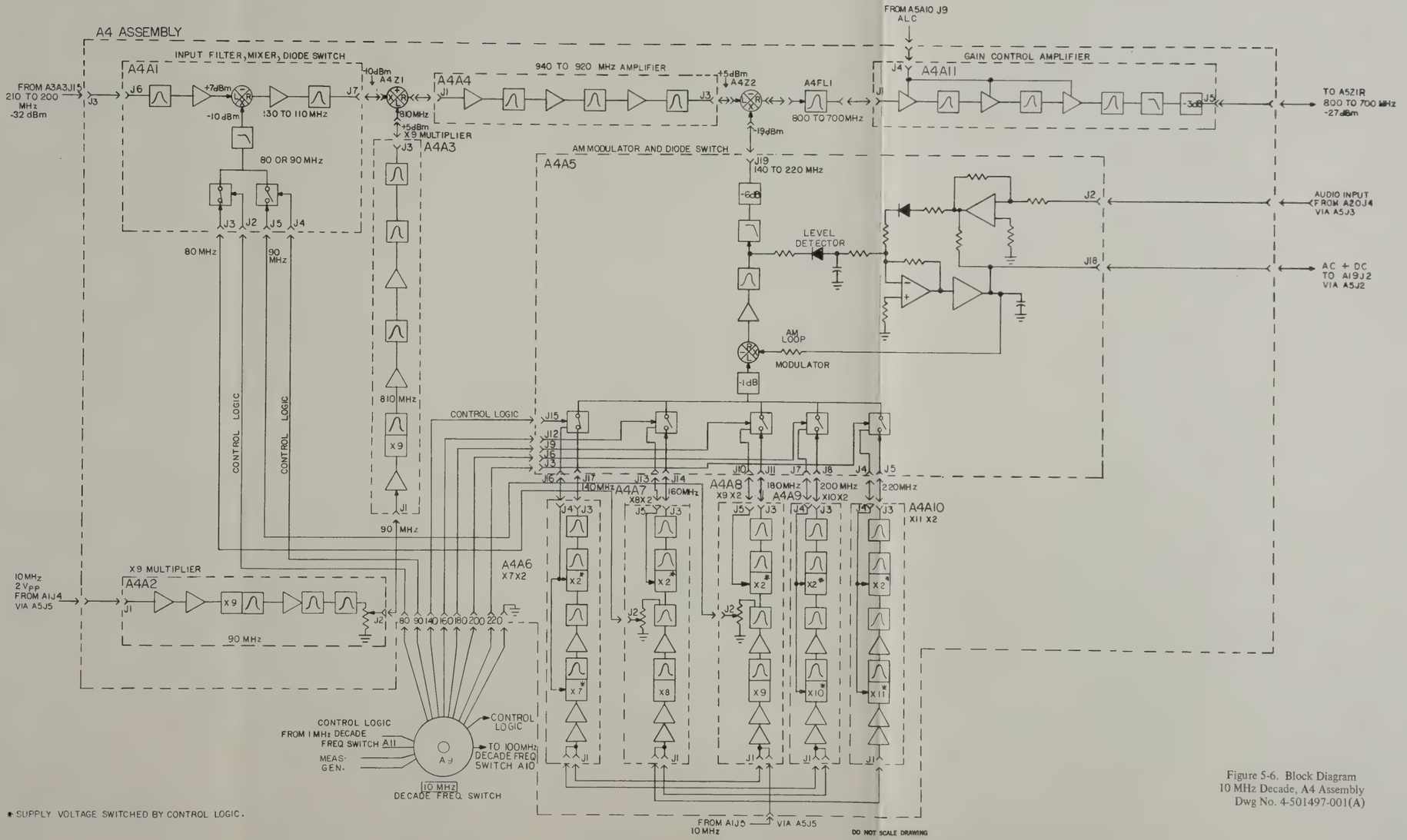

1. * SUPPLY VOLTAGE SWITCHED BY CONTROL LOGIC.

Figure 5-6. Block Diagram
10 MHz Decade, A4 Assembly
Dwg No. 4-501497-001(A)

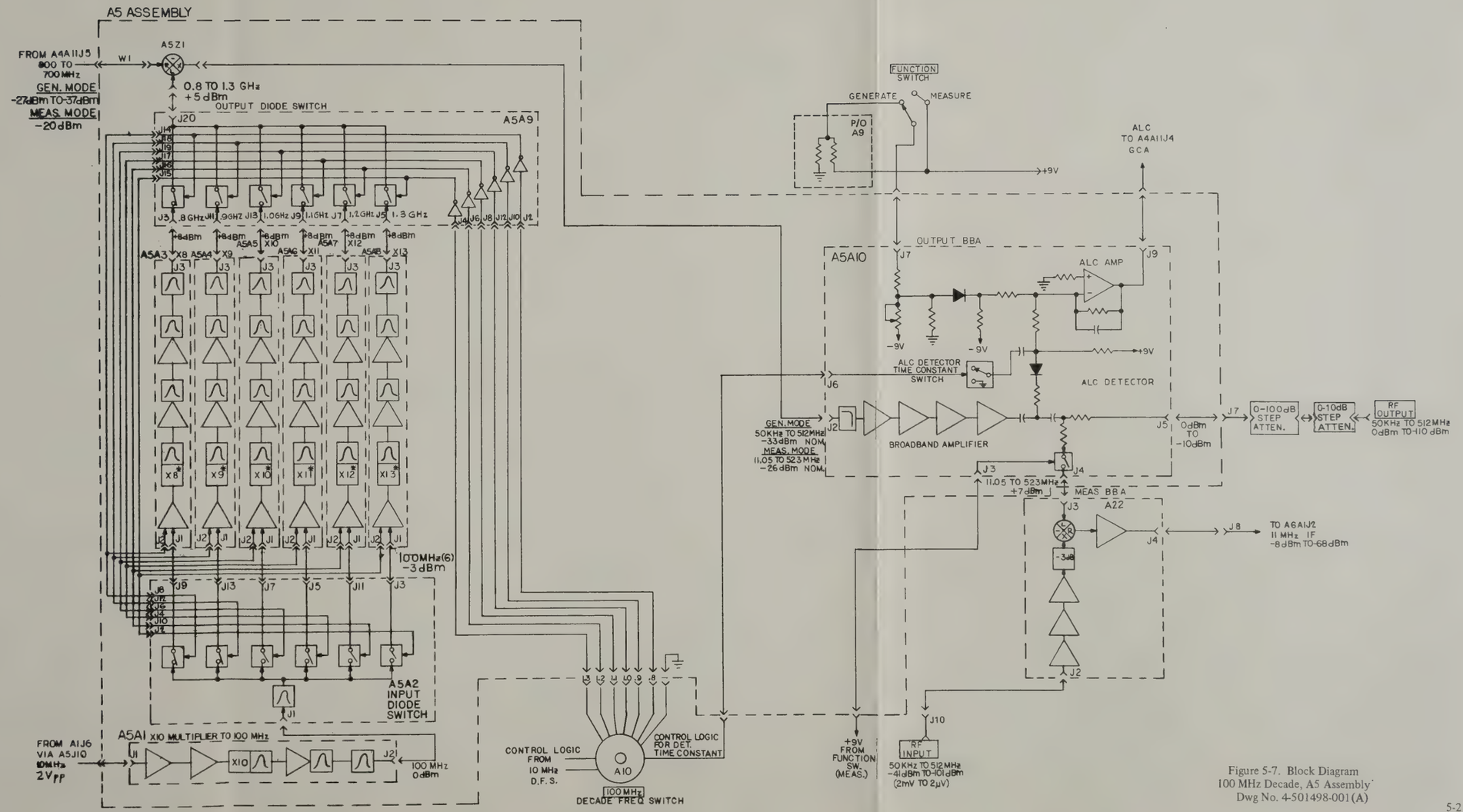

Figure 5-7. Block Diagram
100 MHz Decade, A5 Assembly
Dwg No. 4-501498-001(A)

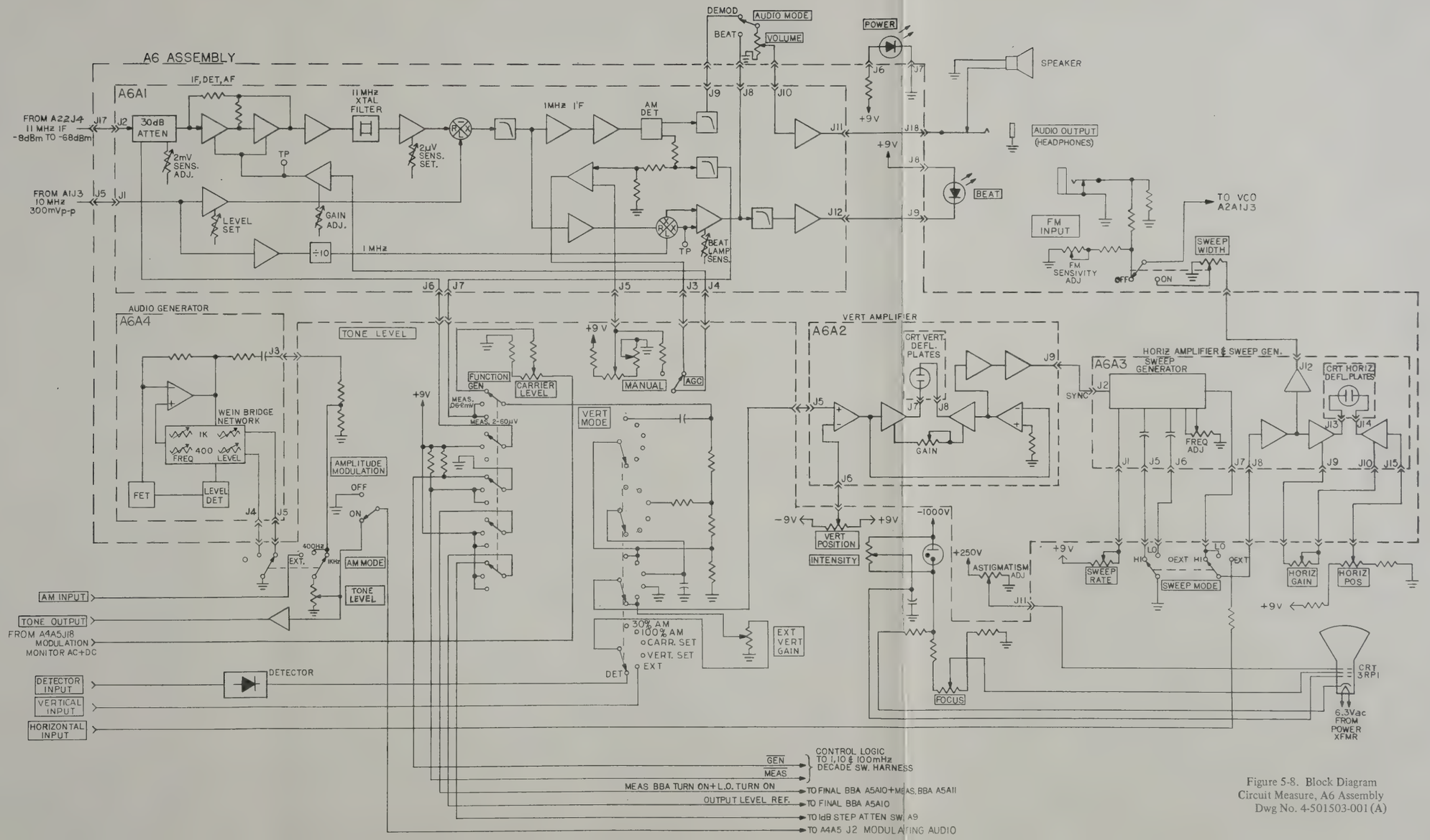

Figure 5-8. Block Diagram
Circuit Measure, A6 Assembly
Dwg No. 4-501503-001 (A)

Section VI

MINIMUM PERFORMANCE TEST PROCEDURES

6.1 INTRODUCTION

The following Minimum Performance Test Procedures show the recommended test methods to ascertain that a particular parameter of the CSM-1, such as power level or frequency accuracy, is within its specification. Any of these procedures may be used after a repair or extensive adjustment or when the performance of the CSM-1 is suspect.

For completeness, practically all measurable performance parameters have been included. Some of these are inherent in the design and are unlikely to change during the lifetime of the instrument, while others may not be of significance in particular applications, therefore, it is expected that tests to be performed will be chosen on a selective basis according to individual problems or circumstances.

6.2 TEST EQUIPMENT REQUIRED

Test equipment required for the Minimum Performance Test Procedures, Fault Isolation Procedures, and Alignment and Adjustment Procedures is listed in Table 6-1. Minimum specifications are provided to aid in selection of equivalent types of essential test instruments.

The extreme right column of Table 6-1 offers a key to the test equipment required for various procedures. Test instruments used for Minimum Performance Test Procedures are keyed "M"; those required for Fault Isolation Procedures, and Alignment and Adjustment Procedures are designated by "A".

In general, it is desirable to use test equipment with an accuracy 10 times greater than the accuracy necessary to match the instrument parameter being tested.

6.3 WARM-UP TIME TEST

Specifications:

The CSM-1 shall meet all accuracy and stability specifications after a 10 sec warm-up.

Description:

The frequency and the power level are measured 10 sec after CSM-1 turn on.

Equipment:

1 ea Frequency Counter, Dana Model 8130, calibrated for frequency accuracy $\pm 1 \times 10^{-7}$

1 ea RF Millivoltmeter, Boonton Model 92BD, with RF Probe 91-12F, with T Adapter Model 91-41A and 50 ohm termination 91-15A.

1 ea Calibrated Resistive Tee, Micro Labs Model DA-3FB or equivalent (6 dB nominal insertion loss).

Procedure:

Set up test equipment as shown in Figure 6-1.

Do not turn on CSM-1 under test. Turn on Counter and RF Millivolt Meter at least 30 minutes prior to the test. On Millivolt Meter, push 0 dBm and set Display Mode switch to dBm. On Counter, connect RF cable to Input C, push Frequency C button under Function, and 1 sec button under Measurement Time. Set the CSM-1 Frequency dials to 123.4567 MHz (0 – 100 Hz Variable dial to OUT), the RF OUTPUT level to 0 dBm, the FUNCTION switch to GENERATE and the AMPLITUDE MODULATION switch to OFF. Turn the CSM-1 on, wait 10 sec and take a frequency reading and a power level reading. Turn the CSM-1 off.

Limits:	Frequency reading:	Min: 123.456577 MHz Max: 123.456823 MHz
	Level reading:	Min: -7 dBm Max: -5 dBm

6.4 120 V/240 VAC LINE VOLTAGE OPERATION

Specifications:

The CSM-1 will operate within specification at both 120 and 240 VAC.

Description:

The CSM-1 power cord is connected to the 240 VAC line and the output frequency and level are measured.

Procedure:

Leave the equipment set up as in Test 1.0. Slide transparent fuse cover on rear of CSM-1 downward to expose fuse. Pull FUSE PULL lever out and downward to release fuse, and remove fuse. Remove printed circuit card by means of hole in card end. Turn the printed circuit card over to expose the number 240 and reinsert.

Set FUSE PULL lever completely downward and replace fuse. Slide transparent fuse cover upward. Connect the CSM-1 Power Cord to the 240 VAC line. Turn on the CSM-1, and record the frequency reading and the power level. Return the fuse to the 120 VAC position.

Limits:	Frequency reading:	Min: 123.456577 MHz Max: 123.456823 MHz
	Level reading:	Min: -7 dBm Max: -5 dBm

Table 6-1. Test Equipment Requirements

Instrument	Minimum Specifications	Recommended		Use*
		Manufacturer	Model	
Frequency counter (automatic)	Frequency range: 0.05 Hz to 500 MHz Voltage range: 1 mV rms to 1 V rms Measurement time: 1 ms to 10 sec, decade steps Accuracy: $\frac{\pm 1 \times 10^{-7}}{\text{meas. time}}$ Impedance: 50Ω	Dana Laboratories	8130	A,M
RF millivoltmeter	Frequency range: 50 kHz to 1.2 GHz Voltage: 200 uV to 3V Accuracy: ±(1% rdg + 1% fs)	Boonton	92BD	A,M
RF probe	Input: full wave diode rectifier Capacitance: <3 pF VSWR: <1.15	Boonton	91-12F	A,M
T adapter	Impedance: 50 ohms VSWR: <1.2	Boonton	91-14A	A,M
50 ohm termination	required with 91-14A	Boonton	91-15A	A,M
Resistive tee	Frequency range: 50 kHz to 512 MHz Insertion loss: 6 dB Load isolation: 12 dB Impedance: 50Ω	MicroLabs	DA-3FB	M
FM discriminator	Frequency range: 20 Hz to 100 kHz Voltage input: 10 mV rms to 10 V rms Accuracy: 1% of rdg from >10% of fs Input impedance: 1 MΩ, 30 pF	Hewlett-Packard	5210A	A,M
True RMS voltmeter	Frequency range: 50 Hz to 1 MHz Input level: 1 mV to 300 V fs Accuracy: ±1%	Hewlett-Packard	3400A	A,M
Comb reference generator	Frequency range: 1 MHz to 500 MHz Markers at 1, 10, 100 MHz increments accurate to ±0.01% Output level: 0 dBm Residual FM: 2.5 Hz in 40 kHz bandwidth	Hewlett-Packard	8406A	A,M
Mixer	Frequency range: 0.2 MHz to 500 MHz (L and R) dc to 500 MHz (I port) Conversion loss: 6 dB Isolation: 50 dB Impedance: 50Ω	Watkins-Johnson	WJ-M1	A,M
Variable Electronic Filter with 40 dB Amplifier	Frequency ranges: 1 Hz to 1 MHz low pass 1 Hz to 100 kHz high pass Frequency accuracy: ±1% Attenuation slope: 24 dB/octave; 80 dB/decade Insertion loss: ±0.1 dB Distortion: 0.1% Input impedance: 22 MΩ, 75 pF Output impedance: 50Ω Amplifier gain: 40 dB in 10 dB steps Gain accuracy: ±0.1 dB	Ithaco	4213-02	A,M
Spectrum analyzer	Frequency range: 50 kHz to 1.3 GHz Scan width: 2 kHz/div to 100 MHz/div Dynamic range: >65 dB Input impedance: 50Ω	Hewlett-Packard	141T/8552B/ 8554B	A,M

Table 6-1. Test Equipment Requirements (Cont.)

Instrument	Minimum Specifications	Recommended		Use*
		Manufacturer	Model	
Tunable notch filter (continuously tunable)	Frequency ranges: 48 to 95 MHz 63 to 125 MHz 125 to 250 MHz 250 to 500 MHz Center frequency rejection: 50 dB Input/output impedance: 50Ω	Telonic	TTR72-3EE TTR95-3EE TTR190-3EE TTR375-3EE	A,M
Step attenuator (1 dB steps)	Range: 0 to 101 dB in 1 dB steps Frequency: 50 kHz to 512 MHz Accuracy: 0.5 dB VSWR: 1.2	Kay Elemetrics	439A	A,M
Step attenuator (0.1 dB steps)	Range: 22.1dB in 0.1 dB steps Frequency: 50 kHz to 512 MHz Accuracy: 0 to 0.5 dB: ±0.05 dB/step 1 to 22.1 dB: ±0.3 dB step	Kay Elemetrics	1/439A	A,M
Crystal detector (high frequency)	Frequency range: 10 MHz to 1.3 GHz Frequency response: ±0.5 dB SWR: <1.4 Sensitivity: 0.1V output with 0.4 mW input power Maximum input power: 100 mW	Singer	1001A with 1405 low pass filter	A,M
Diode detector (low frequency)	Frequency range: 350 kHz to 1000 MHz Frequency response: ±0.5 dB Sensitivity: 0.1V output with <0.4 mW input SWR: <1.25 Input impedance: 50Ω	Singer	1006	A,M
Receiver (EMI/field intensity meters)	Frequency range: 30 MHz to 1 GHz Gain flatness: ±1 dB Signal range: 140 dB (0.1 uV to 1.0V) Voltage measurement accuracy: ±2 dB RF input impedance: 50Ω	Singer	NM-37/57	A,M
Dc/Ac DVM	Voltage ranges: Dc: ±199.9 mV to ±1000V Ac: 199.9 mV to 1000 V Input impedance: 10 MΩ, 100 pF Accuracy: Dc: ±(0.1% rdg + 1 digit) Ac: ±(0.7% + 2 digits)	Fluke	8000A	A,M
Attenuator (6 dB)	Frequency range: 50 kHz to 512 MHz SWR: 1.15 to 1.40 Attenuation: 6 dB	Weinschel	2-6 (N connectors)	A,M
Low noise amplifier	Frequency range: 10 kHz to 512 MHz Gain: 20 dB min. Input/Output impedance: 50Ω	Singer	603001	A,M
50Ω load	Frequency range: 50 kHz to 512 MHz VSWR: 1.03 Power: 1 kW peak Impedance: 50Ω	Weinschel	535 MN (N male)	A,M
One inch loop Antenna	2 turns one inch diameter loop one inch from end of holder	Singer	2-005292	A,M
Modulation meter	Frequency ranges: Input: 5 MHz to 512 MHz Variable oscillator: 7 MHz to 512 MHz Calibration accuracy: 3% Input level: 3 mV to 10 V FM deviation: ±3 kHz, ±10 kHz AM: 30%, 100% modulation	Radiometer	AFM2	A,M

Table 6-1. Test Equipment Requirements (Cont.)

Instrument	Minimum Specifications	Recommended		Use*
		Manufacturer	Model	
Distortion analyzer	Frequency range: 5 Hz to 600 kHz Input level: 0.245 V for 0 dB set level Accuracy: 0.1% Input impedance: 600Ω	Hewlett-Packard	331A	A,M
Audio generator	Frequency range: <50 Hz to >20 kHz Frequency accuracy: ±2% Distortion: <1% Output: 0V to 2V rms Impedance: 50Ω or 600Ω	Hewlett-Packard	651B	A,M
Synthesized signal generator	Frequency range: 50 kHz to 512 MHz RF output: +6 dBm max. Calibrated output: 0.05 uV to 500 uV Uncalibrated output: 500 uV to 5 mV Frequency accuracy: 1×10^{-6} Residual FM: 100 Hz in 40 kHz bandwidth	Singer	FM-10C/CS with RFM-10D module (adjusted for +6 dBm output)	A,M
RF signal generator	Frequency range: 61 kHz to 512 MHz Output level: -110 dBm to 0 dBm Frequency stability (locked) <1 ppm/24 hrs. Output impedance: 50Ω	Singer	6106	A,M
600Ω termination	Frequency range: 50 kHz to 512 MHz	Singer	603002	A,M
Directional coupler	Frequency range: 225 MHz to 460 MHz Nominal coupling: 10 dB Insertion loss: 0.2 dB VSWR: 1.10 to 1.15 Impedance: 50Ω	Narda	3000-10	A,M
Adapter	Locking GR874 connector Type N plug Impedance: 50Ω	General Radio	874-QPNL	A,M
Adjustable stub	Frequency range: 50 kHz to 512 MHz 50 cm sliding short in coax line to locking GR-874 connector	General Radio	874-D50L	A,M
VSWR meter	1 kHz center frequency	HP	415D	A,M
Sweep network analyzer	Frequency range: 100 kHz to 1.3 GHz Dynamic range: 60 dB Measures power levels: -40 dBm to +20 dBm Independent measurement channels: 2	Singer	8000/7051	A
Sweep generator	Frequency range: 1 MHz to 1.4 GHz Sweep width: CW to 500 MHz Sweep rate: 50/s to 1/100 s Power output: +10 dBm	Wavetek	2001	A
Oscilloscope	Frequency response: dc to 350 MHz	Tektronix	7904	A,M
2-channel vertical amplifier dual time base	Sensitivity: 5 mV/cm	Tektronix	7A24	A,M
FET high impedance probe with attenuator head	Input impedance: 1 MΩ shunted by >1.5 pF	Tektronix Tektronix	7B92 P6201	A,M A
Spectrum Analyzer	Frequency response: 100 kHz to 1.8 GHz continuously variable	Tektronix	7L12	A
Low frequency oscilloscope	Frequency response: dc to 2 MHz	Tektronix	5112	A
2 channel vertical amplifier	Dual beam display Sensitivity: 1 mV/cm to 5 mV/cm Input impedance: 1 MΩ, 51 pF		5A18N	

Table 6-1. Test Equipment Requirements (Cont.)

Instrument	Minimum Specifications	Recommended		Use*
		Manufacturer	Model	
Dc power supply	Output: 12 V at 2.5 A	Harrison	6291A	A
Ac power supply	Output: 0 V to 5 V at 10 mA Regulation: ±5%	Hewlett-Packard	721A	A
Variable transformer	Output: 0 V to 230 V ac	General Radio	100-R	A
Non-metallic screwdriver	Non-inductive Blade width: Approx. 1/16 inch	Industry Standard		A
Cable Assembly	Adapter cable, BNC female to SMB male	Singer	2-005538-001	M
Cable Assembly	Adapter cable, BNC female to SMB female	Singer	2-005538-002	M
Adapter	Printed wiring board to SMB male	Singer	2-005537-001	M
Adapter	Mixer to SMB male	Singer	2-005536-001	M

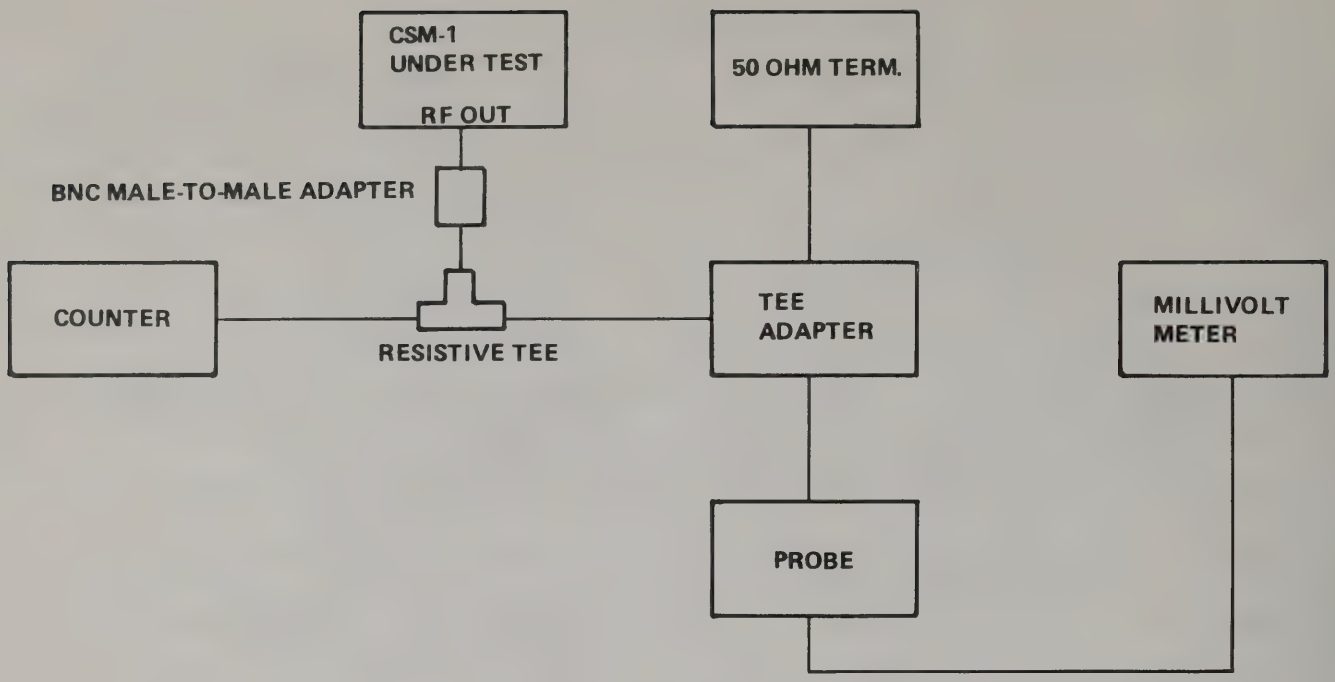

Figure 6-1. Warm-up Test

6.5 FREQUENCY ACCURACY AND SPECTRAL PURITY TESTS

6.5.1 Frequency Accuracy Tests

Specifications:

Frequency Accuracy with the continuously variable oscillator out: ±1 ppm. Frequency Accuracy with the continuously variable oscillator in (0-100 Hz operation):

$$\pm [1 \text{ ppm} + 5 \text{ Hz}] \text{ at } 25^{\circ}C$$

at any other temperatures

$$\pm [1 \text{ ppm} + 5 \text{ Hz} + 0.2 \text{ Hz } \Delta T]$$

ΔT: Temperature difference between ambient temperature and 25°C, in °C

Description:

The accuracy of the synthesizer frequency is tested at several frequencies with the variable oscillator in and out of operation.

Equipment:

1 ea Frequency Counter, Dana 8130

Procedure:

Connect the counter to the RF OUTPUT BNC connector of the CSM-1 under test. Set the power level to 0 dBm. Set the CSM-1 0-100 Hz dial to OUT and FUNCTION switch to GENERATE. Set the frequency controls to the settings listed below and verify that the frequency counter indication is within the specified tolerance limits.

This test can be repeated at any RF frequency desired.

NOTE

Least frequency dial ("0-100 Hz" dial) set to "OUT" means that the variable oscillator is switched out of the synthesizer, and this dial frequency is fixed at zero. Least frequency dial ("0-100 Hz" dial) set to "0" means that the variable oscillator is switched in the synthesizer and the dial frequency is zero.

Frequency Dials	Nominal Frequency (MHz)	Tolerance Limits (MHz)		
000.0500 OUT	0.05000000	0.04999995	to	0.05000005
000.0500 O	0.05000000	0.04999495	to	0.05000505*
001.0000 OUT	1.000000	0.999999	to	1.000001
001.0000 O	1.000000	0.999994	to	1.000006*
050.0000 OUT	50.000000	49.999950	to	50.000050
050.0000 O	50.000000	49.999945	to	50.000055*
512.0000 OUT	512.000000	511.999488	to	512.000512
512.0000 O	512.000000	511.999483	to	512.000517*

*If the ambient temperature level varies from 25°C, add 0.2 ΔT to the tolerance limits above. ΔT is equal to the difference between ambient temperature and 25°C in degrees C.

6.5.2 Variable Frequency Oscillator Accuracy Test

Specifications:

Accuracy of Variable Frequency Oscillator dial: ±0.5 major division (total range: 10 major divisions).

Description:

The "0-100 Hz" Frequency dial is set to given values and the frequency of the synthesizer is measured with the Variable Frequency Oscillator switched into the 100 Hz decade, the 1 kHz decade, the 10 kHz decade and the 100 kHz decade.

Procedure:

Leave equipment set up as in Test Number 6.5.1. Set the "0-100 Hz" dial and the mainframe frequency controls to the settings listed below, and verify that the frequency counter indication is within the specified tolerance limits.

6.5.3 Residual FM Test

Specifications:

The rms value of the residual FM in a bandwidth of 20 Hz to 3 kHz shall be less than 25 Hz at any output frequency.

Description:

An FM discriminator is used to measure FM deviation. A 100 MHz crystal derived comb generator (as a reference signal Generator) and a mixer are used to down-convert the CSM-1's RF output within the range of the discriminator. The discriminator output is filtered with a 20 Hz to 1.5 kHz bandpass filter and amplified and then measured with a TRMS voltmeter. The voltmeter reading, in mV rms, is proportional to the rms frequency deviation due to the residual FM, in a signal bandwidth of 3 kHz since the discriminated signal contains both the lower and upper 1.5 kHz frequency band around the carrier.

NOTE

This test measures the total residual FM of both generators. Therefore, the comb reference generator must have residual FM that is at least 10 times less than the specification for the CSM-1.

Equipment

FM Discriminator:	General Radio 1142A
TRMS Voltmeter:	Hewlett Packard 3400A
Reference Generator:	Hewlett Packard comb Generator 8406A
Mixer:	Watkins-Johnson M-1
Variable Electronic Filter with 40 dB amplifier:	Ithaco Model 4213-02 (2 each) (02 Option: 40 dB amplifier)
Broadband Amplifier:	Singer No. 603001 (2 each)

Procedure:

Set up the equipment as shown on Figure 6-2

Frequency Controls	0 – 100 Hz Dial	Frequency (MHz)	Tolerance Limits (MHz)
010.000V	5	10.000500	10.000440 to 10.000560
010.00V0	5	10.005000	10.004500 to 10.005500
010.0V00	5	10.050000	10.045000 to 10.055000
010.V000	5	10.500000	10.450000 to 10.550000
010.V000	0	10.000000	9.950000 to 10.050000
010.V000	10	11.000000	10.950000 to 11.050000

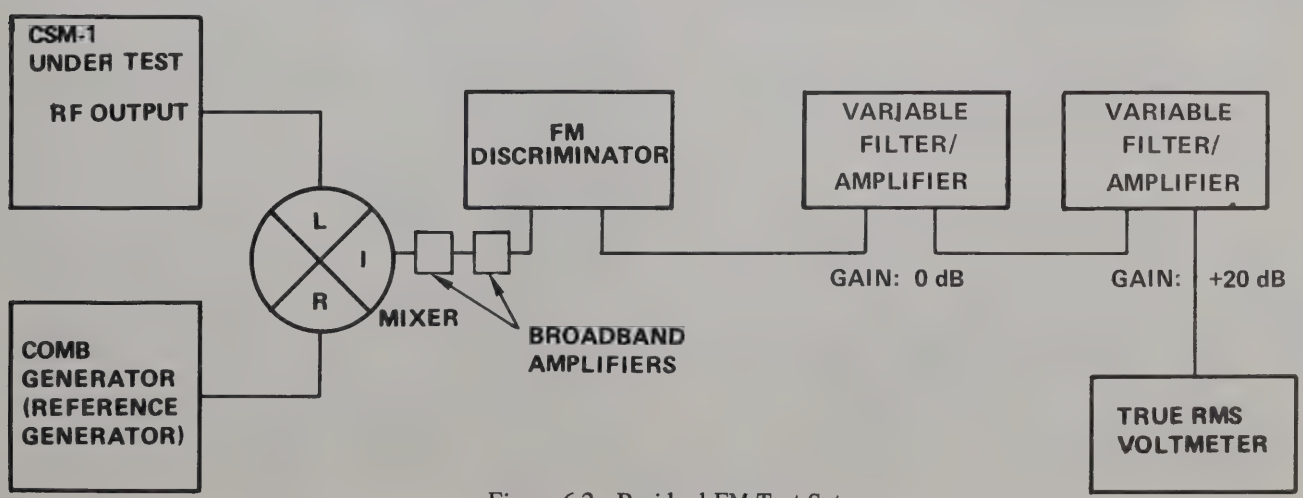

Figure 6-2. Residual FM Test Setup

Set the CSM-1 controls as follows:

FUNCTION switch:	GENERATE
SWEEP WIDTH Control:	OFF
Frequency dials at:	400.1000 MHz (0-100 Hz Var. Freq. Osc. at OUT)
RF OUTPUT LEVEL dials:	0 dBm
AMPLITUDE MODULATION switch:	OFF

On the comb generator, depress the 100 MHz push button and set the Output Amplitude Adjust to MAXIMUM. Use "100 MHz COMB" output as RF output.

Set the Discriminator's range to 150 kHz. Adjust Input Waveform Control until the Discriminator reading is stable at about 100 kHz.

Set the two variable filters as follows:

High pass: 20 Hz; Low pass: 16 kHz; set the gain of the first filter to 0 dB and the second filter to 20 dB, Pulse Response at NORMAL; CIRCUIT GROUND to POWER GROUND switch (rear panel) to OPEN.

The signal out of the variable filter is 1.0 mV rms per 1 Hz (rms) of residual FM deviation, and the average voltmeter reading should be less than 25 mV rms.

If the residual FM has to be measured at any RF frequency other than 100 MHz, 200 MHz, 300 MHz or 400 MHz, an RF synthesizer with a residual FM of less than 3 Hz in a 20 Hz to 40 kHz bandwidth can be substituted for the comb generator.

6.5.4 Harmonics Test

Specifications:

Harmonic output (at any output level) shall be at least 30 dB below the fundamental over the entire frequency range.

Description:

A spectrum analyzer used to measure harmonics as the CSM-1 frequency is varied from 0.05 MHz to 512 MHz.

Equipment:

Spectrum Analyzer: Hewlett Packard 141T/8552B/ 8554B

Procedure:

Connect the RF OUTPUT of the CSM-1 to the analyzer's input after setting the CSM-1 controls as follows:

AMPLITUDE MODULATION switch:	OFF
SWEEP WIDTH control:	OFF
FUNCTION switch:	GENERATE
RF OUTPUT LEVEL:	0 dBm
Frequency dials:	000.0500 OUT

Set the Spectrum Analyzer to measure harmonics 30 dB below the fundamental from 50 kHz to 200 kHz. Set Input Attenuation to 40 dB. Resolution Bandwidth to 30 kHz, Frequency Scan per Division (scan width) to 100 kHz, Scale to LOG (10 dB/div), and Scale Reference Level to +0 dBm.

Adjust the Analyzer's frequency controls to set the CSM-1 fundamental frequency at 50 kHz on the left edge of the display.

Switch the 10 kHz steps, then the 100 kHz and again the 10 kHz steps up to 200 kHz, checking that all harmonics are more than 30 dB below the fundamental. Continue increasing the CSM-1 frequency, setting the Spectrum Analyzer controls as shown in Table 2-4.

NOTE

If any harmonic below 512 MHz appears to be out of specification, remove any possible analyzer error and remeasure the harmonic as follows:

a. Tune the Generator to the frequency of the harmonic.

b. Using the Analyzer's IF attenuator, step the signal down 30 dB on the display and note the -30 dB point on the display.

c. Step the IF attenuator up 30 dB and retune the Generator to its original setting.

d. Using the -30 dB point noted on the display as a reference, remeasure the harmonics.

Set the Spectrum Analyzer and the CSM-1 frequency as shown below, tune the Analyzer frequency so that the Fundamental is always at the left edge of the CRT display.

Resolution Bandwidth	Frequency Span/Div	CSM-1 Frequency
30 kHz	100 kHz	50 kHz – 200 kHz
100 kHz	500 kHz	200 kHz – 1 MHz
100 kHz	2 MHz	1 MHz – 5 MHz
300 kHz	10 MHz	5 MHz – 25 MHz
300 kHz	50 MHz	25 MHz – 100 MHz
300 kHz	100 MHz	100 MHz – 512 MHz

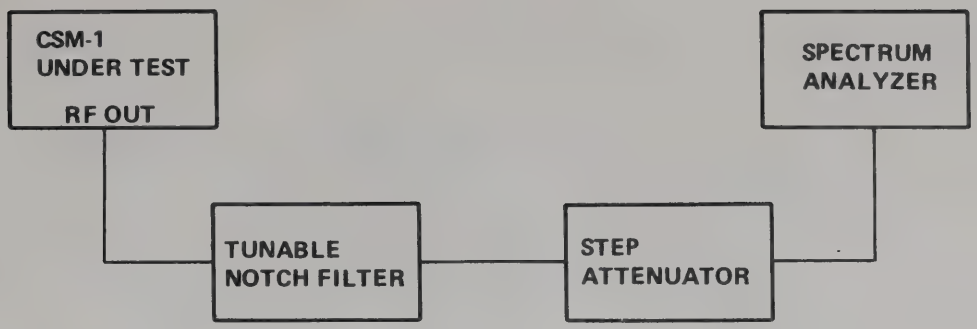

Figure 6-3. Setup to Measure Spurious Outputs.

6.5.5 Spurious Outputs:

Specifications:

Subharmonics and non-harmonic spurious Outputs (excluding frequencies within 20 kHz of the carrier whose effects are specified under residual AM and FM): Greater than 50 dB below the carrier.

Description:

A notch filter is used to remove the fundamental. All spurious signals are then measured with a spectrum analyzer.

Equipment:

Tunable Notch filter:	Telonic TTR 375-3EE
Step Attenuator:	Kay 439A
Spectrum Analyzer:	Hewlett Packard 141T/8552B/ 8554B

Procedure:

Connect the equipment as shown in Figure 6-3.

Leave the CSM-1 controls as in Test 6.5.4.

Set the Step Attenuator to 50 dB, the Analyzer's Input Attenuator to 0 dB, Scale switch to LOG (10 dB/div) and Reference Level controls to -30 dBm. Set Resolution Bandwidth to 30 kHz, Frequency Span per division (scan width) to 1 MHz, and tune the Frequency controls to set 500 MHz at the CENTER OF THE DISPLAY. Set CSM-1 Frequency dials to 500.0000 OUT. Detune the notch filter and adjust the Reference Level Vernier to set the 500 MHz peak to the TOP (reference graticule line of display). Tune the notch filter until the output of the fundamental drops at least 30 dB. Remove 30 dB from RF Step Attenuator. Tune the Spectrum Analyzer slowly from 507 MHz to 500 kHz center frequency. All spurious signals should be below the -20 dB graticule on the display indicating -50 dB below the carrier over the total range examined (0 to 512 MHz). This test can be performed at any other RF frequency by returning the notch filter or replacing it if the RF frequency is outside the notch filter frequency range.

6.5.6 Residual AM Test

Specifications:

Residual AM stated as averaged rms value in a 20 Hz to 10 kHz bandwidth: At least 60 dB below the carrier.

Description:

The RF is detected in a broadband diode detector. The detected AC portion of the detector output is measured with a TRMS voltmeter. The voltmeter is calibrated with a measured amount of amplitude modulation from the CSM-1. Then the AM is removed and the CSM-1's residual AM is read directly from the voltmeter.

Equipment:

RMS Voltmeter	H-P Model 3400A
Detector	Singer Model 1001A
Variable Filter/Amplifier	Ithako Model 4213-02

Procedure:

Equipment is connected as in Figure 6-4.

Set the CSM-1 controls as follows:

Frequency dials:	500.1000 OUT
RF OUTPUT LEVEL:	0 dBm
FUNCTION switch:	GENERATE
AMPLITUDE MODULATION switch:	1 kHz
VERTICAL MODE switch:	VERT SET
SWEEP MODE switch:	HI
SWEEP WIDTH control:	OFF

Set the high pass cutoff frequency on the Variable filter to 20 Hz and the low pass cutoff frequency to 10 kHz. Push the 40 dB GAIN button. Set CIRCUIT GROUND TO POWER GROUND switch on rear panel to OPEN. Adjust the HORIZ POS control so that the CRT trace is at VERT SET (lowest line on display). Switch to CARR SET and adjust the CARRIER LEVEL control until the trace lines up with the LEVEL SET indication on the CRT. Switch to 30% AM and adjust the TONE LEVEL control until the CRT indicates 10% AM. Note voltmeter reading in dB.

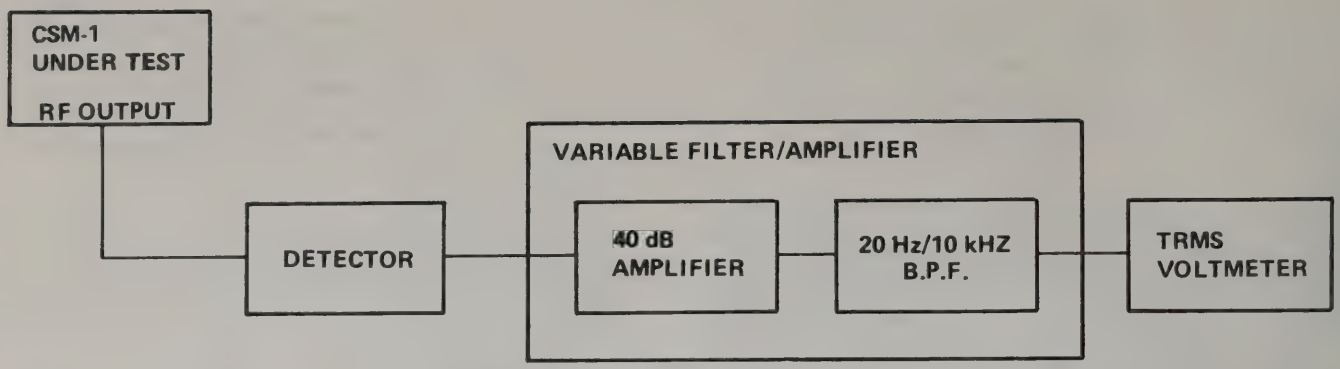

Figure 6-4. Setup to Measure Residual AM

Set CSM-1 AMPLITUDE MODULATION switch to OFF. The reading of the voltmeter should be more than 40 dB below the reference reading in the previous paragraph. (The 10% AM, after detection, is 20 dB below the carrier level. Residual AM is then 20 dB +40 dB = 60 dB below the carrier).

6.6 SIGNAL GENERATOR MODE TESTS

6.6.1 Output Level Accuracy Test

Specifications:

1. Absolute carrier level accuracy (power level into a 50 ohm load) at -20 dBm, at 250 MHz: ±1.0 dB.

2. Power Level Flatness over the 50 kHz to 512 MHz frequency range (at -20 dBm): ±2.0 dB maximum, referred to level at 250 MHz.

Auxiliary Level Accuracy Specifications:

1. Power Level Flatness over any 2:1 frequency range:
   ± 1.0 dB maximum

2. Maximum Inaccuracy of total insertion loss of 10 dB step attenuator:

   ±0.8 dB. up to 50 dB
   ±(0.8 +0.2 dB/each 10 dB step above 50 dB)

3. Maximum Inaccuracy of 1 dB step attenuator:

   ±0.3 dB/1 dB step,
   accumulative error ±0.7 dB maximum.

Description:

The RF level accuracy at -20 dBm is measured over the entire frequency range using an RF Millivoltmeter.

The range from 0 dBm to -20 dBm (which includes a test of the 1 dB step attenuator accuracy, and the accuracy of the first 2 steps of the 10 dB attenuator) is measured using the same RF Millivoltmeter.

For all other levels the RF substitution technique is used: A spectrum analyzer is used to indicate a reference level which is equal to the maximum output level of the CSM-1 (0 dBm) minus the sum of the insertion losses of the CSM-1 10 dB output attenuator, the calibrated RF Step attenuator, which is the standard, and the 6 dB attenuator pad as shown in Figure 6-5. This pad minimizes mismatch errors. By inserting 80 dB in the standard step attenuator, with the CSM-1 1dB step attenuator at 0 and the 10 dB step attenuator at -20 dBm (20 dB), the nominal level at the output of the 6 dB pad is -106 dBm. The insertion loss of the CSM-1 attenuator is increased in 10 dB steps and at the same time the insertion loss of the standard attenuator is decreased until the indication is the same as before. The CSM-1 output level error is equal to the observed deviation from any integer 1-dB step on the standard attentuator.

EQUIPMENT:

Calibrated RF Attenuator:	Kay 439 and 1/439A
Probe:	Boonton 91-12F with Tee Adapter 91-14A and 50 ohm termination 91-15A
Spectrum Analyzer:	HP 141T/8552B/8554B with external input amplifer (20 to 30 dB gain at 512 MHz). NOTE 1.
6 dB Attenuator:	Weinschel 2-6

Procedure:

Connect equipment as shown in Figure 6-5.

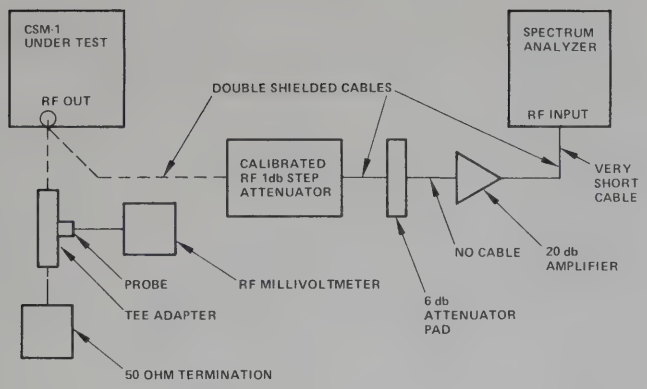

Figure 6-5. Setup to Measure Output Level Accuracy

Set the CSM-1 controls as follows:

FUNCTION switch:	GENERATE
AMPLITUDE MODULATION switch:	OFF
SWEEP WIDTH control:	OFF
RF FREQUENCY dials:	250.0000 OUT
RF OUTPUT LEVEL controls:	-20 dBm (1 dB step attenuator at 0, 10 dB step attenuator at -20 dBm)

Push the -20 dBm button on the RF voltmeter. Connect the Tee Adapter assembly to CSM-1 RF output. The indicated level on the RF voltmeter should be -20 dBm ±1.0 dB.

Set the RF frequency to the following values:

50 kHz, 1 MHz, 10 MHz, 50 MHz, 125 MHz and 512 MHz.

Record the level readings for each frequency:

The power level, referred to the 250 MHz level, should be within ±2.0 dB for 50 kHz, 1 MHz, 10 MHz and 50 MHz, and within ±1.0 dB for 125 MHz and 512 MHz.
Set the frequency to 512 MHz. Switch 10 dB step attenuator to -10 dBm. Decrease the power level in 1 dB steps from -10 dBm to -20 dBm using the CSM-1, one dB step attenuator. Record the difference between the actual changes in the level for each 1 dB step and 1.00 dB, including the sign of the difference (for instance, +0.05 dB). The maximum error of each 1 dB step should be less than ±0.3 dB, the maximum cumulative error (algebraic sum of all individual errors) should be less than ±0.7 dB. Switch the 1 dB step attenuator to 0 dB, and set the 10 dB step attenuator to 0 dB. Record level. The indicated power level should be 0 dBm ±1.75 dB. Disconnect the probe assembly.

Set the CSM-1 attenuators as follows:

1 dB step attenuator at 0

10 dB step attenuator at -20 dBm

Connect the standard attenuator, 6 dB attenuator, amplifier and spectrum analyzer as shown in Figure 6-5.

Set the Standard RF attenuator to 70.0 dB

Set up the spectrum analyzer to observe the CSM-1 output level as follows:

Frequency	512 MHz
Bandwidth	100 kHz
Scan Width/division	100 kHz
Input Attenuation	0 dB
Scan Time/division	10 ms
Log Ref Level Switch	-60 dBm
Video Filter	100 Hz
Scan Mode	Int.
2 dB/10 dB log/lin	2 dB
Scan Trigger	Auto

Adjust the Frequency control to display a centered response pattern and switch Tuning Stabilizer on.

Adjust the Log Ref control to place the tip of the display on the second line down from the top of the graticule (line 6).

Verify 2 dB/division by switching in 2 dB on the standard attenuator. (If this is not within ±0.2 dB, which is half a minor division, the spectrum analyzer should be calibrated.)

Switch the CSM-1 10 dB step attenuator to -30 dBm and set the standard attenuator to 60 dB. The reading should be within ±0.8 dB of the 0 dB reference line. (2 minor divisions).

Switch the CSM-1 attenuator to -40 dBm and set the standard attenuator to 50 dB. The reading should be within ± 0.8 dB of the dB reference line.

Switch the CSM-1 attenuator to -50 dBm and repeat the above procedure; continue this procedure for all steps but the last step on the CSM-1 10 dB step attenuator. The maximum allowed changes in the readings are:

CSM-1 Attenuator (dBm)	Standard Attenuator (dB)	Spectrum Analyzer Indication (dB)	Minor Divisions
-50	40	±0.8	2
-60	30	±1.0	2.5
-70	20	±1.2	3
-80	10	±1.4	3.5
-90	0	±1.6	4

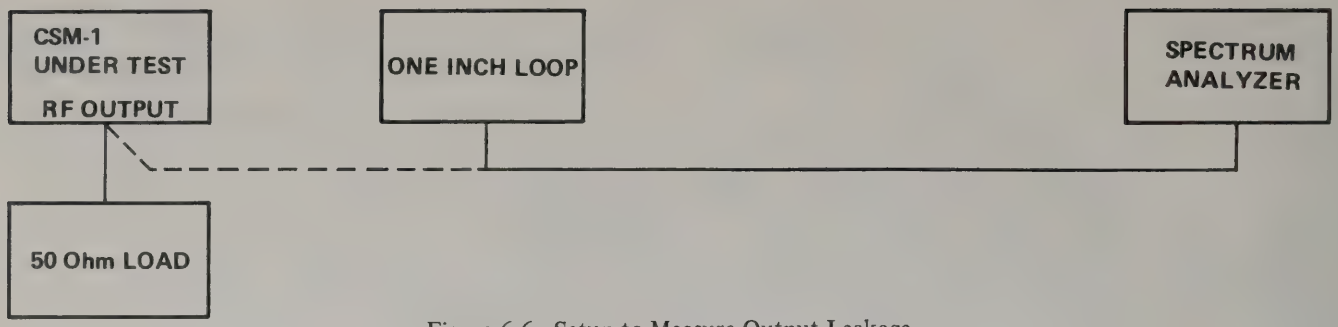

Figure 6-6. Setup to Measure Output Leakage

6.6.2 Output Leakage Test

Specifications:

RF leakage field at any selected CSM-1 frequency measured one inch away from any surface of the CSM-1 shall induce less than 50 uV in a 2 turn, 1 inch diameter loop, terminated in 50 ohms, with the RF INPUT, the RF OUTPUT, the AUDIO OUTPUT, and the TONE OUTPUT of the CSM-1 properly terminated and the RF level set to 1 microvolt.

Description:

A loop antenna is held one inch from all surfaces of the Signal Generator and any leakage monitored with a Spectrum Analyzer. The loop antenna is suspended in a molding so that when the molding is in contact with a surface, the loop antenna is one inch from the surface.

NOTE

1. The use of a screen room is necessary to reduce external radiated interference during this test.
2. To avoid disturbing the antenna's field and causing measurement error, grasp the antenna at the end that has the BNC connector.

Equipment:

One inch loop antenna:	Singer P/N 2-005292
Spectrum Analyzer:	Hewlett Packard 141T/8552B/8554B
50 ohm load:	Weinschel 535 MN

Procedure:

Connect the model CSM-1 to spectrum analyzer, as shown in Figure 6-6, dotted lines. Set model CSM-1 controls as follows:

RF Frequency:	100.00 MHz
FUNCTION switch:	GENERATE
AMPLITUDE MODULATION switch:	OFF
SWEEP WIDTH control:	OFF
RE OUTPUT LEVEL controls:	-87 dBm

Set Spectrum Analyzer's resolution bandwidth to 10 kHz, input attenuation to 0 dB, frequency scan per division (scan width) to 20 MHz, scale to LOG (10 dB per division), scale reference level controls to -50 dBm, and scale center frequency controls to 100 MHz. Calibrate the analyzer by using the scale reference level controls to set the -87 dBm signal from the Model CSM-1 to the -37 dB graticule line on the display. Disconnect the Model CSM-1 generator from the analyzer and connect a 50 ohm termination to the Model CSM-1 RF OUTPUT.

Connect the one-inch loop antenna to the analyzer. Pass one end of the loop antenna cylinder within one inch of all of the surfaces of the Model CSM-1, with the analyzer's center frequency controls set to 100 MHz. Repeat procedure at 500 MHz. All signals and noise should be below the -23 dB graticule line on the analyzer's display (below -73 dBm) from 50 kHz to 512 MHz.

6.6.3 Output Impedance and VSWR Test

Specifications:

Impedance: 50 ohm, AC coupled, VSWR less than 1.5:1 at any power level from 0 dBm to -110 dBm over entire frequency range.

Description:

The CSM-1's output signal is reflected back into the RF OUTPUT jack by a coaxial short at the end of an adjustable stub (a variable length of airline). This reflected signal is re-reflected by any mismatch at the jack. The re-reflected signal combines with the output signal according to the relative phase and magnitude of the two signals. The combined incident signal amplitude is detected and measured by a VSWR meter. Maximum and minimum signal levels are noted as the electrical length of the stub is varied (i.e., the distance from the RF OUTPUT jack to the coaxial short is varied). VSWR is then read directly from the VSWR meter.

Equipment:

Directional Coupler:	Narda Model 3000-10
Adapter:	GR 874 to Type N Male, GR Model 874-QNPL
Adjustable Stub:	GR 874-D50L
VSWR Meter:	Hewlett Packard 415D
Detector:	Singer Model 1001A

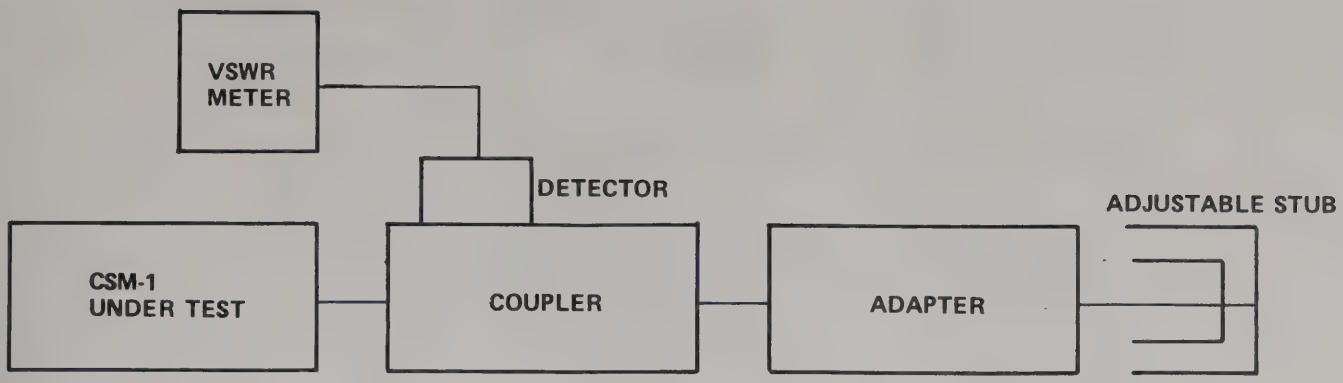

Figure 6-7. Setup to Measure Output Impedance and VSWR

Procedure:
Connect equipment as shown in Figure 6-7.

Set CSM-1 controls as follows:

RF Frequency:	400.00 MHz
FUNCTION switch:	GENERATE
AMPLITUDE MODULATION switch:	1 kHz
SWEEP WIDTH control:	OFF
RF OUTPUT LEVEL controls:	0 dBm (10 dB step attenuator at 0 dBm, 1 dB step attenuator at 0)

Set up a 1 kHz amplitude modulation of 70% (±10%). Adjust the tuned frequency adjustment on the 415 VSWR meter for maximum indication. Adjust the stub for a maximum indication on the VSWR meter. Adjust VSWR meter indication with gain and attenuator control for full scale (marked 1.00). Adjust the stub for a minimum indication. Indicated VSWR should be 1.5 or lower.

Repeat with 1 dB step attenuator set to 10 dB. Again, indicated VSWR should be 1.5 or lower.

Repeat with 10 dB step attenuator set to -10 dBm, 1 dB step attenuator set to 0. Again, indicated VSWR should be 1.5 or lower.

6.6.4 Internal Modulation Oscillator Frequency Test

Specifications:

Two fixed internal modulation frequencies are required:

400 Hz, and 1000 Hz (front panel switch selectable).
Frequency Accuracy: ±5%

Description:

The demodulated output of the CSM-1 is measured with a Counter to verify the two modulation frequencies and their accuracies.

Equipment:

Frequency Counter:	Dana 8130
Modulation Meter:	Radiometer AFM-2

Procedure:
Connect equipment as shown in Figure 6-8.

Set CSM-1 controls as follows:

RF Frequency dials:	100.0000 OUT
FUNCTION switch:	GENERATE
TONE FREQUENCY switch:	400 Hz
TONE LEVEL control:	Between 50% and 90%
VERT MODE control:	100% AM
AMPLITUDE MODULATION control:	ON
SWEEP WIDTH control:	OFF
RF OUTPUT LEVEL controls:	0 dBm

Set up Modulation Meter as follows:

Input Attenuators:	20 dB depressed
Local Oscillator Frequency:	102.0 MHz
IF BANDWIDTH switch:	400 kHz
METER switch:	FAST
MAN/AUTO switch:	MANUAL
LEVEL control:	2
FUNCTION switch:	LEVEL
METER RANGE switch:	100
Filter switch:	75 kHz
AF OUTPUT switch:	AC

Set counter to 1 sec time base.

Adjust TUNING CONTROL on the Modulation Meter until the output peaks. Turn the LEVEL control clockwise until the meter indication is well past full scale. Switch the MAN/AUTO switch to AUTOMATIC. Switch FUNCTION switch to IF CHECK and fine adjust the TUNING control until the meter reading is at IF CHECK point. Then switch to AM + and adjust the CSM-1 TONE LEVEL control until greater than 75% AM is indicated on the Modulation Meter.

Adjust trigger level on the Counter until stable counter reading is obtained. Counter should indicate between 380 to 420 Hz. Set TONE FREQUENCY switch to 1000 Hz. Counter should indicate between 950 Hz – 1050 Hz.

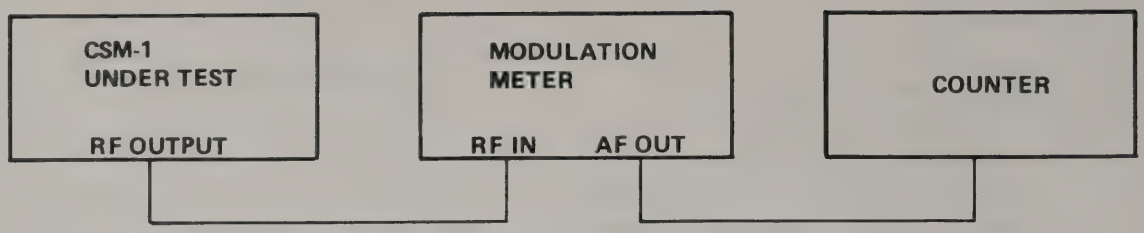

Figure 6-8. Setup for Measuring Internal Modulation Frequencies

6.6.5 Amplitude Modulation Range, Accuracy and Distortion Test

Specifications:

Amplitude Modulation Range:	0 - 95%, continuously adjustable
Total harmonic distortion:	0 - 30% AM: 3% 30 - 95% AM: 10%

Maximum inaccuracy between actual Amplitude Modulation and indicated Amplitude Modulation: ±8% F.S. (F.S. either 30% or 100%).

Description:

The RF output of the CSM-1 is amplitude modulated at the nominal modulation factors of 30% and 95% as indicated by the CSM-1 CRT, and the actual AM Factor measured with an AM meter. Since the Modulation Meter operates as a linear demodulator the distortion of the AC portion of the demodulated signal is measured with the Distortion Analyzer.

Equipment:

Modulation Meter:	Radiometer AFM-2
Distortion Analyzer:	Hewlett Packard 331A

Procedure:

Connect equipment as shown in Figure 6-9. Leave CSM-1 and Modulation Meter controls as shown in Test 6.6.4, except set the TONE FREQUENCY switch to 1 kHz and set up exactly 30% AM as indicated by the CSM-1 CRT. Set-up the Modulation Meter as described in Test 6.6.4. It should indicate between 27.6% and 32.4%. Calibrate the Distortion Analyzer at 1 kHz and measure distortion (should be less than 3%).

Increase the amplitude modulation to exactly 95% as shown on the AM meter. The CSM-1 CRT indication should be between 87.4% and 100%. Due to the distortion, the positive and negative AM factor indication might not be the same. Therefore, measure both AM factors and use the mean value:

$$\frac{(M+) + (M-)}{2}$$

as the indicated value. Measure the distortion at 95% AM as indicated on the Modulation meter. It should be less than 10%.

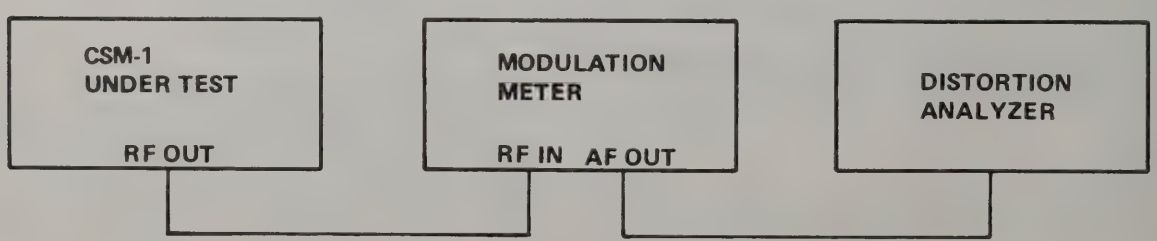

Figure 6-9. Setup for Measuring AM Accuracy and AM Distortion

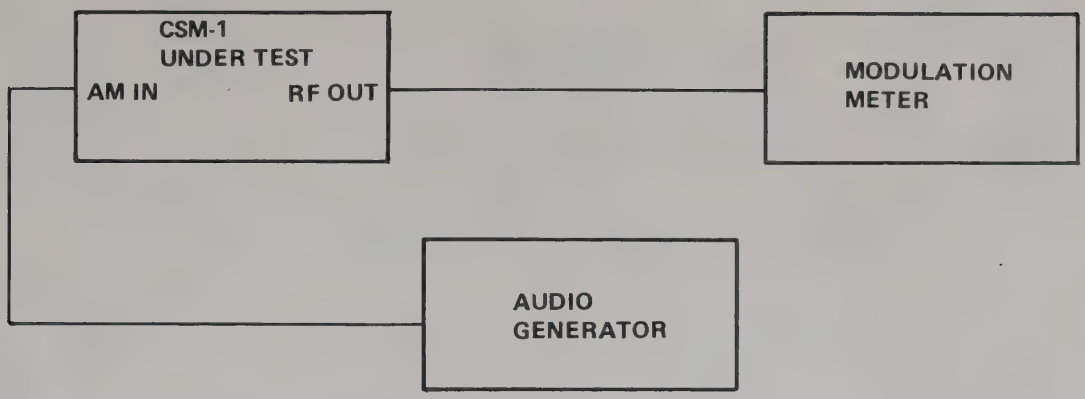

Figure 6-10. Setup for Measuring the AM Bandwidth

6.6.6 3 dB AM Bandwidth Test (Optional Test)

Specifications:

The variation of the amplitude modulation factor of the AM'd RF output with a constant modulating input voltage over a frequency range of 50 Hz to 20 kHz is less than ±3 dB, referenced to 1 kHz. The variation of the actual amplitude modulation factor versus the amplitude modulation factor indicated by the CSM-1 CRT is less than ±3 dB over the frequency range from 50 Hz to 20 kHz.

Equipment:

Audio Generator:	Hewlett Packard 651B
Modulation Meter:	Radiometer AFM-2

Procedure:

Set up equipment as shown in Figure 6-10.

Leave CSM-1 and the AM meter controls as shown in Test 6.6.5, except switch the TONE FREQUENCY switch to EXT AM. Set the frequency of the audio generator to 1000 Hz and the amplitude to 1.0 V rms. Using the TONE LEVEL control of the CSM-1 set the amplitude modulation factor as indicated by the AM meter to 50.0%. Record the CSM-1 CRT AM factor indication. Set the modulation frequency to 50 Hz and 20000 Hz. The AM meter indication should stay between 35.4% and 70.7%. The ratio of the indicated to the measured AM factor should stay between 0.707 and 1.414 over the same modulation frequency range.

6.6.7 Incidental FM Test

Incidental FM at 30% and 1 kHz modulation frequency:	100 Hz + 0.8 ppm of the carrier frequency (rms)

Description:

The incidental frequency modulation caused by the amplitude modulation process is determined by measuring the peak value of the frequency modulation at a modulation frequency equal to the AM frequency (bandpass filter at modulation frequency eliminates the residual FM).

The incidental FM is measured with a pulse type discriminator to eliminate any erroneous reading created by the AM process.

Equipment:

Audio Generator:	Hewlett Packard 651B
Modulation Meter:	Radiometer AFM-2
Variable Electronic Filter:	Ithaco 4213-02
TRMS Voltmeter:	Hewlett Packard 3400A

Procedure:

Set up equipment as shown in Figure 6-11. Set Audio Generator to 1 kHz, 1 V rms output.

Leave the modulation meter in the AM measuring mode. Leave all CSM-1 controls as in Test 6.6.7, except turn CSM-1 TONE LEVEL control counter-clockwise until the modulation meter indicates 30% AM.

Set Variable filter as follows:

High Pass:	800 Hz
Low Pass:	1.25 kHz
Gain:	0
Pulse Response:	NORMAL
Circuit Ground to POWER GROUND	
Rear Panel switch to OPEN	

Switch FUNCTION switch of Modulation Meter to + FM. Set RF INPUT Attenuators of AFM-2 to 10 dB. Set METER RANGE switch to 3 kHz full scale. Set FILTER switch to 3 kHz. Since AF output open circuit voltage is 1 V peak for full scale deflection the TRMS voltmeter should read less than 60 mV rms.

NOTE

If the measurement result is suspect, check for the influence of the following two error sources:

a. Residual FM of CSM-1 under test, and AM/FM meter: Place the AMPLITUDE MODULATION switch of the CSM-1 under test in the OFF position. The reading of the TRMS Voltmeter should drop to less than 10 mV rms. If the reading is higher, check the CSM-1 and the AM/FM meter for extreme residual FM.

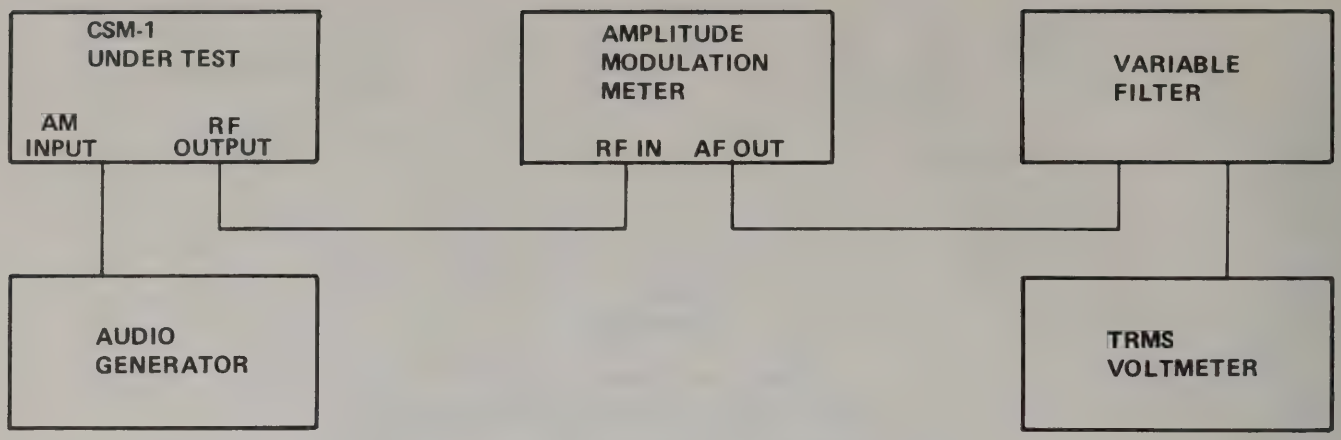

Figure 6-11. Setup for Incidental FM Under 30% AM Test

b. AM influence on FM measurement: If the RF level into the AM/FM meter is too low, the limiting and the signal level into the pulse type discriminator might not be sufficient. It should be possible to lower the RF level into the AM/FM meter by 10 dB without affecting the measurement result. If this is not possible, check the RF output level of the CSM-1 under test (0 dBm) and the input attenuator of the AM/FM meter (10 dB).

6.6.8 Sweep Width Test

Specifications:

Sweep width range (with 100 kHz decade at V position)

Maximum Sweep width range with 0 – 100 Hz dial set at "5":	0 to greater than 1 MHz
Maximum Sweep width range with 0 – 100 Hz dial at any setting:	0 to greater than 120 kHz

Description:

A Spectrum Analyzer is set up with a scan width of 100 kHz/Div. and a center frequency equal to the dialed center frequency of the CSM-1 under test. With the scan speed of the Spectrum Analyzer set to 10 msec/Div (10 scans per sec) and the sweep speed of the CSM-1 under test set to about 20 sweeps/sec, the display of the Spectrum Analyzer shows the sweep width of the CSM-1 under test.

Equipment:

Spectrum Analyzer: Hewlett Packard 141T/8552B/8554B

Procedure:

Set up equipment as shown in Figure 6-12.

Set CSM-1 controls as follows:

Frequency dials:	250.V 168
"V" dial: (0 – 100 Hz):	5
FUNCTION switch:	GENERATE
RF OUTPUT LEVEL control:	-10 dBm
AMPLITUDE MODULATION switch:	OFF
SWEEP MODE switch:	LO
SWEEP RATE control:	About 10 o'clock
SWEEP WIDTH control:	OFF

Set up Spectrum Analyzer for 100 kHz/Div scan width; 10 kHz resolution, 10 msec/Div sweep time, 20 dB RF attenuation inserted, log display. Center the CW output signal from the CSM-1 on the center of the Spectrum Analyzer CRT (coarse tune the Spectrum Analyzer to 250 MHz, and slowly fine tune in the stabilized mode). Turn the SWEEP WIDTH control to maximum (extreme clock-wise position). The spectrum width on the CRT display should exceed 10 Div. Move the V dial from "0" to "10". The sweep width should always be greater than 120 kHz.

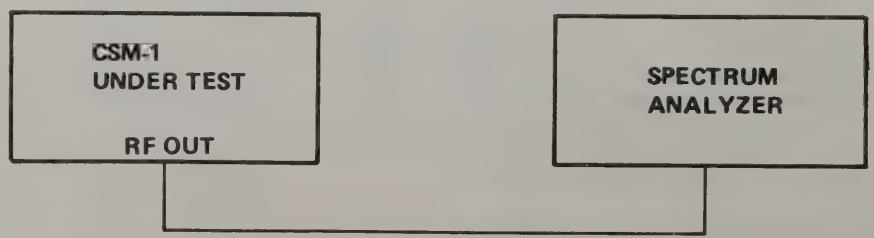

Figure 6-12. Setup for Sweepwidth Test

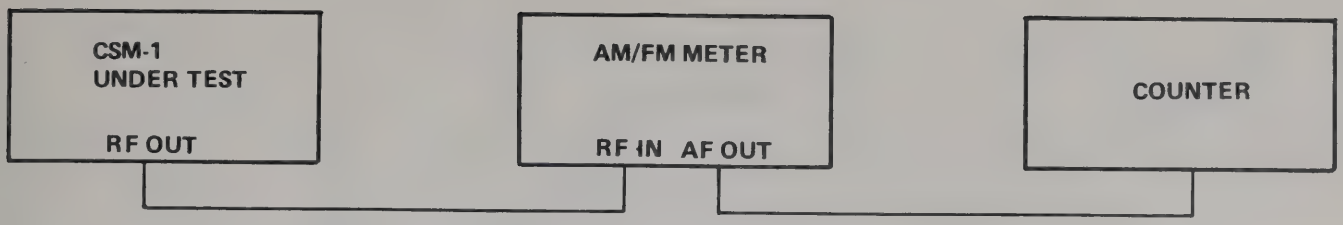

Figure 6-13. Setup for Sweep Rate Test

6.6.9 Sweep Rate Test

Specifications:

Sweep rate: Continuously adjustable between:
10 Sweep/second to
100 Sweep/second

Description:

A linear discriminator (AM/FM meter) is used to demodulate the sweeping RF signal. The demodulation signal (sawtooth) is fed into a counter which measures the sweeps per seconds.

Equipment:

Modulation Meter:	Radiometer AFM-2
Counter:	Dana 8130

Procedure:

Set up equipment as shown in Figure 6-13. Leave CSM-1 controls as set up for Test 6.6.8, except set the SWEEP RATE control to minimum (extreme counter-clockwise) and the SWEEP WIDTH control to minimum (extreme counter-clock-wise). Set the MODULATION METER RANGE switch to 300 kHz, the FILTER switch and the FUNCTION switch to FM: The counter should indicate approximately 10 Hz (12 Hz maximum). Set the SWEEP RATE control to maximum (extreme clock-wise). The counter should read greater than 100 Hz.

6.7 FREQUENCY METER MODE TESTS

6.7.1 Frequency Measurement Range, Accuracy and Resolution Tests

Specifications:

1. Range of Frequency Measurement:
   50 kHz – 512 MHz
2. Beat Indicator Frequency Range

Beat Light (internal):	0 to 20 Hz
Loudspeaker (internal) and AUDIO OUTPUT:	20 Hz to 10 kHz
Output Level of AUDIO OUTPUT:	3 V p-p minimum into 10 ohms

3. Accuracy of Frequency Measurement with Variable Oscillator Out: ± (1 ppm + beat indicator frequency)
4. Accuracy of Frequency Measurement with Variable Oscillator in
   0 – 100 Hz Decade: ± (1 ppm + 5 Hz + 0.2 Hz ΔT + beat indicator frequency)

NOTES

1. Beat light operation allows beat indication below one Hz, reducing the beat indication frequency error to less than 1 Hz.
2. ΔT is the difference between room (ambient) temperature and 25°C expressed in °C.

Description:

A frequency stable signal source set to a given frequency and having an output level of 1 mV rms (-47 dBm) is connected to the RF INPUT BNC connector. The frequency as determined with the CSM-1 is compared to the frequency measured with the external counter. An Oscilloscope measures the peak-to-peak AUDIO OUTPUT voltage with a load connected which presents a 10 ohm impedance. The frequency difference or "beat" is set successively to 1 Hz, 20 Hz, 1 kHz and 10 kHz and the beat light and AUDIO OUTPUT level observed.

Equipment:

Synthesized Signal Generator:	Singer FM-10C or FM-10CS with RFM-10D Module*
Calibrated Step Attenuator:	Kay 439A and 1/439A
Oscilloscope:	Tektronix 7904/7A24/7B92
10 ohm Load Resistor:	Allen Bradley 1/2 watt Resistor

*Output level required is +6 dBm (at 118.6532 MHz). The Model RFM-10D used with the Model FM-10CS Mainframe can provide this output level with an internal adjustment of A1A2R31 in the mainframe.

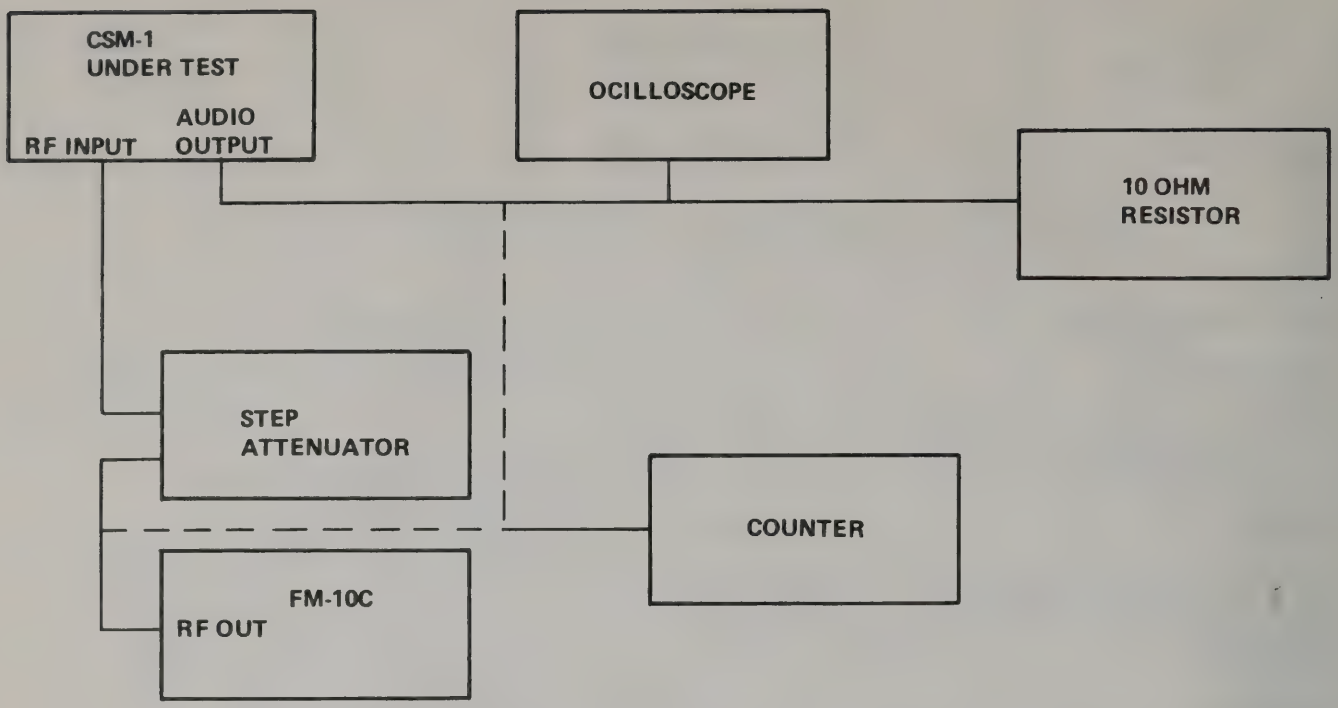

Figure 6-14. Setup for Frequency Measurement Range Accuracy and Resolution Tests

Procedure:

Set up equipment as shown in Figure 6-14.

Set the controls of the CSM-1 under test as follows:

FUNCTION switch:	MEASURE
AMPLITUDE MODULATION switch:	OFF
SWEEP WIDTH control:	OFF
Frequency dials:	118.6532 (Variable "OUT")

Set the FM-10C frequency to 118.6532 (Variable to OUT) with its FUNCTION switch set to GENERATE. Set the RF OUTPUT LEVEL controls to -27 dBm and set the calibrated 10 dB step attenuator to 20 dB, producing an RF level into the CSM-1 under test of 1 mV (-47 dBm).

Record the actual output frequency of the FM-10C. Connect the counter to the CSM-1 audio output and measure the beat frequency. It should be less then 118 Hz + the absolute value of the difference between 118.653200 and the FM-10C measured frequency. Activate the variable 0 to 100 Hz VCO and adjust the CSM-1 frequency until the beat light turns on and off about once per second (1 Hz resolution). The CSM-1 dials should indicate between 118.653323 and 118.653077 MHz. Change the frequency of the CSM-1 by 20 Hz. The oscilloscope display should indicate a peak-to-peak signal greater than 3 V. Change the frequency by an additional 1 kHz, and then by 10 kHz by switching the 1 kHz dial from "3" to "4" and then by switching the 10 kHz dial from "5" to "6" and the 1 kHz dial back to "3". The oscilloscope display should indicate equal to or greater than 3 V peak-to-peak in both cases.

Set the FM-10C and the CSM-1 frequency dials to 0.0500 MHz (both variable dials to OUT). The "beat" frequency should be equal to or less than 0.1 Hz (period greater than 10 sec). Set the two frequency dials to 512.0000 MHz, and measure the "beat" frequency. It should be equal to or less than 1024 Hz, and the audio level should be equal to or greater than 3 V peak-to-peak.

6.7.2 Frequency Measurement Sensitivity and Overload Test

Specifications:

The minimum Frequency Measurement Sensitivity is 2 microvolts. This sensitivity is defined as the minimum level where the Frequency Accuracy, Frequency Measurement Resolution and the Audio level of the beat frequency as given in Test 6.7.1 shall apply.

It shall be possible to feed an RF signal with a Level of 0.5 volts rms (+6 dBm) into the CSM-1 under test without causing damage.

Description:

The level into the CSM-1 under test is increased to +6 dBm (external 10 dB step attenuator to 0, FM-10C output level set to +6.2 dBm), and left there for 10 sec. Then the output level of the FM-10C is decreased to -101 dBm (2 microvolts) and the frequency accuracy and resolution test at 118.6532 MHz as described in Test 6.7.1 repeated.

Equipment:

Same as for Test 6.7.1.

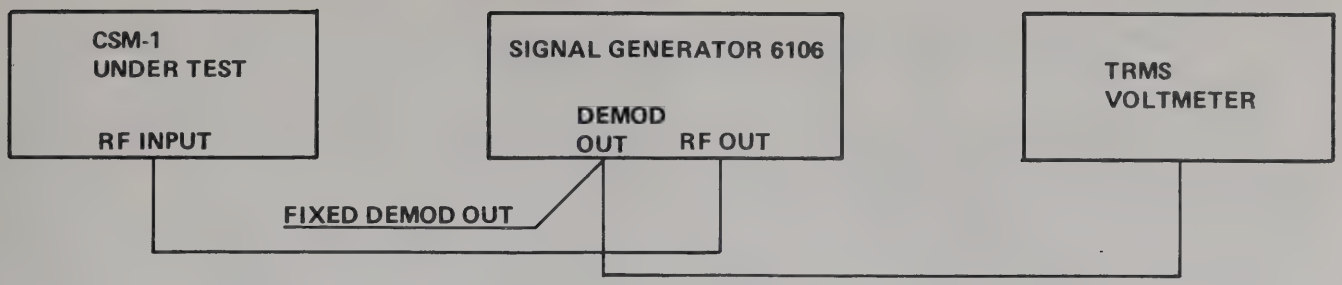

Figure 6-15. Setup for AM Factor Measurement Range and Accuracy Test

Procedure:

Set the FM-10C frequency dials to 118.6532 MHz. Vary the 0 – 100 Variable dial on the CSM-1, adjust the CSM-1 frequency until the beat light indicates a "zero beat" condition. The difference between the CSM-1 dial settings and the actual frequency of the FM-10C should be less than 123 Hz + 0.2 times ΔT in Hertz, where ΔT is the difference between ambient temperature and 25°C in °C.

6.8 AMPLITUDE MODULATION METER MODE TESTS

6.8.1 Amplitude Modulation Factor Measurement Range and Accuracy at 1 kHz

Specifications:

AM Factor measurement range:		0 – 95%
In 2 ranges:	a)	0 – 30%
	b)	0 – 100%
Accuracy of AM Factor measurement:		±8%* of Full Scale
In 0 – 30% Full Scale range accuracy:		±2.4% AM (100% AM x 8% tolerance)
In 0 – 100% Full Scale range accuracy:		±8% AM (100% AM x 8% tolerance)

*8% AM means that the actual amplitude modulation factor of an AM'd RF signal of 50% will be indicated between 42 and 58%.

Description:

An RF Signal Generator with an accurate amplitude modulation (±1%) is used as a calibrated source.

Equipment:

RF Signal Generator:	Singer 6106
True RMS Voltmeter:	Hewlett Packard 3400A

Procedure:

Set-up equipment as shown in Figure 6-15.

FUNCTION switch:	MEASURE, 0.04 to 2 mV
AGC/MANUAL switch:	AGC
SWEEP WIDTH control:	OFF
AMPLITUDE MODULATION switch:	OFF
VERT MODE switch:	VERT SET

Set Model 6106 Signal Generator RF frequency to 335.600 MHz and lock it. Set 6106 output level to 1 mV (-47 dBm). Depress INT AM button, "100%" button, and SWEEP MODE OFF button; release "Vx2" button, and adjust the coarse and fine AM LEVEL controls until the external TRMS voltmeter indicates 0.500 Volts (50.0% AM). Calibrate the CRT of the CSM-1 under test for AM measurement by first setting the vertical reference line, then set the carrier by adjusting the CARRIER SET control and then switching to the "100%AM" position. Set the SWEEP MODE switch to HI, and adjust the sweep rate so that at least 5 periods appear on the CRT. The CRT display should indicate between 42% and 58%. Increase the AM level on the 6106 to 95%, (0.95 V indicated on the external meter) and measure again. It should indicate between 87% and greater than 100%. Decrease the AM level on the 6106 to 25% (0.25 V indicated on the external meter). Switch the CSM-1 VERT MODE switch to "30%". The CRT should indicate between 22.6% and 27.4%.

6.8.2 Test of Modulation Frequency Range of AM Factor Measurement

Specifications:

Modulation Frequency Range* For AM Factor Measurement:	50 Hz to 3 kHz

*Modulation Frequency range is defined as the frequency range in which the AM Factor Measurement accuracy stays within ±8% of full scale.

Description:

The RF Signal Generator used in Test 6.8.1 is amplitude modulated with an external audio generator at 50 Hz, 1 kHz and 3 kHz and used as a calibrated source the same way as in Test 6.8.1.

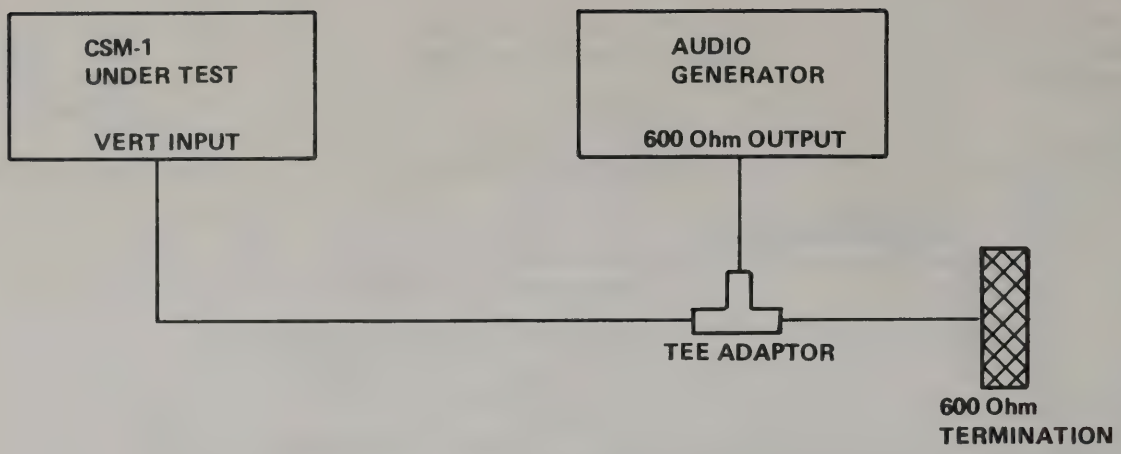

Figure 6-16. Setup for Oscilloscope Mode Tests

Equipment:

RF Signal Generator:	Singer Model 6106
True RMS Voltmeter:	Hewlett Packard Model 3400A
Audio Generator:	Hewlett Packard Model 651B

Procedure:

Use the same setup as shown in Figure 6-15 except connect the Audio Generator to the AM IN BNC connector of the 6106 and set the level of the Audio Generator to 2.0 V rms. Set the modulation frequency to 50 Hz, and adjust the AM LEVEL controls on the 6106 for 25% AM (TRMS voltmeter indication 0.25 V rms). The CRT should indicate between 22.6% and 27.4%. Change the modulation frequency to 1 kHz and 3 kHz and observe at each frequency the CRT indication. It should remain in the 22.6% to 27.4% range.

6.9 OSCILLOSCOPE MODE TESTS

6.9.1 Vertical Frequency Response, Vertical Sensitivity, Sweep Rate Range, and Synchronization Test

Specifications:

Vertical 3 dB bandwidth:	50 Hz to 30 kHz
Vertical Sensitivity (at maximum vertical gain):	300 mV peak-to-peak ±10% for full scale deflection.
Sweep Rate (two ranges)	
a) Low range (Marked LO):	Between less than 4.46 msec and greater than 20 msec (equivalent to between greater than 224 Hz and less than 50 Hz)
b) High range (marked HI):	Between less than 200 usec and greater than 4.46 msec (equivalent to between greater than 500 Hz and less than 224 Hz)
Type of synchronization:	Internal, automatic

Description:

A sinusoidal audio generator with known frequency and known amplitude is used as a calibration source for measuring the vertical display bandwidth, vertical sensitivity and sweep rate range.

Equipment:

Audio Generator:	Hewlett Packard Model 651B
600 Ohm	Singer 603002

Procedure:

Set up equipment as shown in Figure 6-16.

Set the CSM-1 controls as follows:

VERT MODE switch:	EXTERNAL
SWEEP MODE switch:	HI
EXT VERT GAIN Control:	Fully clockwise

With no signal into the vertical input, center the CRT trace on the center horizontal line by adjusting the VERT POS, HORIZ GAIN, and HORIZ POS controls. Connect the audio generator, set the frequency to 1 kHz, and adjust the level until the displayed amplitude exactly touches the top and bottom lines of the display graticule. The audio generator output voltage should be between 96 mV rms and 117 mV rms.

Vary the frequency from 50 Hz to 30 kHz. The response should be flat (typically less than ±1 dB at 50 Hz and 30 kHz) and not decrease below the 70% line as marked on the right hand side of the graticule. Observe the internal automatic synchronizing of the display. The triggering should occur always within the first quadrant of the leading

sinusoid (typically around 60° of the first period). Decrease the display amplitude to 20% of Full Scale; synchronizing should be maintained down to 20% of full scale. Set the Audio Generator frequency to 250 Hz. Set the SWEEP MODE switch to LO and the SWEEP RATE switch fully CCW. There should be at least 5 cycles of the 250 Hz sinusoid displayed on the CRT screen. Set the Audio Generator to 25 kHz. Set the Sweep Mode switch to HI and the Sweep Rate switch fully CW. There should be not more than 5 cycles of the 25 kHz sinusoid displayed on the CRT screen.

6.9.2 External Horizontal Input Sensitivity Test

Specifications:

External horizontal sensitivity:	Less than 0.5 V peak-to-peak input voltage for a deflection of one inch.

Description:

With no vertical input, a sinusoidul signal is connected to the horizontal input and the amplitude adjusted until the width of the horizontal line is equal to the width of the graticule (10 Divisions = 2.3 inches).

Equipment:

Audio Generator:	Hewlett Packard Model 651B
600 Ohm Termination:	Singer 603002

Procedure:

The setup is the same as for Test 6.9.1, except that the Audio Generator is connected to the horizontal input.

Set the CSM-1 controls as follows:

SWEEP MODE switch:	EXT HORIZ
HORIZ GAIN control:	Fully Clock-wise
HORIZ POS control:	About 12 o'clock

Set the Audio Generator frequency to 1 kHz and adjust its output voltage until the width of the horizontal line is exactly 10 Divisions. The voltage indicated on the Audio Generator should be less than 0.41V rms.

6.10 NOISE FLOOR LEVEL TEST

Specification:

The average noise floor level, when operated in the signal generator mode, shall be a minimum of 65 dB below the carrier in a 30 kHz bandwidth at a frequency of 200 kHz from the carrier, as measured using a spectrum analyzer with a 100 Hz video filter inserted. The noise floor of the spectrum analyzer shall be a minimum of 70 dB below the carrier.

Description:

A spectrum analyzer is used to measure the noise level close to the carrier.

Procedure:

Leave equipment connected as shown in Fig. 2.5.1, and CSM-1 and spectrum analyzer controls set as described in Para 2.5 before. Set CSM-1 frequency dials to 500.0000 OUT. On the spectrum analyzer, set the dispersion to 200 kHz/DIV., video filter to 100 Hz, and scan time to 50 msec/DIV. Adjust brightness and persistence for a convenient display. Tune the frequency controls on the spectrum analyzer until the carrier appears exactly at the center of the display. Adjust the reference level vernier so that the carrier peak is at top graticule line (LOG REF line) of the display.

The spectrum analyzer indication, one division to the left and one division to the right of the carrier (±200 kHz) disregarding the filter response of the spectrum analyzer should be at least 6.5 divisions below the top graticule line (at least 65 dB below the carrier). The spectrum analyzer filter response is eliminated by drawing a connecting line between the noise level just before the start of the filter response (about -220 kHz or 1.1 divisions to the left of the carrier) to the noise level just after the filter response disappears (about +240 kHz from the carrier or 1.2 divisions to the right of the carrier).

Repeat at 330.1500 MHz, and 128.2000 MHz.

Section VII

MAINTENANCE

7.1 INTRODUCTION

The Maintenance Section describes the adjustments required to return the Model CSM-1 Communication Service Monitor to peak operating condition when either the performance of the CSM-1 indicates an out-of-spec condition, or after a repair was necessary.

7.2 SAFETY CONSIDERATIONS

Although the CSM-1 has been designed in accordance with international safety standards, this manual contains information and warnings which must be followed to insure safe operation and to retain the instrument in a safe condition. Service and adjustments should be performed only by qualified service personnel.

WARNING

Any interruption of the protective (grounding) conductor inside or outside the instrument or disconnection of the protective earth terminal is likely to make the apparatus dangerous. Intentional interruption is prohibited.

Any adjustment, maintenance, and repair of the opened instrument under voltage should be avoided as much as possible and, when inevitable, should be carried out only by a skilled person who is aware of the hazard involved. The opening of covers or removal of parts, except those to which access can be gained by hand, may expose live parts, and also accessible terminals may be live. **Voltages as high as 1000 volts are present in circuitry associated with the CRT.**

Capacitors inside the instrument may still be charged even if the instrument has been disconnected from its source of supply.

Make sure that only fuses with the required rated current and of the specified slow blow are used for replacement.

The use of repaired fuses and short-circuiting of fuseholders must be avoided.

Whenever it is likely that the protection has been impaired, the instrument must be made inoperative and be secured against any unintended operation.

7.3 TEST EQUIPMENT REQUIRED

Table 6-1 contains a list of test equipment and test accessories required in the adjustment procedures. In addition, the table contains the required minimum specifications and a suggested manufacturer's model number.

7.4 SYNTHESIZER FOLDOUT

The measure portion of the Model CSM-1 is contained on the A6 deck which is located on the top of the chassis (see Figure 7-1). The controls on the A6 deck are easily accessible (see Figure 7-7).

The synthesizer portion of the Model CSM-1 is contained on 4 decks which are sandwiched together: the A2, A3, A4, and A5 deck.

The following procedure describes the opening of the synthesizer portion to gain access to the controls and connectors located on the A2, A3, A4, and A5 deck.

a. Remove the Model CSM-1 cover by unscrewing four screws on the back panel. Slide the cover out. Turn the Model CSM-1 upside down.

b. Push the lower retaining button on the right hand side of the chassis in, and pull synthesizer assembly up using finger pull at rear. It will pivot on the two upper retaining buttons on the left and right hand side of the chassis. Lift up until the two other retaining buttons snap in place (this happens when the synthesizer assembly is straight up as shown in Figure 7-2). The two exposed decks are the A5 deck in front, see Figure 7-2, and the A2 deck in the back, see Figure 7-3. This foldout provides access to the adjustments located on the PC boards on the A2 and A5 deck.

c. To gain access to the adjustments on the A3 and A4 deck, unscrew the two outside captive screws on top of the A2 assembly. These screws are shown in Figure 7-3. They hold the A2/A3 deck pair and the A4/A5 deck pair together. With these two screws unscrewed, the two deck pairs will hinge apart, and the A2/A3 deck will fold back and can be laid on the back panel assembly (see Figure 7-4). This will expose the A3 deck (horizontal) and A4 deck (vertical).

d. To get to the PC board controls located in the A4 deck more conveniently, and at the same time gain access to the front panel controls and the connectors located on the tips of the A2, A3, A4 and A5 decks, push in the two front retaining buttons on the side of the chassis (see Figure 7-4). The entire synthesizer assembly will now hinge around the two back retaining buttons and can be laid on top of the back panel assembly (see Figure 7-5). The A4/A5 deck assembly can now be folded out by unscrewing the two outer captive screws on top of the A5 deck. The A4/A5 deck pair can then be hinged forward until it lies horizontally on top of the front panel assembly (see Figure 7-6). Use protective material to avoid damaging the finish on the top of the front panel.

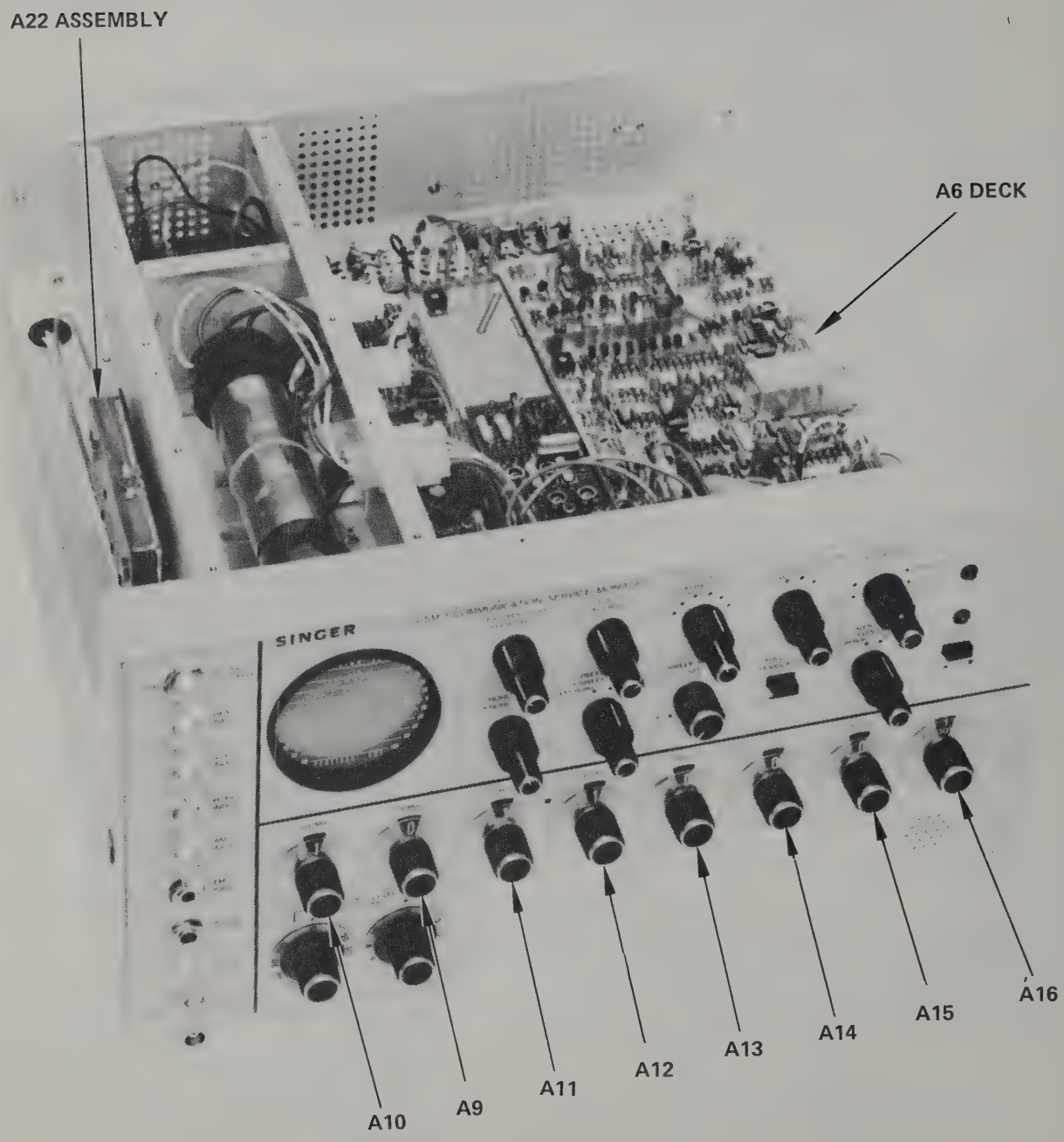

Figure 7-1. Assembly Location, Model CSM-1 Isometric View, Cover Removed

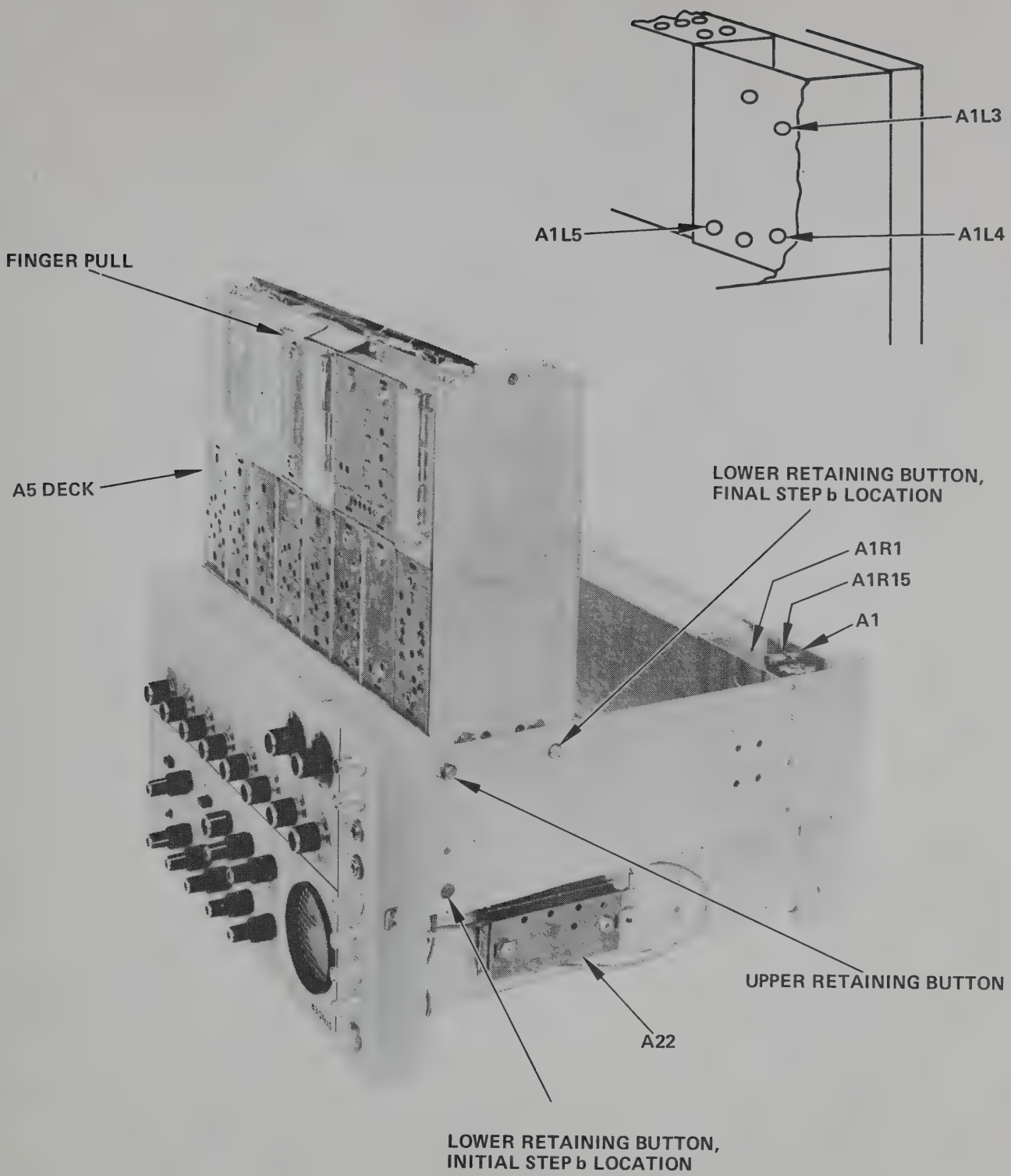

Figure 7-2. Synthesizer Foldout, Step b, Front View

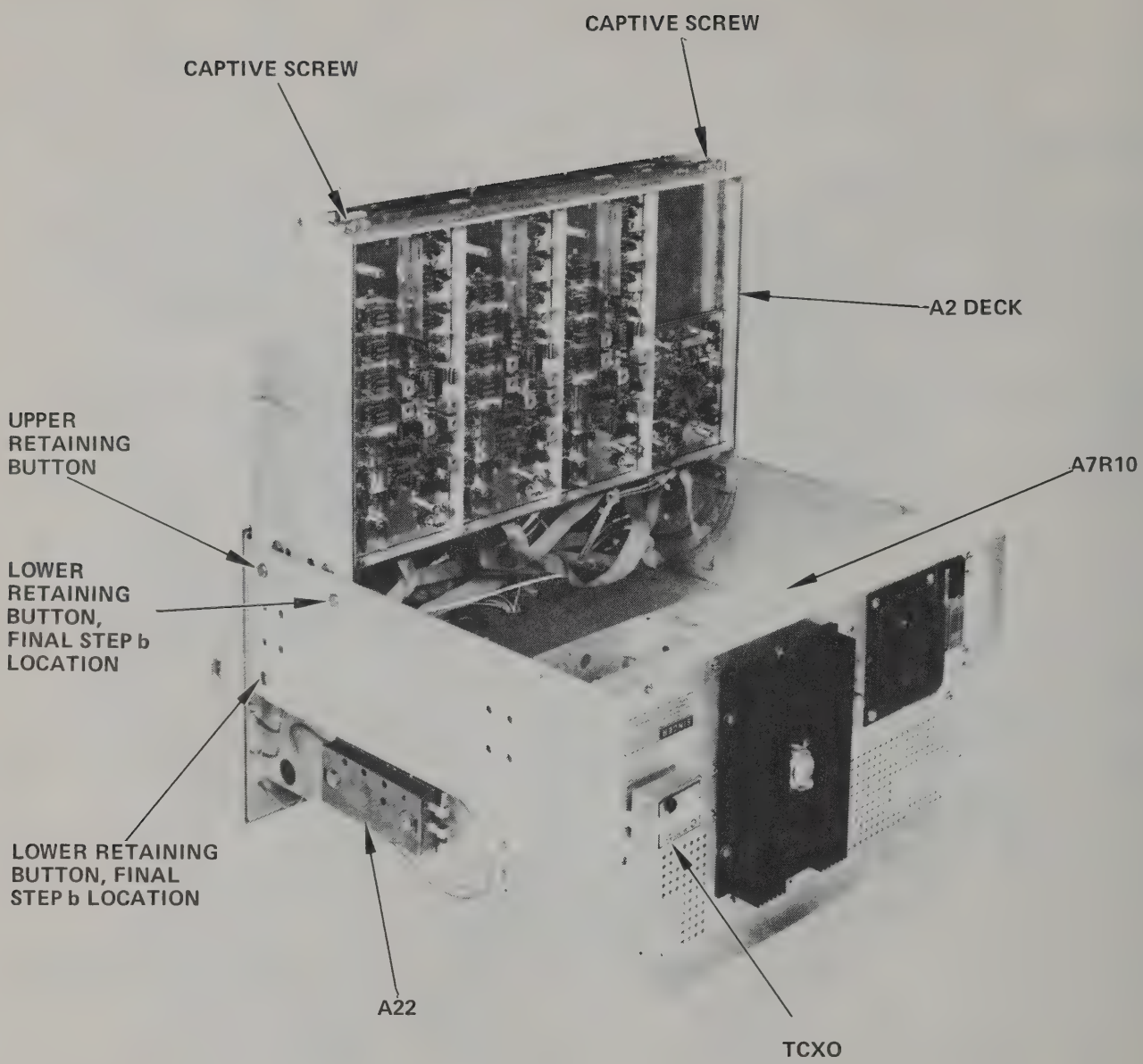

Figure 7-3. Synthesizer Foldout, Step b, Rear View

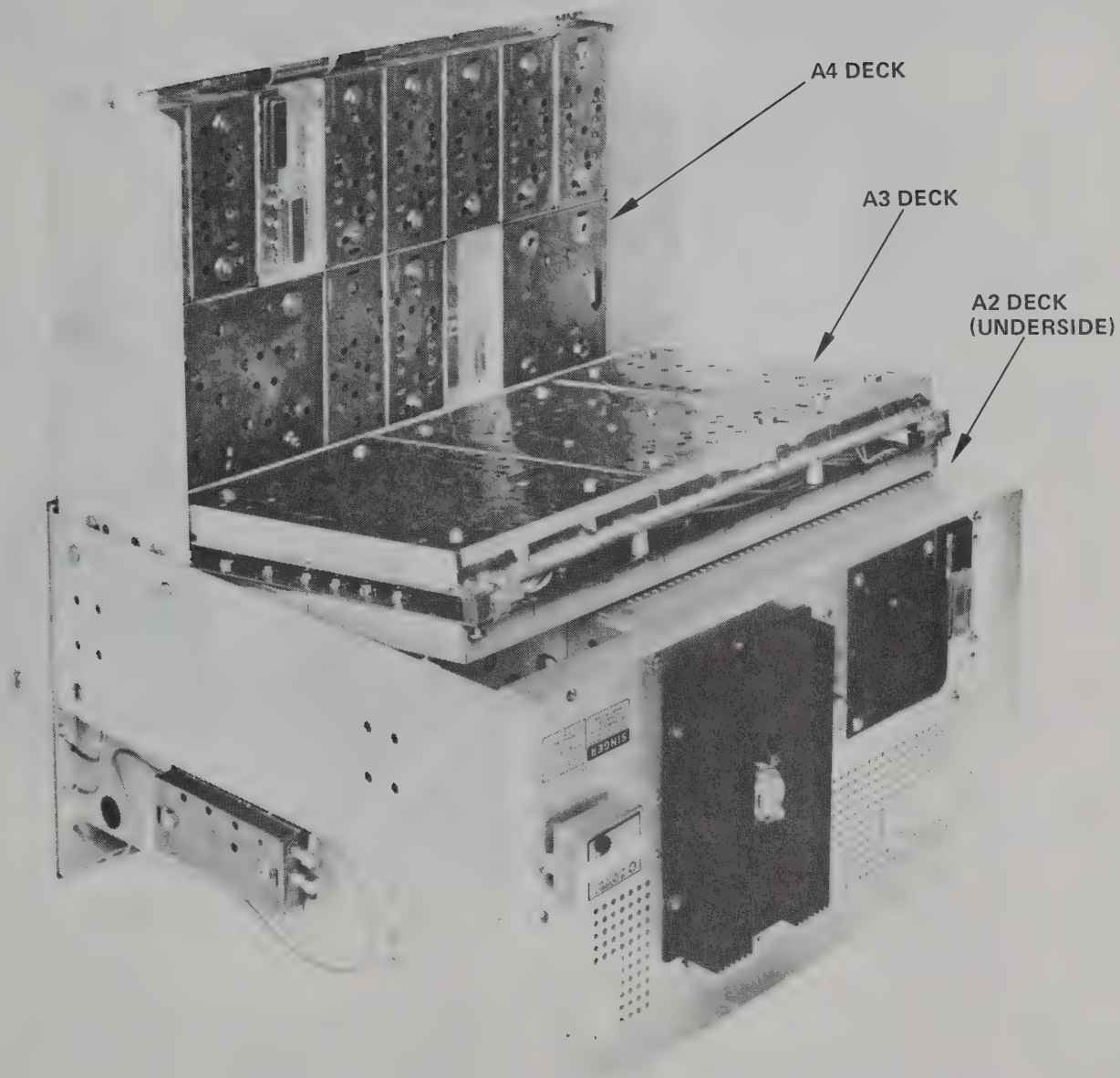

Figure 7-4. Synthesizer Foldout, Step c, A2/A3 Deck Separation

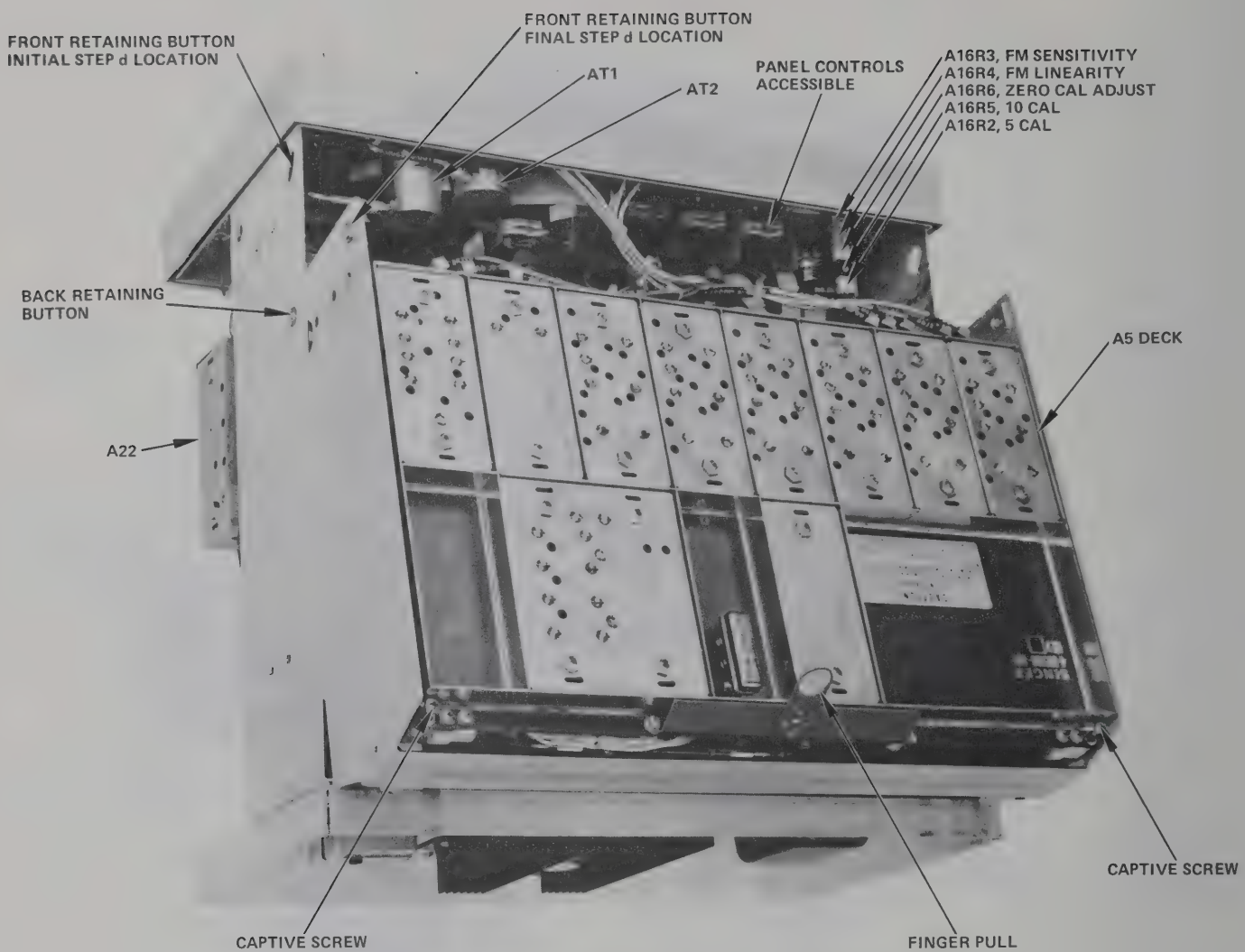

Figure 7-5. Synthesizer Foldout, Step d, Re-Positioning of 4 Decks

7.5 INTRODUCTION TO ADJUSTMENTS

7.5.1 General

Since the Model CSM-1 has many adjustments, it is imperative to read this adjustment procedure before attempting to reset any adjustment.

If any function of the CSM-1 does not perform properly, consult this adjustment procedure first, since the malfunction in most cases can be traced to a misadjustment rather than an outright failure. Considering the many adjustments, this adjustment procedure also serves as an excellent trouble shooting guide: if a malfunction is traced to the proper adjustment and if the moving of the adjustment over its complete range does not eliminate the malfunction, in most cases a failure has occurred in the circuitry around this particular adjustment and the failure can be found readily.

7.5.2 PC Board Covers

All PC boards on the A3, A4, and A5 deck have covers. Due to the high frequencies involved, these covers influence the spur levels, leakage, tuning characteristics, gain, etc. of the circuits on the PC boards, and therefore are critical components of the synthesizer. Covers should not be disturbed any more than absolutely necessary; modules should preferably be replaced complete with cover in place by unscrewing the Phillipshead mounting screws, particularly where the covers are soldered in place.

NOTE

When removing or replacing any PC board module, do not attempt to fully loosen or tighten any one screw over its full range in one operation. All mounting screws should be turned in sequence, one or two turns at a time, to avoid binding and structural distortion.

7.5.3 Types of Adjustments

The adjustments in the Model CSM-1 are divided into 3 groups:

a. Primary Adjustments

These are the adjustments which might have to be used at the regular calibration intervals, such as 'power supply voltage adjust, power output level adjust for the GENERATE mode, frequency adjustment of the TCXO and the Variable Frequency Oscillator, etc.

b. Secondary Adjustments

These are adjustments which are used after a malfunction (out-of-spec condition) has been determined and the Model CSM-1 is being serviced to eliminate this out-of-spec performance. Typically these are level adjustments and tuning adjustments of single tuned amplifiers or multipliers in the synthesizer section to reduce spurious levels, gain and offset adjustments to readjust the sensitivity and level range of the receiving section of the Model CSM-1 for AM and frequency measurements, etc.

NOTE

Refer to Appendix B for detailed spur analysis and spur reduction procedures.

c. Tertiary Adjustments

These are adjustments made necessary due to the tolerances of components such as resistors, capacitors or inductors; they are used to avoid selected components. They should only be adjusted in conjunction with a detailed test procedure of the PC board on which this adjustment is mounted. In most cases, such a test procedure requires removal of the PC board from the Model CSM-1 and insertion in a special test fixture which simulates the electrical environment in which the PC board has to operate. These test procedures and the description of the test fixtures are not provided in this Maintenance Manual. Therefore, contact the factory before attempting any of these adjustments.

7.6 PRIMARY ADJUSTMENTS

7.6.1 DC Power Supply Adjustment

Refer to Figure 9-33, power supply schematic, A7.

Description:

A digital DC voltmeter is used to check the +9V power supply voltage. Although +9V, -9V, +5V, +250V, and -900V supply voltages are provided, only the +9V is adjustable.

This +9V voltage is then adjusted for the correct value. This procedure should be performed before making any other adjustment.

Equipment:

Digital Voltmeter	Fluke 8000A

Procedure:

a. Remove Model CSM-1 cover and turn the instrument on its left side, using two spacers to support the front panel frame. Push POWER push button to ON. Connect the negative lead of the DVM to any chassis ground and the positive lead to one of the 3 terminals with red wires behind the A6 board (see Figure 7-7).

The dc voltage should measure +9.0V ±90mV. If not, insert a 6" long insulated screwdriver through the hole in the chassis marked A7R10 (see Figure 7-3), and adjust A7R10 for a reading within ±10mV

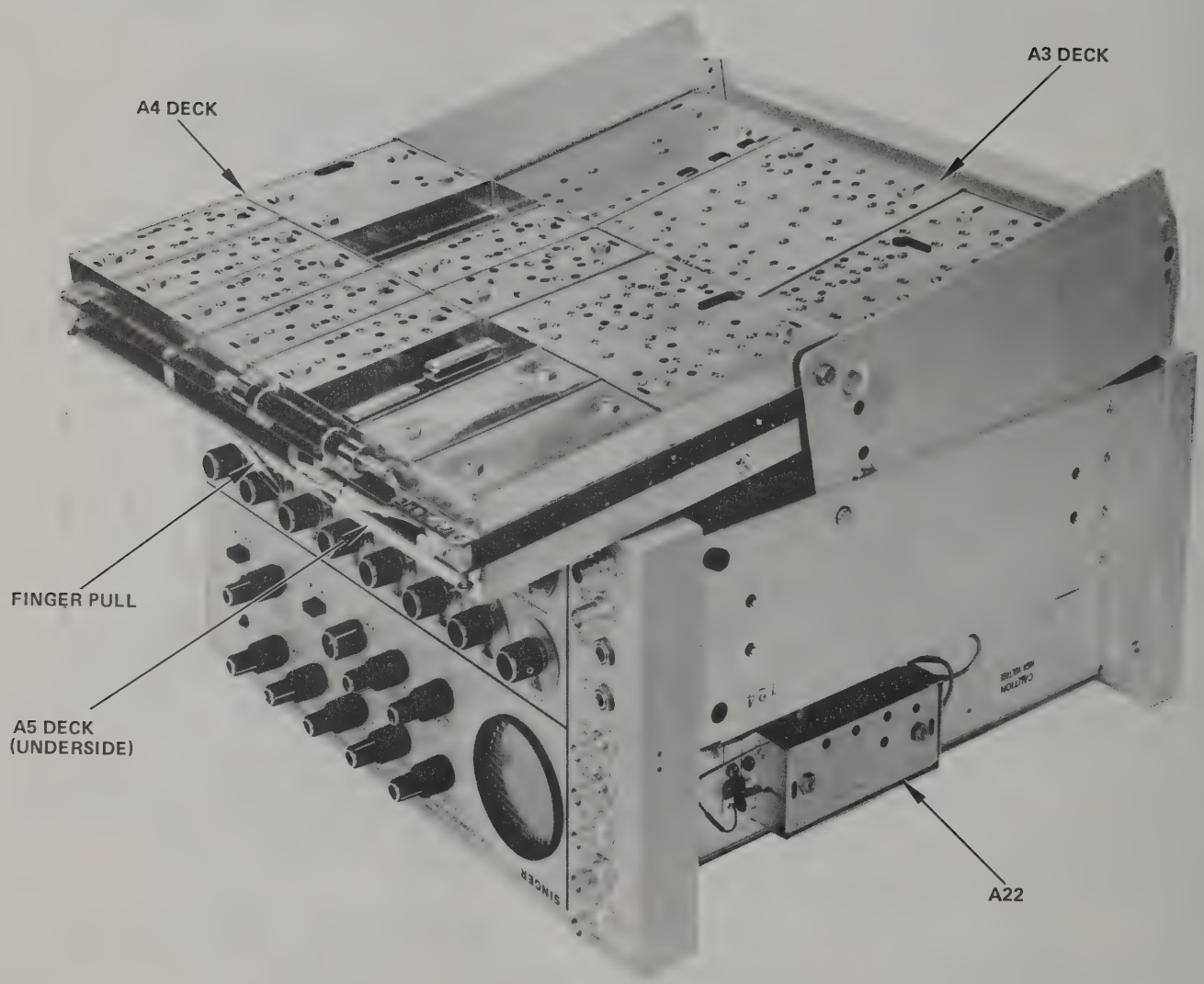

Figure 7-6. Synthesizer Foldout, Step d, A4/A5 Deck Separation

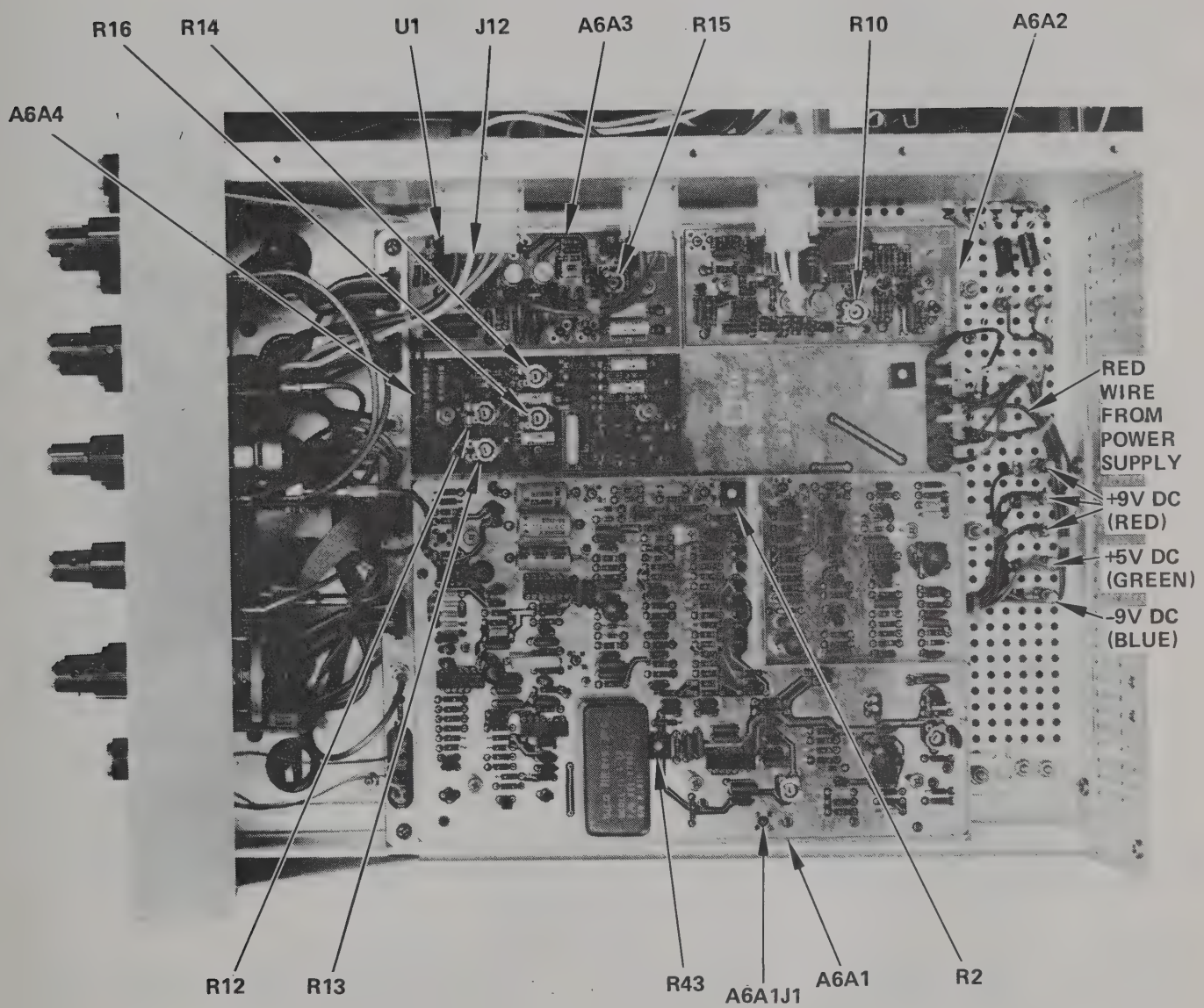

Figure 7-7. Adjustment Control Location, A6 Deck

NOTE

The A7R10 adjustment hole, which is normally closed with a button plug, also provides access to A7R3 (Current Limit Set). Relative locations of A7R10 and A7R3 are indicated by chassis stampings. Avoid disturbing A7R3 – refer to paragraph 7.7.5.2 should adjustment be required.

b. Connect the positive lead of the DVM to the terminal with the green wires (see Figure 7-7). The dc voltage should read +5V ±0.5V. There is no adjustment (refer to paragraph f).

c. Connect the positive lead of the DVM to the terminal with the yellow wires (see Figure 7-7) dc voltage should read +250V ±25V. There is no adjustment (refer to Paragraph f).

d. Connect the positive lead of the DVM to the terminal with the blue wires. The dc voltage should read -9.0V ±0.9V. There is no adjustment (refer to paragraph f).

e. The -900V normally is not checked if a green trace with normal brightness appears on the oscilloscope.

f. The -900V, +250V, -9V are produced by the high voltage supply A8. If any of these voltages are not within their limits, troubleshoot the high voltage supply. The +5V is produced by an IC regulator (A7U1). The accuracy of the +5V supply is ±5%, determined internally in A7U1. If the voltage is outside these limits with normal loading, replace A7U1. To check if the loading is normal, turn the Model CSM-1 off and measure the resistance to chassis on the +5V line: this should be approximately 600 ohms.

7.6.2 Frequency Adjustment of TCXO

Refer to Figure 9-1, 10 MHz Buffer Amplifier schematic, A1. Refer to Figure 3-1, for view of TCXO.

Description:

The Model CSM-1 output frequency is set to 10.0000 MHz and measured with a frequency counter. The TCXO frequency is then adjusted in a cold state (immediately after turn on) until the counter readout shows 10.00 MHz plus or minus the offset frequency shown on the TCXO name plate.

Equipment:

Counter	Dana Model 8130*

*calibrated for a frequency accuracy of $\pm 1 \times 10^{-7}$.

Procedure:

a. The Model CSM-1 must be turned off and remain in a 25°C ambient for at least 2 hours. Connect an rf cable from the RF OUTPUT connector of the Model CSM-1 to Input C of the counter.

b. Push Frequency C button under Function on counter, and push the 1 sec button under Measurement Time.

c. Set the RF OUTPUT LEVEL on the Model CSM-1 to 0 dBm, push the GENERATE button (AM button released, SWEEP WIDTH at OFF), and set the frequency dials to 010.0000 OUT MHz.

d. Remove protective cap screw on TCXO cover. Observe small slotted-head frequency adjustment trimmer behind the protective cap screw. Note the frequency offset printed on the nameplate on the TCXO case.

e. Turn the Model CSM-1 on and quickly (within 60 sec) adjust trimmer for 10.00 MHz ± the offset indicated on the TCXO housing.

f. Replace the protective cap screw on the TCXO.

7.6.3 RF Output Power Level Adjustment (Model CSM-1 in the GENERATE mode)

Refer to Figure 9-27, Final BBA schematic, A5A10.

Description:

Connect an RF voltmeter with a 50 Ω input impedance to the Model CSM-1 RF OUTPUT connector, adjust the RF output level to -20 dBm at 250 MHz with the 1 dB step attenuator set to 0 and the 20 dB step attenuator set to 10.

Equipment:

RF voltmeter	Boonton Model 92BD
RF probe	Boonton Model 91-12F
T adapter	Boonton Model 11-14A
50 ohm termination	Boonton Model 91-15A

Procedure:

a. The T adapter is connected directly to the RF OUTPUT of the Model CSM-1 with the 50Ω termination attached to one side of the adapter and the RF probe to the other.

b. The power level should be -20 dBm ±1 dB. If not, adjust R39 located on PC board A5A10 (see Figure 7-8) for this level.

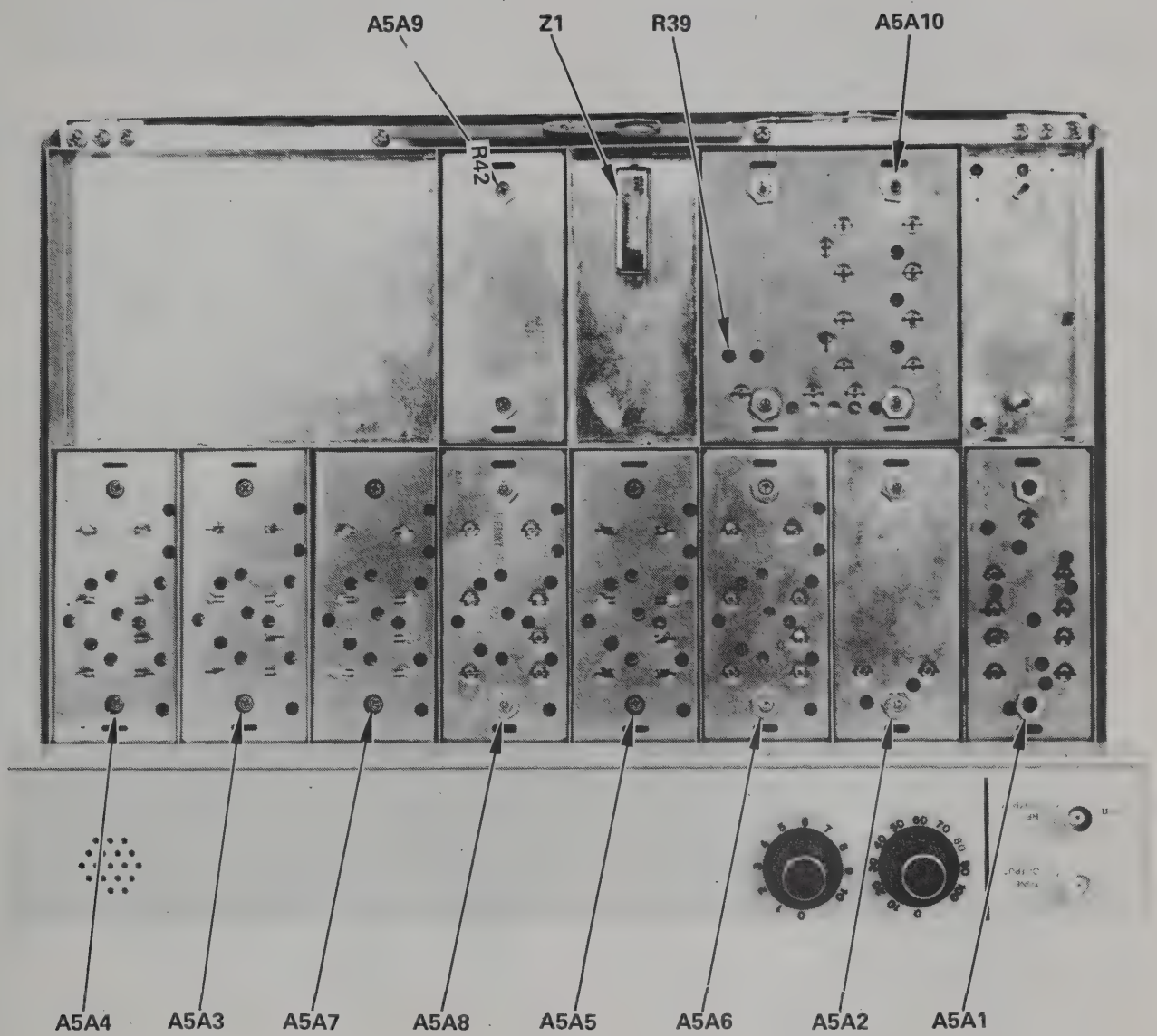

Figure 7-8. Adjustment Control Location, A5 Deck

7.6.4 Gain Adjustment of Model CSM-1 Used As Amplitude Modulation Meter

Refer to:

a. Figure 5-8, Block Diagram of Circuit Measure Assembly, A6.

b. Figure 9-28, Measure IF/AF Schematic, A6A1.

Description:

The Model CSM-1 is set up as a receiver-type amplitude modulation meter by setting the FUNCTION switch to MEASURE, 2 to 60 μV sensitivity, and the AGC/MANUAL switch to AGC. An RF Signal from a calibrated signal generator, with the output level set at -107 dBm (1 μV), is fed into the MEASURE input of the Model CSM-1 operated with the AGC. The IF GAIN control A6A1R43 is adjusted so that the carrier level produces the nominal CRT indication (top line of CRT) with the CARRIER SET control at maximum. The RF signal generator level is then varied 6 dB (-101 dBm) and the CARRIER SET control at maximum. The RF signal generator level is then varied 6 dB (-101 dBm) and the CARRIER SET control adjusted for a CRT trace on the top line of the CRT display. The RF signal level is increased in three 10 dB steps to -71 dBm (60 μV) and the AGC action checked (carrier level should stay on top line). The sensitivity is switched to the 0.06 to 2 mV range and the internal 30 dB attenuator adjusted to produce proper AGC action for the 0.06 to 2 mV input level range.

Equipment:

RF Signal Generator Singer Model 6201

Procedure:

a. Remove the Model CSM-1 cover.

b. Decrease the Signal Generator output level to -107 dBm (1 μV) and push the CW button. Adjust the RF frequency to 100.000 MHz and lock it. Connect the Signal Generator RF Output to the Model CSM-1 RF INPUT connector.

c. Set the Model CSM-1 controls as follows:

FUNCTION switch: MEASURE, 2 to 60 μV

AGC/MANUAL switch: AGC

AMPLITUDE MODULATION push button OFF (released)

FREQUENCY DIALS: 100.0000 MHz

SWEEP WIDTH control: OFF

VERT MODE switch: VERT SET

d. Adjust VERT POS control until the CRT trace, a horizontal line, is placed at VERTICAL SET position (bottom of CRT). Turn VERT MODE switch to CARR SET and set CARRIER LEVEL control to maximum.

e. Adjust A6A1 R43 potentiometer (see Figure 7-7) until the CRT trace lines up with CARRIER SET position (top line of CRT).

f. Increase the RF level of the Model 6201 Signal Generator to -101 dBm (2 μV). Adjust the CARR SET control until CRT trace lines up with the top line again. Increase RF signal generator level in three 10 dB steps to 60 μV (-71 dBm). The CRT display (horizontal line) should remain within ±1 division of the CARRIER SET position.

g. Switch the FUNCTION switch to MEASURE .06 to 2 mV. Decrease the RF signal generator output level to 30 μV (-77 dBm), set the CARRIER LEVEL control to maximum, and adjust A6A1 R_2 (30 dB attenuator adjust) until the CRT trace lines up with the CARRIER SET position (top line of CRT).

h. Increase the RF Signal Generator output level to 60 μV (-71 dBm), and adjust the CARRIER LEVEL Control until the CRT trace lines up again with the top line of the CRT. Then increase the RF signal generator output level in three 10 dB steps to -41 dBm and check the CRT trace position. It should stay within ±1 division of the CARRIER SET position.

7.6.5 VCO Adjustment

Refer to Figure 9-39, 0-100 Hz POT schematic, A16, and figure 7-5 for adjustment locations.

Description:

An RF Signal Generator with frequency lock capability and a 6 digit digital frequency readout is connected as a reference source to the MEASURE INPUT connector and a beat obtained with the VCO switched out. The VCO is then switched into the 10 kHz decade and the VCO dial set to the "0" division. The VCO "0" CAL adjustment is varied until the beat light flickers with a rate of <10 beats/sec (±0.1% accuracy). The frequency of the reference generator is changed upwards exactly 100.0 kHz, and the "10" CAL adjustment potentiometer is then set until a beat frequency of <10 beats/sec is again obtained. Since the two controls interact slightly, this procedure is repeated several times.

After the "0" and "10" CAL adjustments are set properly, the accuracy of the VCO frequency versus the dial calibration is checked. If the non-linearity is more than 5% (0.5 major divisions), the VCO frequency versus dial relationship is linearized by adjusting the linearity control marked "5" CAL ADJ. This is done by setting the frequency to 50.0 kHz above the original reference frequency and setting the VCO dial to exactly the "5" division, and adjusting the "5" CAL potentiometer until a beat frequency of less than 10 beats/sec is again obtained.

Equipment:

RF Signal Generator Singer Model 6201

Procedure:

a. Set RF Signal Generator Model 6201 to 8.50000 MHz and lock it. Push the CW button and release VX2 button. Set the output level controls for -47 dBm (1 mV). Connect the Signal Generator RF Output to the Model CSM-1 RF INPUT.

b. Set the Model CSM-1 controls as follows:

FUNCTION switch to MEASURE: .06-2 mV

SWEEP WIDTH control: OFF

AMPLITUDE MODULATION pushbutton release (OFF)

FREQUENCY DIALS: 008.5000 OUT

c. Turn the Model CSM-1 on its side and remove the cover. Fold synthesizer portion out and back (see Figure 7-5). The A16PC board is the board to which the 0-100 Hz variable control is connected (right lower corner of Model CSM-1 front panel, see Figure 7-1).

d. Turn the Model CSM-1 on. The beat light should flicker less than 10 times/sec. If it is more, unlock the RF Signal Generator frequency and fine adjust for 1 beat/sec.

e. Switch the VCO in by turning the 0-100 Hz dial clockwise. Check the mechanical position of the dial: at the point of switch turn on, the dial indicator should line up with the first calibration marking on the dial (two divisions below 0). If not within ±1/32 inch, loosen knob setscrews and reset accordingly. Switch the 10 kHz decade frequency switch to "V" and set the "0-100 Hz" dial exactly to "0." Adjust A16R6 until beat light flickers less than 5 times/sec.

f. Switch the 10 kHz decade frequency switch back to "0", the 100 kHz decade frequency switch to "6", and readjust the RF Signal Generator frequency to a beat frequency of less than 5 beats/sec.

g. Switch the 10 kHz decade frequency switch to "V", and set the "0-100 Hz" dial exactly to "10". Adjust A16R5 until beat frequency is again less than 5 beats/sec.

h. Since the two frequency adjustments A16R6 and A16R5 interact with each other, repeat steps e thru g several times until the frequency accuracies at the "0" and "10" position is within ±20 Hz.

i. Set the RF Signal Generator frequency to 8.55000 MHz and adjust the "0-100 Hz" dial until the beat light flickers less than 5 beats/sec. The dial setting should be between the 4.5 and 5.5 major division. If not, adjust A16R2 (with the "0-100 Hz" dial set exactly to "5"), until the beat frequency is less than 5 beats/sec.

7.6.6 FM Sensitivity and FM Linearity Adjustment

Refer to Figure 9-39, 0-100 Hz POT schematic, A16.

Description:

An FM meter is used to measure the peak deviation of the frequency modulated RF Output signal of the Model CSM-1 (operated in the GENERATE mode) with a sinusoidal frequency modulating signal applied to the FM input having a level of 100 mV rms. If the peak deviation is outside of the 9 to 11 kHz peak deviation range, a voltage divider on the A16 PC board of the Model CSM-1 is adjusted to set the peak deviation to 10 kHz.

Equipment:

1 Audio Generator	Hewlett-Packard Model 651B
1 FM Modulation meter	Radiometer Model AFM-2

Procedure:

a. Connect the Audio Generator 600 Ω output to the FM input on the Model CSM-1. Since the Model CSM-1 FM input impedance is 600 Ω the output voltage indicated on the Audio Generator meter is equal to the input voltage at the FM input connector. Set the Audio Generator voltage to 0.1 V rms, and the audio frequency to 1 kHz.

b. Set the CSM-1 controls as follows:

Frequency switches: 125.V0005 (the 5 means the "0-100 Hz" dial is at the major division 5).

FUNCTION switch: GENERATE

AMPLITUDE MODULATION push button: Released (off)

SWEEP WIDTH control: OFF

OUTPUT LEVEL switches: 0 dBm.

c. Set the Modulation Meter controls as follows:

Frequency adjustment: 127 MHz

RF input attenuators: 10 dB

IF BANDWIDTH switch: ±400 kHz

METER switch: FAST

MAN/AUTO switch: MAN.

LEVEL control: 2

FUNCTION switch: LEVEL

FILTER switch: 3 kHz

METER RANGE switch: 30 kHz

d. Fine tune the TUNING adjustment on the Modulation Meter until meter deflection peaks. Switch MAN/AUTO switch to AUTO and set LEVEL control to 6. Check that meter indication is at LEVEL point. Switch function switch clockwise to IF CHECK and fine tune TUNING control until meter indication is at IF CHECK. Switch function switch to +FM. If the indication is not between 9 and 11 kHz, adjust A16R3 (see Figure 7-5) until meter indicates 10.0 kHz (switch to 10 kHz range for more resolution).

e. Switch METER RANGE back to 30 kHz. Move the "0-100 Hz" dial slowly from 5 to 0, then from 0 to 10. The Modulation Meter indication should remain between 9 kHz and 11 kHz. If it moves outside of this range, adjust A16R4 (FM linearity adjustment see Figure 7-5) until the FM indication remains constant (within 9 to 11 kHz) when moving the "0-100" Hz dial from 0 to 10 major divisions (when making the adjustment, move the A16R4 adjustment in small steps of about 10 degrees and keep checking over the 0 to 10 range in the "0-100 Hz" dial).

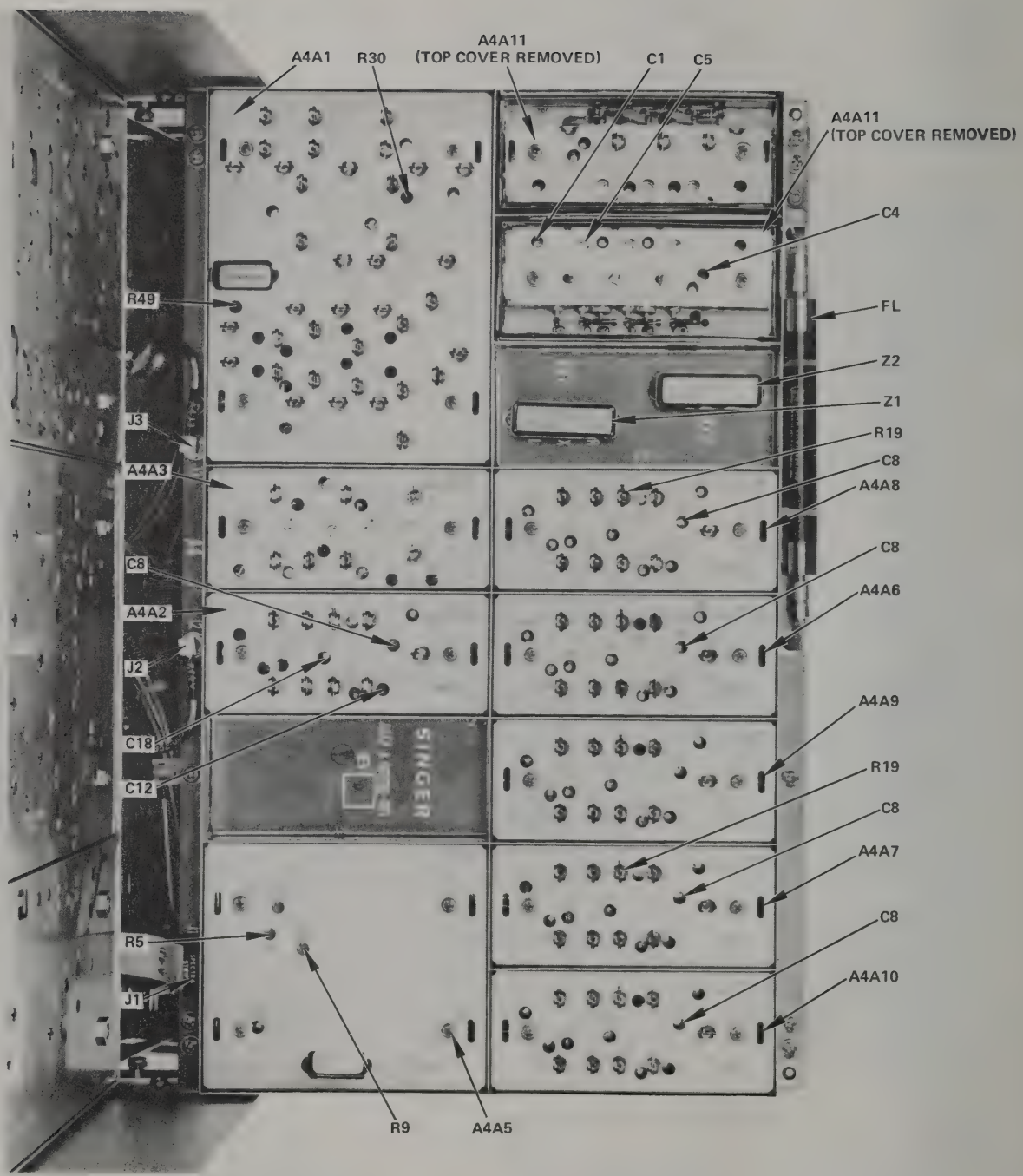

Figure 7-9. Adjustment Control Location, A4 Deck (A4A2, 6, 7, 8, & 10 are alike)

7.6.7 AM Accuracy and EXT AM Sensitivity Adjustments

Refer to Figure 9-11, AM Modulator and Diode Switch Schematic, A4A5.

Description:

An external audio voltage from an audio generator is adjusted to amplitude modulate the RF signal of the Model CSM-1 exactly 30% as indicated on an external Amplitude Modulation Meter connected to the RF OUTPUT of the Model CSM-1. If the Amplitude Modulation Factor indication on the Model CSM-1 CRT deviates more than ±2.4% AM (Indicated either <27.6% or >32.4%), a potentiometer on the A4A5 PC board (A4A5R9) of the synthesizer is adjusted to change the dc reference voltage inside the feedback loop. Since the AC/DC reference voltage ratio is proportional to the Amplitude Modulation Factor, this change in dc reference voltage changes the actual amplitude modulation of the RF signal.

The adjustment of the amplitude modulation sensitivity for an external modulation signal is very similar. The external applied AC voltage is summed with an internal dc voltage outside of the AM feedback loop; this AC + DC Signal becomes the input reference signal to the feedback loop. By making the added dc voltage variable (A4A5R5), the AC/DC ratio for a fixed external modulation voltage can be varied thereby varying the amplitude modulation. After the AM accuracy is adjusted, the external modulation voltage is set exactly to 0.500 Vrms at the Model CSM-1 EXT AM input connector and A4A5R5 adjusted until both the external modulation meter and the Model CSM-1 CRT indicate 30.0%.

Equipment:

Audio Generator	Hewlett-Packard Model 651B
Amplitude Modulation Meter	Radio meter Model AFM-2

Procedure:

a. Place the Model CSM-1 upside down, remove the cover and unfold the synthesizer assembly (see paragraph 7.4) so that the A4 deck is exposed (see Figure 7-6).

b. Connect the audio generator to the AM INPUT connector (use 50 Ω output), set the frequency to 1 kHz and the output voltage to 0.25 Vrms. (Since the input impedance of the AM INPUT is >40,000 Ω), the actual voltage at the AM INPUT connector is close to twice the indicated output voltage). Connect the Amplitude Modulation Meter to the RF OUTPUT.

c. Set the Model CSM-1 front panel controls as follows:

Frequency Switches:	125.00000 MHz
FUNCTION switch:	GENERATE
AMPLITUDE MODULATION switch:	Pushed (ON)
SWEEP WIDTH control:	OFF
TONE FREQUENCY switch:	EXT AM
TONE LEVEL control:	Maximum (clockwise)
VERT MODE switch:	VERT SET
OUTPUT LEVEL switch:	0 dBm

d. Set the Modulation Meter controls as follows:

Frequency Adjustment:	127 MHz
RF input attenuators:	10 dB
IF BANDWIDTH switch:	±400 kHz
METER switch:	FAST
MAN/AUTO switch:	MAN.
LEVEL Control:	2
FUNCTION switch:	LEVEL
FILTER switch:	3 kHz
METER RANGE switch:	30

e. Fine tune the TUNING adjustment on the Modulation Meter until meter deflection peaks. Switch MAN/AUTO switch to AUTO and set LEVEL control to 6. Check that meter indication is at LEVEL point. Switch FUNCTION switch counter clockwise to IF CHECK and fine tune TUNING control until meter indication is at IF CHECK. Switch FUNCTION switch to +M. Adjust output level of audio generator until the modulation meter indication is exactly 30.0%.

f. Determine the amplitude modulation factor as indicated by the Model CSM-1 by first setting the CRT trace to the VERT SET position then switching the VERT MODE switch to CARR SET and adjusting the CARRIER LEVEL control until the CRT trace lines up with the CARRIER SET line on the CRT graticule, and then switching to 30% AM. If the indicated value deviates more than ±2.4% AM, adjust A4A5R9 (see Figure 7-9). This adjustment only affects the actual AM, therefore, only the indication on the external modulation meter will change. If the CRT indication is for instance 27.2%, adjust A4A5R9 until the external modulation meter also indicates 27.2%.

g. Change the output level of the external audio generator until both the external modulation meter and the CRT on the Model CSM-1 indicate 30.0% AM. If the input voltage at the AM INPUT connector is outside of the 0.45 Vrms to 0.55 Vrms range (output voltage indication on audio generator 0.225 Vrms to 0.275 rms), set the input voltage exactly to 0.5 Vrms (audio generator output voltage 0.250 Vrms), and adjust A4A5R5 until the external modulation meter (and the CSM-1 CRT) indicate 30.0% AM.

7.6.8 400 Hz/1 kHz Audio Frequency and Level Adjustment

Description:

Level adjustments A6A4R14 and A6A4R16 and frequency adjustments A6A4R12 and A6A4R13 are provided on the Audio Oscillator module to set the output level and frequencies of the 400 Hz and the 1 kHz tones, respectively.

Equipment:

1. A frequency counter to measure 400 Hz and 1 kHz with frequency accuracy better than ±0.5%.
2. An oscilloscope to observe and measure 400 Hz and 1 kHz sinewave at 3 V p-p amplitude with an accuracy of ±1%.

Setup:

a. Connect the counter input to the TONE OUTPUT receptacle of the Model CSM-1.

b. Connect the oscilloscope input probe to A6A4J3, the output terminal of the Audio Oscillator module.

c. Set the Model CSM-1 controls as follows:

TONE FREQUENCY to 1 kHz

TONE LEVEL to mid-range.

Procedure:

a. Adjust A6A4R12 (see Figure 7-7) for a reading of 1 kHz ±3 Hz on the counter.

b. Adjust A6A4R14 for 3V ±.05 V p-p display on the oscilloscope. Readjust A6A4R12, if necessary, to keep the frequency display on the counter at 1 kHz ±3 Hz. Check for good sine waveform.

c. Set TONE FREQUENCY switch to 400 Hz.

d. Adjust A6A4R13 for a reading of 400 Hz ±2 Hz on the counter.

e. Adjust A6A4R16 for 3V ±.05V p-p display on the oscilloscope. Readjust A6A4R13, if necessary, to keep the frequency displayed on the counter at 400 Hz ±2 Hz. Check for good sine waveform.

7.6.9 Horizontal Sweep Frequency Adjustment

Description:

An internal sweep frequency adjustment A6A3R15 is provided in the Horizontal Amplifier module to permit master frequency setting. After setting A6A3R15 at 9 Hz, the two ranges of the SWEEP MODE switch are checked to verify that the total range exceeds 10 Hz to 5 kHz.

Equipment:

A frequency counter with a frequency range including 9 Hz to 5 kHz.

Setup:

Connect the frequency counter input to A6A3J12 (see Figure 7-7) (or U1 pin 6). This point provides approximately 3 V p-p sawtooth waveform.

Procedure:

a. Set the SWEEP MODE switch to LO and set the SWEEP RATE control to minimum (fully counter clockwise).

b. Adjust A6A3R15 for 9 Hz on the counter.

c. Set the SWEEP rate control to maximum (fully clockwise) and check the frequency.

d. Set the SWEEP MODE to the HI range. Check the frequency at both ends of the SWEEP RATE control. Verify that the two ranges provide a total sweep frequency range exceeding 10 Hz to 5 kHz.

7.6.10 Vertical Deflection Sensitivity Adjustment

Description:

An internal vertical gain adjustment, A6A2R10, is provided on the Vertical Amplifier module to permit setting the CRT vertical deflection sensitivity at the VERT INPUT receptacle to the specified value: 300 mV p-p ±10% for full scale deflection. This calibration then provides the correct CRT deflection sensitivity for the AM measurement function.

Equipment:

An oscilloscope or other peak-to-peak meter to monitor the level of a 1 kHz sinewave at 300 mV p-p with an accuracy of ±1%.

Setup:

Connect the meter directly to both the TONE OUTPUT receptacle and the VERT INPUT receptacle using shielded cables, BNC connectors and a BNC T junction.

Set the Model CSM-1 controls as follows:

VERT MODE to VERT SET

EXT VERT GAIN to maximum (clockwise)

SWEEP MODE to HI

TONE FREQUENCY to 1 kHz

Procedure:

a. Set CRT controls to produce a horizontal line centered vertically on the CRT graticule. Set the INTENSITY control to a normal level.

b. Set the VERT MODE switch to EXT.

c. Adjust the TONE LEVEL control for exactly 300 mV p-p indicated on the meter.

d. Observe the sine waveform on the CRT. Adjust the SWEEP RATE control for convenient display of several cycles.

e. Set the internal vertical gain adjustment A6A2R10 (see Figure 7-7) for exactly full scale deflection. The peaks of the sine waveform should correspond with the ZERO SET and CARR SET lines on the graticule. Slight adjustment of the VERT POS control may be required to accurately position both the positive and the negative peaks.

7.7 SECONDARY ADJUSTMENTS

Frequency Synthesizer

Adjustments anywhere in the synthesizer section (A1, A2, A3, A4 and A5) should be attempted only by personnel knowledgeable in the theory of operation and only after the specific need has been carefully determined by analysing ALL of the symptoms observed and judged abnormal. Malfunction of the frequency synthesizer manifests itself by:

a. Having no output signal at all in the GENERATE mode.

b. Having no output signal in certain frequency switch positions.

c. Having low output level which cannot be adjusted back to normal using the Power Level Adjustment Procedure in the "Primary Adjustment" section, Paragraph 7.6.3.

d. Having excessive spurious signal levels or noise at certain frequency switch positions.

Malfunctions described under a. and b. are outright failures and their fixes require normal troubleshooting procedures. Malfunctions c. and d. most probably are caused by incorrect tuning or incorrect levels inside of the synthesizer which can be corrected by retuning and readjusting levels.

This section covers those adjustments (tuning and levels) which would normally be performed on a CSM-1 instrument in a well-equipped instrumentation calibration lab to treat most malfunctions of type c. and d. (above).

More comprehensive information on spurious analysis and spur reduction procedures is given in Appendix B. The modular construction of Model CSM-1 lends itself to field replacement of modules where repair and realignment of defective modules may not be feasible.

Table 7-1 "Module Adjustment and Replacement Cross Reference" lists all CSM-1 modules which contain adjustments or which can affect other module adjustments when replaced. For each module the adjustments are itemized, described and referenced to sections in this manual. Replacement information for each module includes suggested checks after replacement, possible touch-up adjustments which may be required when the module is exchanged, and special notes.

NOTE

Singer Instrumentation Customer Service Department should be consulted where there is a question whether to proceed with attempted repairs, exchange modules, or return entire CSM-1 units.

7.7.1 10 MHz Buffer (A1)

Adjustments are normally not required on this module unless the A1 module has been exchanged, or the TCXO has been exchanged and/or it has been determined that the level is incorrect at any of the five 10 MHz outputs.

7.7.1.1 A1 Adjustment Procedure

Using an r.f. voltmeter or oscilloscope with a high impedance input (10 k ohms or more), measure and record the levels at A5J5, A5J6 and A5J7 using a T adaptor to insert at these receptacles. All three levels should be between 1.8 and 2.2 V p-p; if not, adjust A1R1 (Figure 7-2), the master 10 MHz level control; this affects all outputs alike. If the three levels cannot be brought within range by A1R1, then tune A1L3, A1L4 and A1L5 (Figure 7-2) for maximum output at A5J5, A5J6 and A5J7 respectively, and readjust A1R1. If necessary, A1L3, A1L4 or A1L5 may be detuned for reduced level to bring all three within range. If level is too low at one of these, the corresponding output stage Q4, Q5 or Q6 may be at fault. If all three levels are low, the TCXO output may be low (2 V p-p minimum).

Once correct levels are obtained at A5J5, A5J6 and A5J7, then measure the level at A3J3 and adjust A1R15 (Figure 7-2) for 300 mV p-p (270 mV p-p minimum). Insufficient level indicates a faulty Q2 stage or associated wiring.

Finally, the 10 MHz level at the measure section may be checked at A6A1J1 (no T adaptor is required – refer to Figure 7-7). This level should be 450 mV p-p typical. The exact value is not critical. *Do not make any adjustment.* Loss of this output level indicates a faulty Q3 stage or associated wiring.

7.7.2 Localizing Malfunctions to A2/A3 or A4/A5

The main synthesizer assembly consists of the A2/A3 and the A4/A5 deck pair. The two deck pairs are connected together by a single coaxial cable. The signal in this cable has a frequency range of 200-210 MHz (where 210.0 MHz corresponds to xx0.0000 MHz, while 200.0001 MHz corresponds to xx9.9999 MHz) and a level of -30 dBm ±2 dB.

If a malfunction is detected, the synthesizer portion is folded out and the coaxial cable disconnected from the J2 connector on the front tip of the A4 board (see Figure 7-9). A Signal Generator Singer Model 6201 is set to 210.000 MHz and to -30 dBm, and the frequency locked. A spectrum analyzer connected to the RF OUTPUT connector on the front panel of the CSM-1 is used to check the performance of the synthesizer. If the malfunction disappears with the insertion of the Signal Generator, the problem is in the A2/A3 deck pair. If the problem persists, it is in the A4/A5 deck pair (10 MHz and 100 MHz decades).

The Level Adjustment, Tuning and Test Procedure for the synthesizer is therefore divided into two sections: Section 7.7.3 for the A4/A5 deck pair, and Section 7.7.4 for the A2/A3 deck pair. Each deck pair section discusses the procedure for the adjustments of the secondary controls.

7.7.3 Level Adjustment, Tuning and Test Procedure for A4/A5 Deck Pair

Figure 7-11 shows a detailed block diagram of the A4/A5 deck pair with level and frequency indications.

7.7.3.1 200–210 MHz Tuned Amplifier Adjustment (A4A1)

A Model 6201 Signal Generator is connected to the J2 SMB male connector located on the lip of the A4 deck (see Figure 7-9) (for the folding out procedure of the synthesizer, see paragraph 7.4). The level is set to -30 dBm and the frequency to 205.000 MHz and locked. The A4A1Z1 mixer is removed and a 100 kHz – 1400 MHz Spectrum Analyzer is connected with its 50 Ω input impedance through a Mixer Header to BNC Adapter to the L-port input (pin 5) of the A4A1Z1 mixer. For the construction of a Mixer Header to BNC Adapter see Figure 7-10. Alternatively, an Adapter assembly P/N 2-005536-001 with Sealectro SMB male connectors (50-043-0000) may be used. Also, a SMB/BNC (female/Female) cable assembly P/N 2-005538-002 is available.

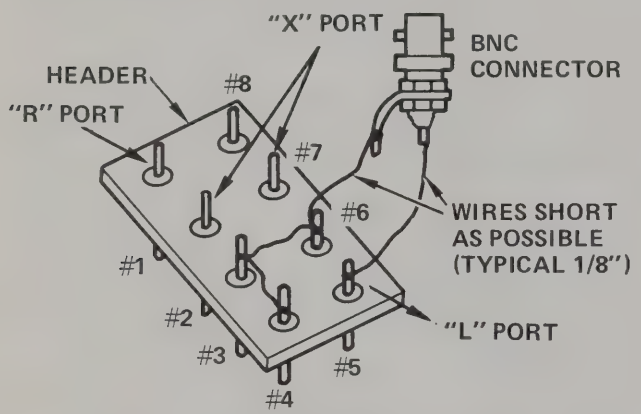

Figure 7-10. Sketch of Mixer Header to BNC Adapter

The single tuned LC circuits of the four amplifier steps of the 200 to 210 MHz tuned amplifier are tuned for maximum signal level by adjusting C27, C33, C39 and C47. The Signal Generator frequency is then varied between 180 and 230 MHz and the level observed. Between 200 and 210 MHz, the level should be between +6 dBm and +8 dBm. If not, the 200-210 MHz gain is adjusted with A4A1R30. The rejection of the 200-210 MHz is checked. Typically at 84 MHz $>$70 dB, at 126 MHz $>$60 dB, at 168 MHz $>$40 dB.

The mixer-header to BNC adapter for L-port connection is exchanged for a mixer header to BNC adapter for X-port connection (pin 2 or 7) and the 80 MHz and 90 MHz signal level and spur level is checked by connecting the Spectrum Analyzer to this adapter. The 80 MHz and 90 MHz signals are switched in by switching from the "0" to the "1" position on the 10 MHz decade switch. If the levels are not correct (-11 dBm to -13 dBm), the X8 and X9 multiplier output levels are adjusted with A4A7R19 and A4A8R19.

With the signal level at the L port input and the signal and spur levels at the X-port input in specifications, the adapter is removed and the mixer A4A1Z1 put back in its place. The A4Z1 mixer is removed and a SMB male to BNC adapter (or cable assembly P/N 2-005538-001) is connected to the X-port SMB male connector. The Spectrum Analyzer is connected to the BNC connector and the signal level and spurious output levels measured. The RF signal generator frequency is varied between 200 and 210 MHz and the 80 MHz and 90 MHz signals are switched in and out to check the rejection of 80 MHz and 90 MHz by the 110-130 MHz filter and, if necessary, adjust C71 to tune the single tuned LC circuit of the 110-130 MHz output amplifier. If the output level between 110 and 130 MHz is not within its range (-11 dBm to -13 dBm), the 110-130 MHz amplifier gain adjustment A4A1R49 is adjusted.

7.7.3.2 810 MHz Multiplier Adjustment, A4A2 and A4A3

The SMB to BNC adapter is connected to the L-port input connector of the A4Z1 mixer, and the Spectrum Analyzer connected to it. The output spectrum should be:

Main signal 810.000 MHz: level +5 to +8 dBm

Sidebands ±10 MHz from main signal: 60 dBc

Sidebands ±90 MHz from main signal: 60 dBc

If the level and spur content are not correct, adjust the X9 multipliers. For level, tune all single tuned circuits, and the two cavity filters of A4A3; for spurs adjust slightly C6 and/or C8 of A4A2.

If it is not possible to reduce the +90 MHz spurs to 61 dBc, but one to 65 dBc and the other one to 60 dBc, this is also satisfactory since the resultant output spurs will be 61 dBc.

Replace the A4Z1 mixer and remove the A4Z2 mixer. Connect the spectrum analyzer through the SMB→BNC adapter to the L-port input of the A4Z2 mixer.

7.7.3.3 920-940 MHz Amplifier (A4A4) Adjustment

Place 10 MHz frequency decade switch to "1" (80 MHz turned on). Set the signal generator frequency to 210 MHz (A4Z1 mail output signal frequency 940 MHz). Level should be between +4 dBm and +7 dBm. Slowly change the signal generator frequency to 200 MHz (A4Z1 main output signal frequency 930 MHz). The level should remain within the +4 to +7 dBm range. All spurs should be $>$61 dBc. Check especially for the 10 MHz sideband spurs and the 90 MHz sideband spurs.

Switch the 10 MHz frequency decade switch to "0" (90 MHz turned on). Again, change frequency slowly from 200 to 210 MHz. The level should remain within the +4 dBm to +7 dBm range. Again, check for spurs.

If the levels are not correct, or the frequency response seems skewed, adjust the tuning of the 920-940 MHz amplifier (A4A4), slightly (C_1 and C_4).

7.7.3.4 140-220 MHz Fixed Frequency Signal Adjustment

The low level (X-port) input for the A4Z2 mixer is provided by the A4A5 (AM modulator) board. It provides the 5 fixed frequencies 140, 160, 180, 200, and 220 MHz for the 10 MHz decade. At the same time, it contains the

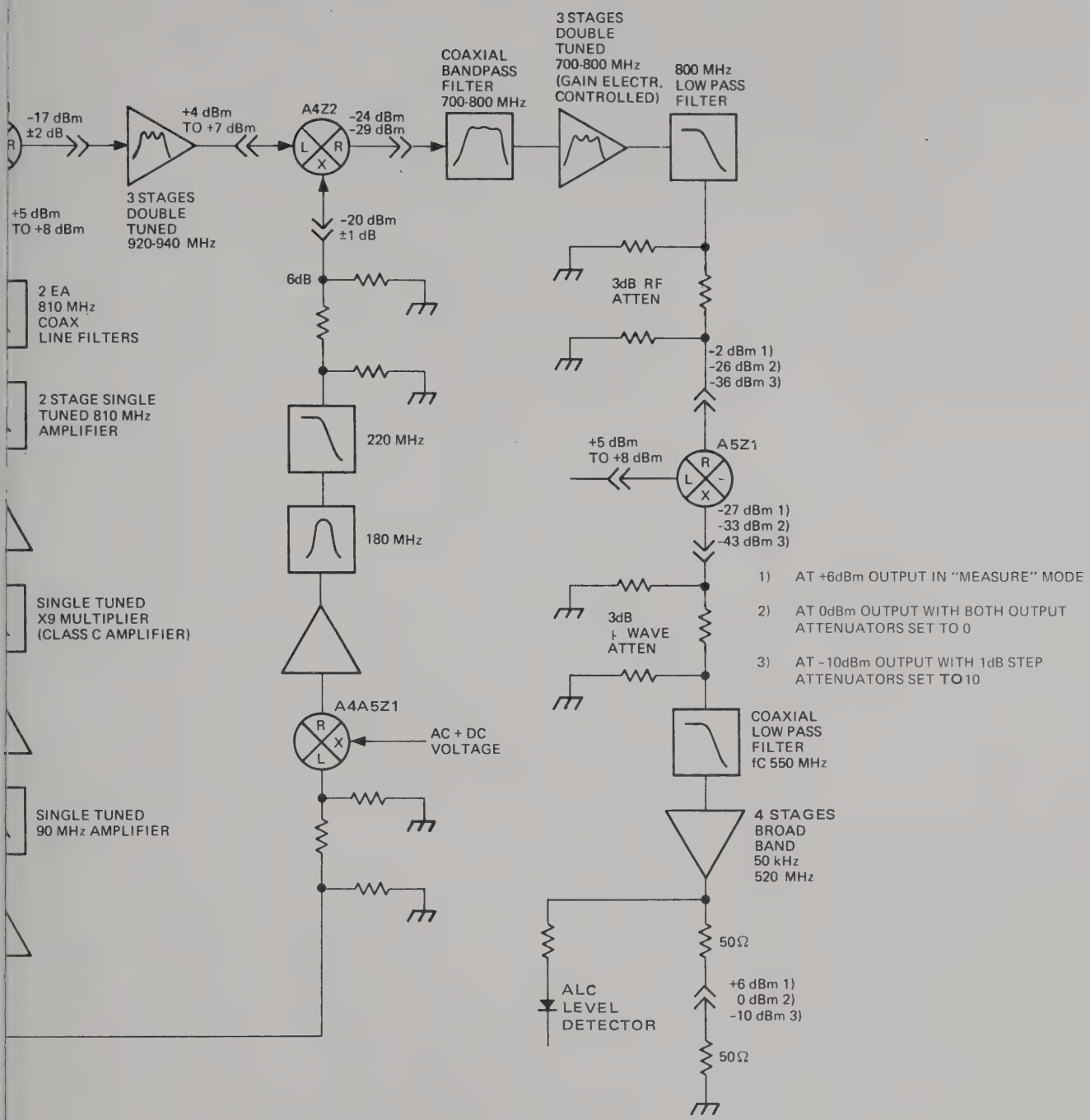

Figure 7-11. Detailed Block Diagram of A4/A5 Deck Pair

The Level Adjustment, Tuning and Test Procedure for the synthesizer is therefore divided into two sections: Section 7.7.3 for the A4/A5 deck pair, and Section 7.7.4 for the A2/A3 deck pair. Each deck pair section discusses the procedure for the adjustments of the secondary controls.

7.7.3 Level Adjustment, Tuning and Test Procedure for A4/A5 Deck Pair

Figure 7-11 shows a detailed block diagram of the A4/A5 deck pair with level and frequency indications.

7.7.3.1 200–210 MHz Tuned Amplifier Adjustment (A4A1)

A Model 6201 Signal Generator is connected to the J2 SMB male connector located on the lip of the A4 deck (see Figure 7-9) (for the folding out procedure of the synthesizer, see paragraph 7.4). The level is set to -30 dBm and the frequency to 205.000 MHz and locked. The A4A1Z1 mixer is removed and a 100 kHz – 1400 MHz Spectrum Analyzer is connected with its 50 Ω input impedance through a Mixer Header to BNC Adapter to the L-port input (pin 5) of the A4A1Z1 mixer. For the construction of a Mixer Header to BNC Adapter see Figure 7-10. Alternatively, an Adapter assembly P/N 2-005536-001 with Sealectro SMB male connectors (50-043-0000) may be used. Also, a SMB/BNC (female/Female) cable assembly P/N 2-005538-002 is available.

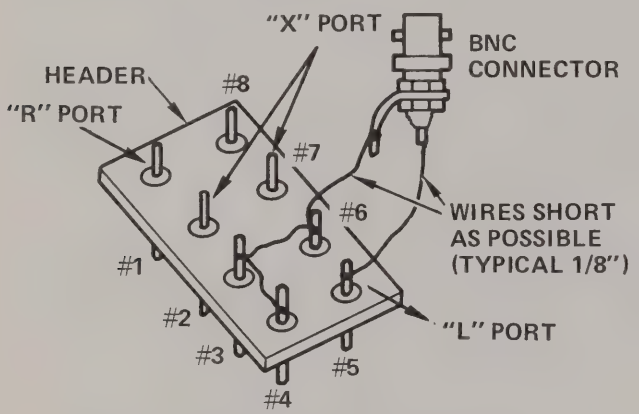

Figure 7-10. Sketch of Mixer Header to BNC Adapter

The single tuned LC circuits of the four amplifier steps of the 200 to 210 MHz tuned amplifier are tuned for maximum signal level by adjusting C27, C33, C39 and C47. The Signal Generator frequency is then varied between 180 and 230 MHz and the level observed. Between 200 and 210 MHz, the level should be between +6 dBm and +8 dBm. If not, the 200-210 MHz gain is adjusted with A4A1R30. The rejection of the 200-210 MHz is checked. Typically at 84 MHz $>$ 70 dB, at 126 MHz $>$ 60 dB, at 168 MHz $>$ 40 dB.

The mixer-header to BNC adapter for L-port connection is exchanged for a mixer header to BNC adapter for X-port connection (pin 2 or 7) and the 80 MHz and 90 MHz signal level and spur level is checked by connecting the Spectrum Analyzer to this adapter. The 80 MHz and 90 MHz signals are switched in by switching from the "0" to the "1" position on the 10 MHz decade switch. If the levels are not correct (-11 dBm to -13 dBm), the X8 and X9 multiplier output levels are adjusted with A4A7R19 and A4A8R19.

With the signal level at the L port input and the signal and spur levels at the X-port input in specifications, the adapter is removed and the mixer A4A1Z1 put back in its place. The A4Z1 mixer is removed and a SMB male to BNC adapter (or cable assembly P/N 2-005538-001) is connected to the X-port SMB male connector. The Spectrum Analyzer is connected to the BNC connector and the signal level and spurious output levels measured. The RF signal generator frequency is varied between 200 and 210 MHz and the 80 MHz and 90 MHz signals are switched in and out to check the rejection of 80 MHz and 90 MHz by the 110-130 MHz filter and, if necessary, adjust C71 to tune the single tuned LC circuit of the 110-130 MHz output amplifier. If the output level between 110 and 130 MHz is not within its range (-11 dBm to -13 dBm), the 110-130 MHz amplifier gain adjustment A4A1R49 is adjusted.

7.7.3.2 810 MHz Multiplier Adjustment, A4A2 and A4A3

The SMB to BNC adapter is connected to the L-port input connector of the A4Z1 mixer, and the Spectrum Analyzer connected to it. The output spectrum should be:

Main signal 810.000 MHz: level +5 to +8 dBm

Sidebands ±10 MHz from main signal: 60 dBc

Sidebands ±90 MHz from main signal: 60 dBc

If the level and spur content are not correct, adjust the X9 multipliers. For level, tune all single tuned circuits, and the two cavity filters of A4A3; for spurs adjust slightly C6 and/or C8 of A4A2.

If it is not possible to reduce the +90 MHz spurs to 61 dBc, but one to 65 dBc and the other one to 60 dBc, this is also satisfactory since the resultant output spurs will be 61 dBc.

Replace the A4Z1 mixer and remove the A4Z2 mixer. Connect the spectrum analyzer through the SMB→BNC adapter to the L-port input of the A4Z2 mixer.

7.7.3.3 920-940 MHz Amplifier (A4A4) Adjustment

Place 10 MHz frequency decade switch to "1" (80 MHz turned on). Set the signal generator frequency to 210 MHz (A4Z1 mail output signal frequency 940 MHz). Level should be between +4 dBm and +7 dBm. Slowly change the signal generator frequency to 200 MHz (A4Z1 main output signal frequency 930 MHz). The level should remain within the +4 to +7 dBm range. All spurs should be $>$ 61 dBc. Check especially for the 10 MHz sideband spurs and the 90 MHz sideband spurs.

Switch the 10 MHz frequency decade switch to "0" (90 MHz turned on). Again, change frequency slowly from 200 to 210 MHz. The level should remain within the +4 dBm to +7 dBm range. Again, check for spurs.

If the levels are not correct, or the frequency response seems skewed, adjust the tuning of the 920-940 MHz amplifier (A4A4), slightly (C_1 and C_4).

7.7.3.4 140-220 MHz Fixed Frequency Signal Adjustment

The low level (X-port) input for the A4Z2 mixer is provided by the A4A5 (AM modulator) board. It provides the 5 fixed frequencies 140, 160, 180, 200, and 220 MHz for the 10 MHz decade. At the same time, it contains the

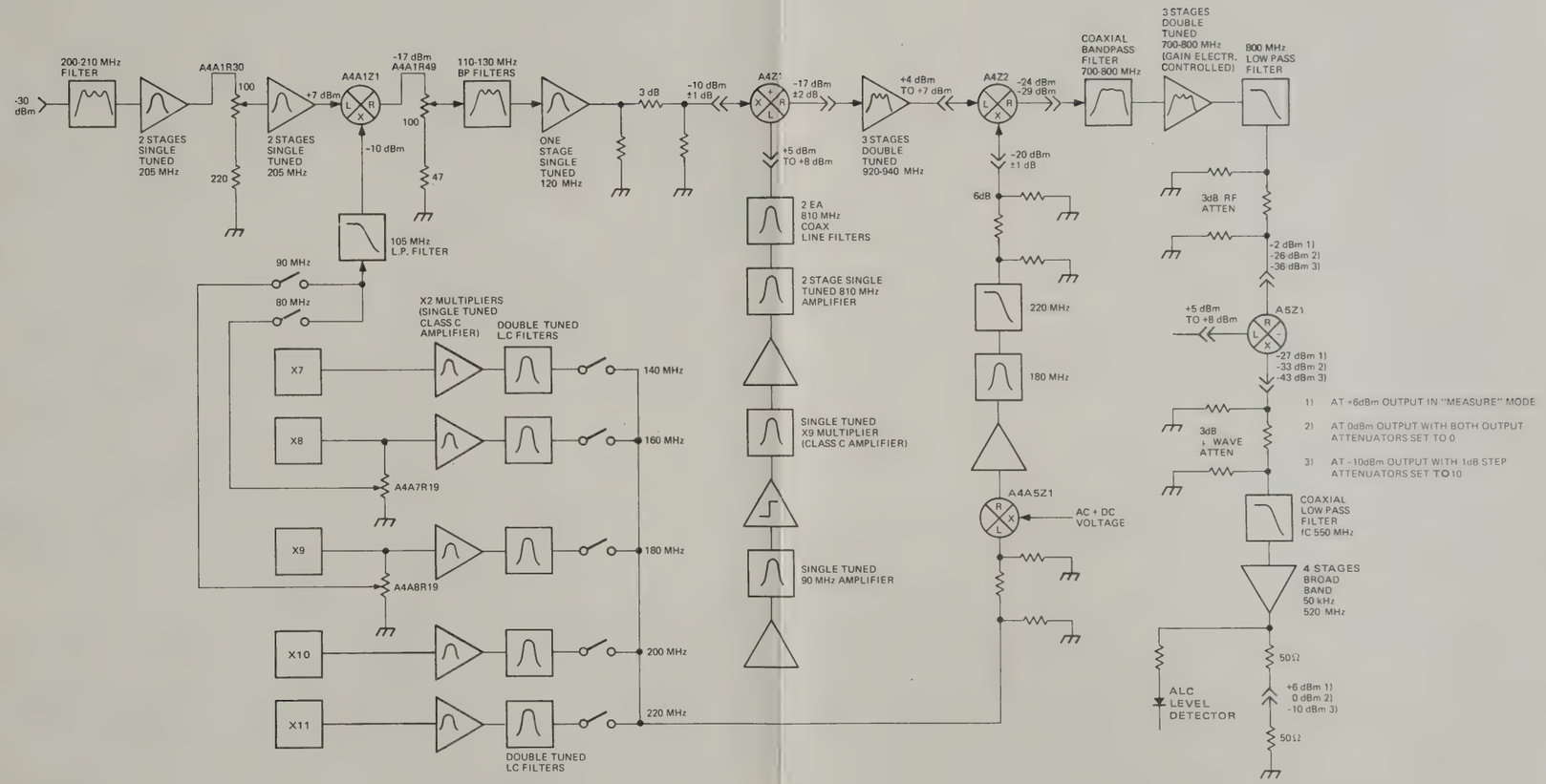
-30 dBm
200-210 MHz FILTER
2 STAGES SINGLE TUNED 205 MHz
A4A1R30
100
220
2 STAGES SINGLE TUNED 205 MHz
+7 dBm
A4A1Z1
-10 dBm
-17 dBm
A4A1R49
100
47
105 MHz L.P. FILTER
90 MHz
80 MHz
110-130 MHz BP FILTERS
ONE STAGE SINGLE TUNED 120 MHz
3 dB
-10 dBm ±1 dB
A4Z1
-17 dBm ±2 dB
+5 dBm TO +8 dBm
2 EA 810 MHz COAX LINE FILTERS
2 STAGE SINGLE TUNED 810 MHz AMPLIFIER
SINGLE TUNED X9 MULTIPLIER (CLASS C AMPLIFIER)
SINGLE TUNED 90 MHz AMPLIFIER
+4 dBm TO +7 dBm
3 STAGES DOUBLE TUNED 920-940 MHz
A4Z2
-24 dBm -29 dBm
-20 dBm ±1 dB
6dB
220 MHz
180 MHz
A4A5Z1
AC + DC VOLTAGE
COAXIAL BANDPASS FILTER 700-800 MHz
3 STAGES DOUBLE TUNED 700-800 MHz (GAIN ELECTR. CONTROLLED)
800 MHz LOW PASS FILTER
3dB RF ATTEN
+2 dBm 1)
-26 dBm 2)
-36 dBm 3)
+5 dBm TO +8 dBm
A5Z1
-27 dBm 1)
-33 dBm 2)
-43 dBm 3)
3dB 1 WAVE ATTEN
COAXIAL LOW PASS FILTER fC 550 MHz
4 STAGES BROAD BAND 50 kHz 520 MHz
50Ω
+6 dBm 1)
0 dBm 2)
-10 dBm 3)
50Ω
ALC LEVEL DETECTOR
X2 MULTIPLIERS (SINGLE TUNED CLASS C AMPLIFIER)
DOUBLE TUNED L.C FILTERS
X7
X8
X9
X10
X11
A4A7R19
A4A8R19
140 MHz
160 MHz
180 MHz
200 MHz
220 MHz
DOUBLE TUNED LC FILTERS
1) AT +6dBm OUTPUT IN "MEASURE" MODE
2) AT 0dBm OUTPUT WITH BOTH OUTPUT ATTENUATORS SET TO 0
3) AT -10dBm OUTPUT WITH 1dB STEP ATTENUATORS SET TO 10

amplitude modulation for the RF output signal in the GENERATE mode. Since the output level is stabilized by a feedback system using a linearized diode detector as level indicator, and a doubly balanced mixer as voltage variable attenuator, the output level (-20 dBm) should be quite accurate and independent of RF frequency (±1 dB).

The spectrum analyzer is disconnected from the L-port input connector for A4Z2 and connected to the X-port input connector through the SMB to BNC adapter.

In the "0" or "1" position, the 10 MHz frequency switch switches in the 140 MHz signal, in the "2" or "3" positions the 160 MHz signal, etc. See Figure A-1 for frequency allocations. If any of the fixed frequencies show up as excessive spurs, check that the unused multipliers are turned off (+9 V removed). The diode switch isolation on the A4A5 board is 60 dB, and since the reduction in multiplied output with the entire multiplier switched off (140, 200, 220 MHz frequencies) or the doubler switched off (160, 180 MHz) is at least 30 dB, the unused signal spur should be >80 dBc.

The important output spurs of the 140, 160, 180, 200, and 210 MHz fixed frequencies are the ±10 MHz sideband spurs, and the 3rd harmonic of the 70 MHz and 80 MHz subharmonic.

The 10 MHz sideband spurs can be reduced by fine adjusting C8 on each multiplier (A4A6C8, A4A7C8, A4A8C8, and A4A10C8).

If the level of the 3rd harmonics of the 70 and 80 MHz signals (210 MHz, 240 MHz) are above the 61 dBc level, remove the balanced modulator A4A5Z1 in the A4A5 module and replace with a fixed 6 dB attenuator mounted in a mixer package. Fine adjust C12 and C15 of the particular multiplier until the spur is > 61 dBc.

Remove the 6 dB attenuator and the spectrum analyzer adapter and reinsert the A4A5Z1 modulator and the A4Z2 mixer.

7.7.3.5 0.8, 0.9, 1.0, 1.1, 1.2, 1.3 GHz High Frequency Multipliers (A5A3 Thru A5A8)

Remove the A5Z1 mixer and connect a power meter through an SMB to BNC adapter to the L-port input of the A5Z1 mixer. The output power of each high frequency multiplier should be between +4 dBm and +8 dBm. If the output power levels are too low, realign the two coaxial cavity type output filters, C12, and C16 of the particular multiplier for maximizing the output level.

Disconnect the power meter and connect the spectrum analyzer, and by switching the 100 MHz frequency switch from 0 to 5, check the spectral purity of each high frequency signal. If the spur levels are not all below the 56 dBc level, fine adjust C8 of the particular multiplier.

If it is possible to reduce one 100 MHz sideband below 66 dBc but the other one only to 53 dBc, this is still OK, since the mixer limiting action will reduce the 100 MHz away spurs to 56 dBc (lowers the higher level spur by about 3 dB, increases the lower level spur by about 3 dB).

If correct output level and/or ±10 MHz spurious suppression cannot be obtained on several of the high frequency multipliers, then A5A1 should be checked; see section 7.7.3.6.

7.7.3.6 X10 Multiplier, 10 MHz to 100 MHz (A5A1)

Remove the A5A3 high frequency multiplier module, and connect an r.f. power meter to J1 with an adaptor. Special adapter P/N 2-005537-001, may be used. Set the 100 MHz frequency switch (CSM-1 front panel) to 0. The power level should be 0 dBm ±1 dB; if not, adjust A5A1R19 for 0 dBm or at least -1 dBm. If this level cannot be obtained, adjust the following for peak power indication, in sequence: C18, C15, C12 and C8.

Disconnect the power meter and connect the Spectrum Analyzer to check the 100 MHz output and spurious levels at 90 MHz and 110 MHz (-60 dBc typical). Readjust C8 if necessary. Also if necessary, C6 may be adjusted, being careful not to shift C6 to a different peak which may be a false one. To verify correct multiplier operation, refer to Section 7.7.3.7. If necessary, repeat adjustments on C18, C15, C12, C8, C6 and R19.

7.7.3.7 Verifying Correct C6 Tuning on Low Frequency Multipliers (A4A2, A4A6 through A4A10 and A5A1)

Correct tuning of the Class C multiplier stage in these modules may be verified by sampling the induction field from L1 with a one turn 1/8" diameter loop inserted just inside the C8 alignment hole in the module shield cover. This avoids unsoldering the shield cover, which can disturb correct alignment. The waveform is observed on a high frequency oscilloscope, synchronized to display the trapezoidal waveform shown on the schematic diagrams of these modules. Incorrect setting of C6 to a false peak causes the transition from minimum to maximum level of the trapezoid to become distorted with several uneven cycles.

7.7.4 Level Adjustment, Tuning and Test Procedure for A2/A3 Deck Pair

Figures 5-4 and 5-5 show detailed block diagrams of the A2/A3 deck pair with frequency indications.

7.7.4.1 Fixed Frequency Generator PC Board (A3A1) Level and Tuning Adjustments

Figure 7-12 shows a detailed block diagram of the fixed frequency generator PC board showing the test points, the level adjustments and important levels at the outputs and inside the fixed frequency generator. Each frequency has its own output control. If there are 3 output connectors for one frequency (12.6 MHz for instance) one output control sets the output level for all three.

It should normally be possible to adjust the levels for the 9 different fixed output frequencies with their respective output control. (See Figure 7-12).

The output frequencies and their respective output level controls are:

2.1 MHz (one output connector): A3A1 R149
6.0 MHz (two output connectors): A3A1 R76
6.1 MHz (two output connectors): R133
6.2 MHz (two output connectors): R168
6.3 MHz (two output connectors): R154
12.0 MHz (three output connectors): R32
12.2 MHz (three output connectors): R112
12.4 MHz (one output connector: R13
12.6 MHz (three output connectors): R64

The level set procedures for the decade PC boards call for adjustments of levels on the fixed frequency generator board. Whenever these adjustments are completed the actual output level of the fixed frequency signals should be checked, to make sure that they are within ±10% of the specified output level, since each control (except the 2.1 MHz and 12.4 MHz) controls more than one output connector.

If it is not possible to adjust the amplitude of a particular output signal to the proper level, an overall fixed frequency level adjustment might have to be performed.

Since all the fixed frequencies are derived from 10 MHz through dividing and mixing (adding or subtracting), it is very important to follow this level procedure as shown below. Figure 7-13 shows the locations of the adjustment openings in the A3A1 cover.

a. Connect an oscilloscope through a high impedance AC coupled probe to TP1.

b. Adjust the 10 MHz source level (A1 R15) for 300 mV p-p at TP1. (Refer to Section 7.7.1)

c. Connect the probe to TP2 and adjust R55 for 300 mV p-p.

d. Connect the probe to TP3 and adjust R54 for 300 mV p-p.

e. Connect the probe to J4 and tune L12, L13 and L15 for a peak. Set R32 for 380 mV p-p. Check for 380 mV p-p ±10% at J5 and J6.

f. Connect the probe to J11 and tune L30 for a peak. Adjust R76 for 380 mV p-p. Check for 380 mV p-p ±10% at J12.

g. Connect the probe to TP4 and adjust R75 for 300 mV p-p.

h. Connect the probe to TP5 and tune L34, L35, and L37 for a peak. Adjust R97 for 300 mV p-p.

i. Connect the probe to J3 and tune L6, L7, and L9 for a peak. Adjust R13 for 380 mV p-p.

j. Connect the probe to J22 and adjust R168 for 380 mV p-p. Check for 380 mV p-p ±10% at J23.

k. Connect the probe to TP6 and tune L1, L2, and L4 for a peak. Adjust R3 for 300 mV p-p.

l. Connect the probe to J8 and tune L24, L25, and L27 for a peak. Adjust R64 for 380 mV p-p. Check for 390 mV p-p ±10% at J9 and J10.

m. Connect the probe to J20 and tune L55 for a peak. Adjust R154 for 380 mV p-p. Check for 380 mV p-p ±10% at J21.

n. Connect the probe to TP7 and adjust R147 for 300 mV p-p.

o. Connect the probe to J19 and adjust R149 for 40 mV p-p.

p. Connect the probe to J14 and tune L40, L41, and L43 for a peak. Adjust R112 for 380 mV p-p. Check for 380 mV p-p ±10% at J15 and J16.

q. Connect the probe to J17 and adjust R133 for 380 mV p-p. Check for 380 mV p-p ±10% at J18.

7.7.4.2 100 Hz Decade PC Board (A2A2) Level and Tuning Adjustments

Set the lowest 5 decade frequency switches to 0 (xx0.0000) and the 0-100 Hz dial to OUT. Connect an oscilloscope through a high impedance ($\geq$1 MΩ, $\leq$5 pF) probe to A2A2U1, pin 11 (low level input to first mixer of 100 Hz decade PC board). The input signal should be sinusoidal (2.1 MHz) and have an amplitude between 27 MV and 33 mV p-p. If the level is outside of this range, adjust A3A1 R149 (on A3A1 fixed frequency generator PC board) for 30 mV ±1 mV p-p. Switch the "0-100 Hz" dial to "0" and the 100 Hz frequency switch to "V" (the fixed frequency 2.1 MHz signal is replaced by the 2.0 to 2.1 MHz VCO signal). Again, check the signal level at A2A2U1. It should be a sinusoidal signal (2.1 MHz) with an amplitude between 27 mV and 33 mV p-p. If the amplitude is outside of this range, adjust A2A1 R41 for 30 mV ±1 mV p-p. Figure 7-14 shows the locations of the adjustment openings in the A2A2 cover. Slowly turn the "0-100 Hz" frequency dial from "0" to "10" and observe the amplitude. It should remain between 27 mV and 33 mV p-p. If not, exchange the A2A1 VCO PC board.

Set the "0-100 Hz" dial to "OUT" again and the 100 Hz frequency switch back to "0". Connect the probe to A2A2U1 pin 5, the high level (L.O) input into the first mixer U1. The signal should be sinusoidal (6.3 MHz), and have an amplitude between 270 mV p-p and 330 mV p-p. If the amplitude is outside of this range check the amplitude on the 6.3 MHz input connector A2A2J13. It should be between 350 mV and 410 mV p-p. If the amplitude is again outside of this range, adjust A3A1R154 (on the A3A1 fixed frequency generator PC board) for an amplitude of

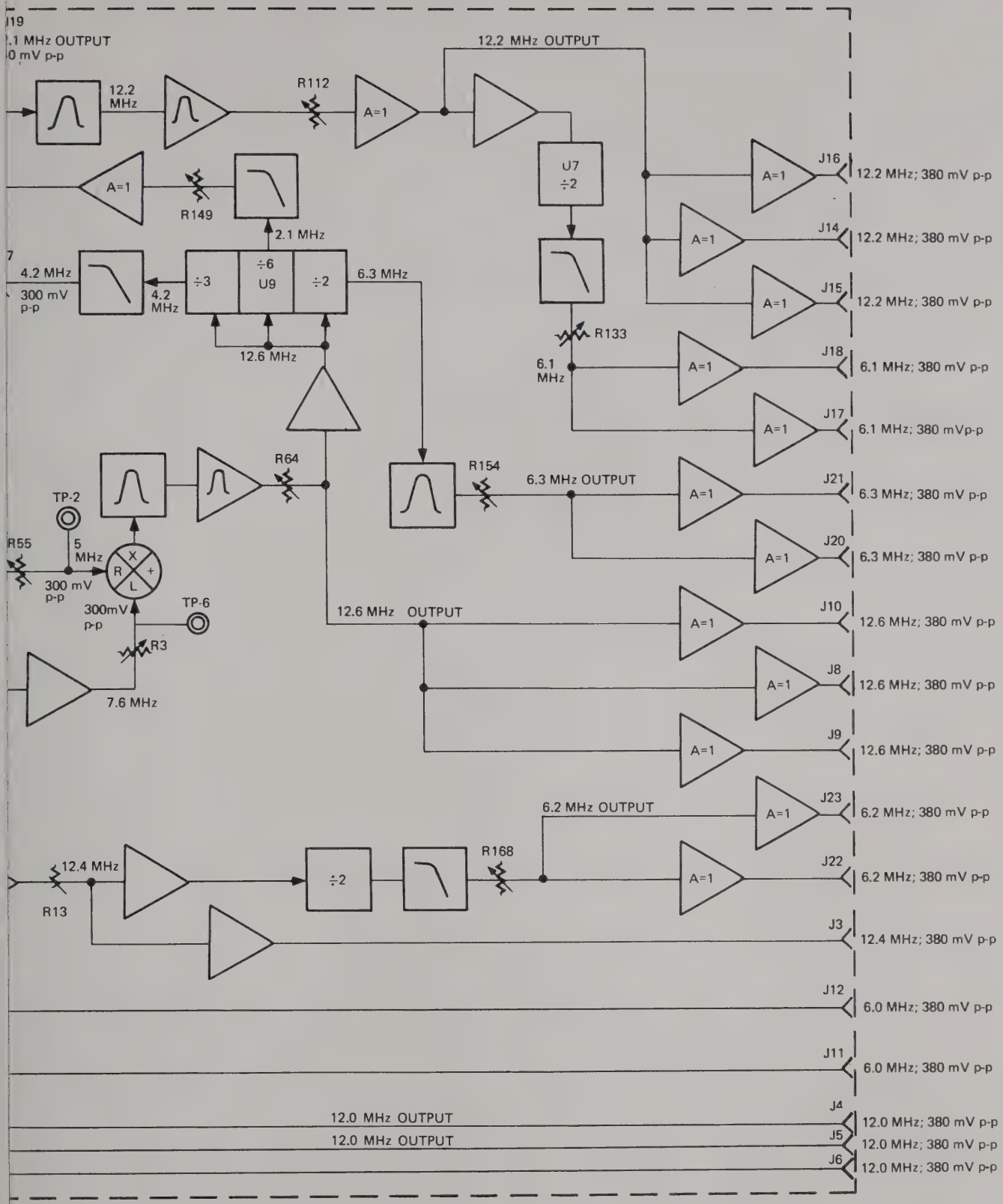

Figure 7-12. Detailed Block Diagram of Fixed Frequency Generator PC Board (A3 A1) Showing Level Adjust Circuits and Output Levels

The output frequencies and their respective output level controls are:

2.1 MHz (one output connector): A3A1 R149
6.0 MHz (two output connectors): A3A1 R76
6.1 MHz (two output connectors): R133
6.2 MHz (two output connectors): R168
6.3 MHz (two output connectors): R154
12.0 MHz (three output connectors): R32
12.2 MHz (three output connectors): R112
12.4 MHz (one output connector: R13
12.6 MHz (three output connectors): R64

The level set procedures for the decade PC boards call for adjustments of levels on the fixed frequency generator board. Whenever these adjustments are completed the actual output level of the fixed frequency signals should be checked, to make sure that they are within ±10% of the specified output level, since each control (except the 2.1 MHz and 12.4 MHz) controls more than one output connector.

If it is not possible to adjust the amplitude of a particular output signal to the proper level, an overall fixed frequency level adjustment might have to be performed.

Since all the fixed frequencies are derived from 10 MHz through dividing and mixing (adding or subtracting), it is very important to follow this level procedure as shown below. Figure 7-13 shows the locations of the adjustment openings in the A3A1 cover.

a. Connect an oscilloscope through a high impedance AC coupled probe to TP1.

b. Adjust the 10 MHz source level (A1 R15) for 300 mV p-p at TP1. (Refer to Section 7.7.1)

c. Connect the probe to TP2 and adjust R55 for 300 mV p-p.

d. Connect the probe to TP3 and adjust R54 for 300 mV p-p.

e. Connect the probe to J4 and tune L12, L13 and L15 for a peak. Set R32 for 380 mV p-p. Check for 380 mV p-p ±10% at J5 and J6.

f. Connect the probe to J11 and tune L30 for a peak. Adjust R76 for 380 mV p-p. Check for 380 mV p-p ±10% at J12.

g. Connect the probe to TP4 and adjust R75 for 300 mV p-p.

h. Connect the probe to TP5 and tune L34, L35, and L37 for a peak. Adjust R97 for 300 mV p-p.

i. Connect the probe to J3 and tune L6, L7, and L9 for a peak. Adjust R13 for 380 mV p-p.

j. Connect the probe to J22 and adjust R168 for 380 mV p-p. Check for 380 mV p-p ±10% at J23.

k. Connect the probe to TP6 and tune L1, L2, and L4 for a peak. Adjust R3 for 300 mV p-p.

l. Connect the probe to J8 and tune L24, L25, and L27 for a peak. Adjust R64 for 380 mV p-p. Check for 390 mV p-p ±10% at J9 and J10.

m. Connect the probe to J20 and tune L55 for a peak. Adjust R154 for 380 mV p-p. Check for 380 mV p-p ±10% at J21.

n. Connect the probe to TP7 and adjust R147 for 300 mV p-p.

o. Connect the probe to J19 and adjust R149 for 40 mV p-p.

p. Connect the probe to J14 and tune L40, L41, and L43 for a peak. Adjust R112 for 380 mV p-p. Check for 380 mV p-p ±10% at J15 and J16.

q. Connect the probe to J17 and adjust R133 for 380 mV p-p. Check for 380 mV p-p ±10% at J18.

7.7.4.2 100 Hz Decade PC Board (A2A2) Level and Tuning Adjustments

Set the lowest 5 decade frequency switches to 0 (xx0.0000) and the 0-100 Hz dial to OUT. Connect an oscilloscope through a high impedance ($\geq$1 MΩ, $\leq$5 pF) probe to A2A2U1, pin 11 (low level input to first mixer of 100 Hz decade PC board). The input signal should be sinusoidal (2.1 MHz) and have an amplitude between 27 MV and 33 mV p-p. If the level is outside of this range, adjust A3A1 R149 (on A3A1 fixed frequency generator PC board) for 30 mV ±1 mV p-p. Switch the "0-100 Hz" dial to "0" and the 100 Hz frequency switch to "V" (the fixed frequency 2.1 MHz signal is replaced by the 2.0 to 2.1 MHz VCO signal). Again, check the signal level at A2A2U1. It should be a sinusoidal signal (2.1 MHz) with an amplitude between 27 mV and 33 mV p-p. If the amplitude is outside of this range, adjust A2A1 R41 for 30 mV ±1 mV p-p. Figure 7-14 shows the locations of the adjustment openings in the A2A2 cover. Slowly turn the "0-100 Hz" frequency dial from "0" to "10" and observe the amplitude. It should remain between 27 mV and 33 mV p-p. If not, exchange the A2A1 VCO PC board.

Set the "0-100 Hz" dial to "OUT" again and the 100 Hz frequency switch back to "0". Connect the probe to A2A2U1 pin 5, the high level (L.O) input into the first mixer U1. The signal should be sinusoidal (6.3 MHz), and have an amplitude between 270 mV p-p and 330 mV p-p. If the amplitude is outside of this range check the amplitude on the 6.3 MHz input connector A2A2J13. It should be between 350 mV and 410 mV p-p. If the amplitude is again outside of this range, adjust A3A1R154 (on the A3A1 fixed frequency generator PC board) for an amplitude of

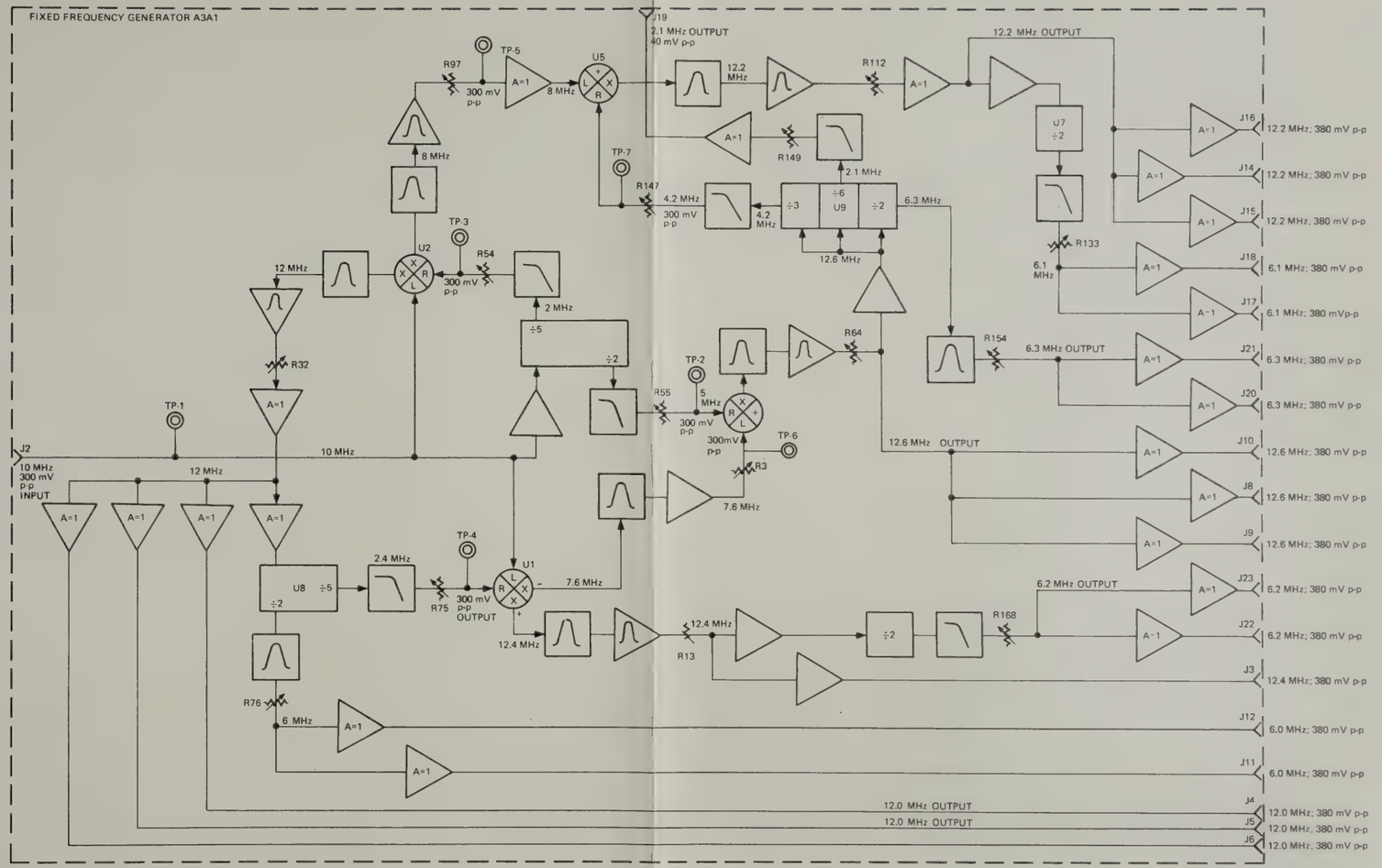

Figure 7-12. Detailed Block Diagram of Fixed Frequency Generator PC Board (A3 A1) Showing Level Adjust Circuits and Output Levels

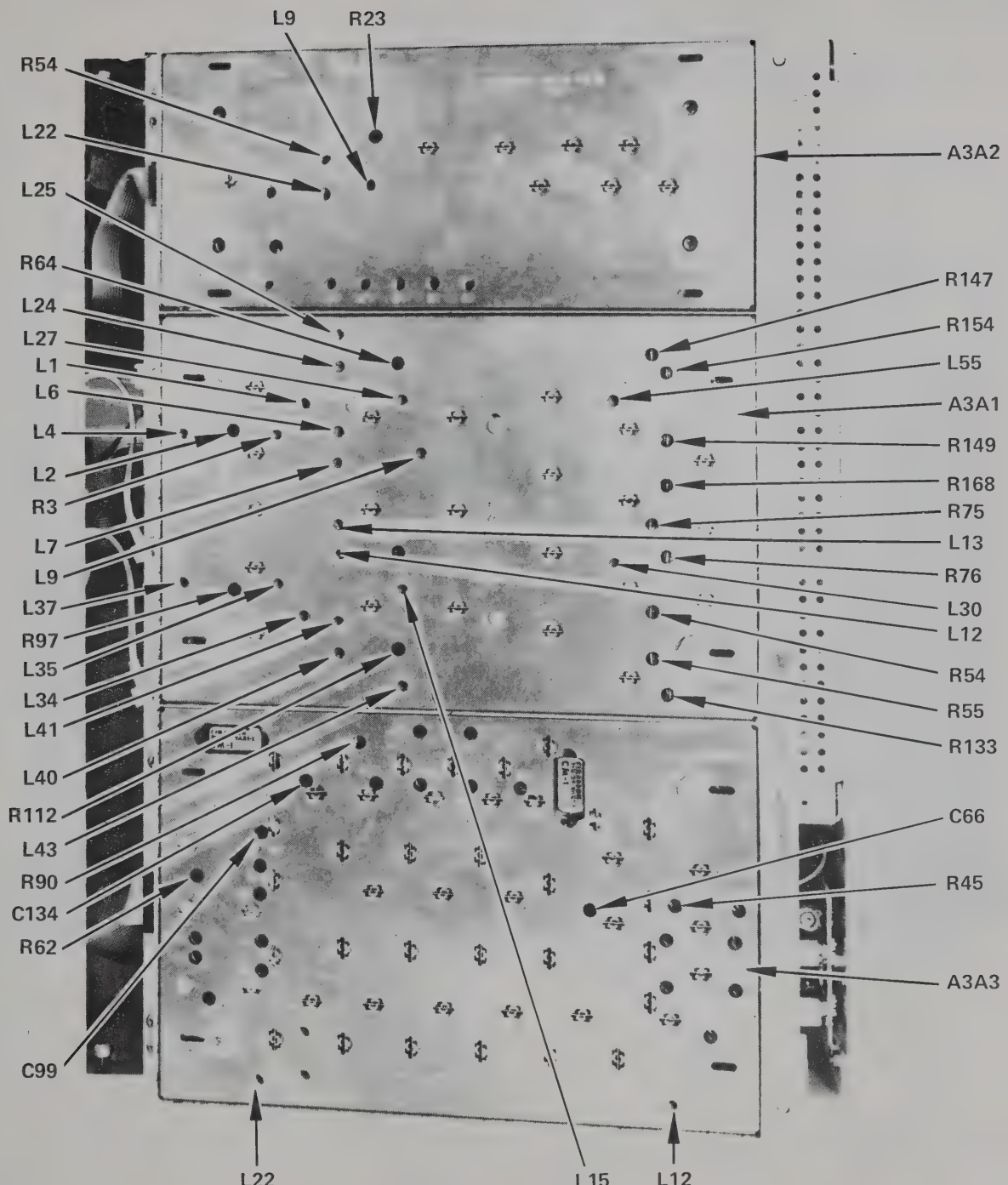

Figure 7-13. Adjustment Control Location, A3 Deck

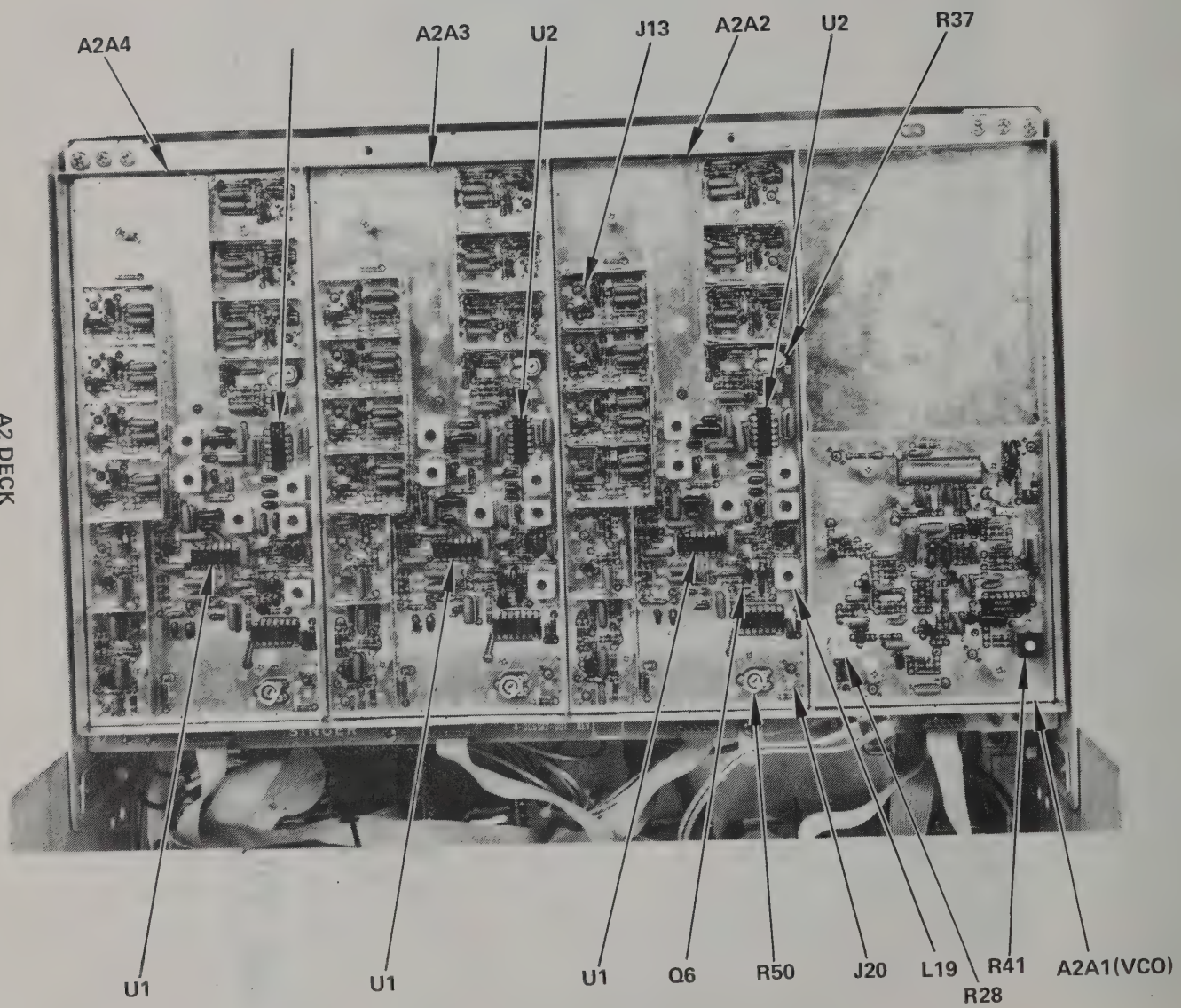

Figure 7-14. Adjustment Control Locations, A2 Deck (A2A2, A3A3 & A2A4 Identical)

380 mV p-p ±5 mV. Connect the probe back to A2A2U1, Pin 5 and switch the 100 Hz frequency switch to 1. The frequency should be 6.2 MHz, but the amplitude specifications are the same. Follow the adjustment procedure as described before for the 6.3 MHz signal, except, if the amplitude of the 6.2 MHz input signal is outside of its range, adjust A3A1R168.

Switch the 100 Hz frequency switch to "2" (input frequency 6.1 MHz) and follow the same level check and adjustment procedure. The level setting potentiometer on the fixed frequency generator PC board is A3A1R133.

Switch to "3" (input frequency 6.0 MHz) and again follow the same level check and adjustment procedure. The level setting potentiometer on the fixed frequency generator PC board is A3A1R76.

Switch through the remaining 100 Hz switch positions (4 through 9). Since the same input signals are used as before, all levels should be within the specified range.

Switch the 100 Hz decade frequency switch back to "0". Connect the probe to A2A2U2, pin 5 (the high level or L.O. input to mixer #2) and measure the L.O. signal amplitude (12.6 MHz signal). It should be between 135 mV and 165 mV p-p. If not, adjust A2A2R37 for an amplitude of 150 mV ±5 mV p-p.

Switch the 100 Hz decade frequency switch to "4" (input level 12.2 MHz) and check the amplitude. It should be between 135 and 165 mV p-p.

Switch to "8" and check the amplitude again (input signal 12.0 MHz). It should also be between 135 mV and 165 mV p-p.

Set the 100 Hz decade frequency switch back to "0". Connect the oscilloscope through a 50 Ω shunt resistor to A2A2 J20 or use the 50 Ω input on the oscilloscope vertical amplifier. Check the output signal. It should be a square wave (2.1 MHz) with an amplitude between 38 mV p-p and 42 mV p-p. If the amplitude is not in this range, adjust A2A2 R50. Switch from "0" to "9" to assure that all amplitudes are within the 38 to 42 mV p-p range. If the amplitude changes, or if the amplitude at certain switch positions seems erratic, connect the oscilloscope through the AC coupled probe to the base of Q6 and observe the amplitude change of the 20 to 21 MHz signal while switching from "0" to "9". If the amplitude falls off on either side, fine adjust L-19 to make the amplitude constant (within ±10%) over the 20 to 21 MHz range. Disconnect the oscilloscope.

Connect the spectrum analyzer to A2A2 J20. Set the center frequency to 2.05 MHz (main signal frequency at "5" setting of 100 Hz decade frequency switch). Set dispersion to 200 kHz/Div, bandwidth to 30 kHz. Switch through all 100 Hz decade frequency switch positions and check for spurious signals visible on the screen. All should be $\geqslant 40$ dBc.

Since this is the lowest decade, the output signal frequency will be divided by 100 before adding to the final synthesizer output signal and therefore the spur level will be reduced by about 40 dB. A 40 dBc spur level at the 100 Hz decade output will be therefore decreased to > 70 dBc.

The input waveform driving frequency divider U3 should be observed at TP2 using an oscilloscope with high impedance input (>10 k ohms), direct coupled. The waveform should be a normal TTL drive pulse, with peak level > +2.8 V and baseline level < +0.7 V for all 9 positions of the 100 Hz frequency switch.

7.7.4.3 1 kHz Decade PC Board (A2A3) Level and Tuning Adjustments

This level adjust and tuning procedure is identical to the 100 Hz Decade, except that the 1 kHz decade switch is used, and the 6.0, 6.1, 6.2, 6.3 MHz levels are already set properly and the voltage amplitudes on A2A3U1 pin 5 should be within the 27 to 33 mV p-p range. If not, exchange the A2A3 PC board. The spurs should be below the 50 dBc level. Check U3 drive as in Section 7.7.4.2 at all positions of the 1 kHz frequency switch.

7.7.4.4 10 kHz Decade PC Board (A2A4) Level and Tuning Adjustments

This level adjust and tuning procedure is identical to the 1 kHz Decade, except that the spurs should be below the 60 dBc level. Check U3 drive at TP 2 as in Section 7.7.4.2 at all 9 positions of the 10 kHz frequency switch.

7.7.4.5 100 kHz Decade PC Board (A3A2) Level and Tuning Adjustments

Figure 7-13 is a photograph of the A3 deck and shows the location of the adjustment openings in the PC board covers. The level checking procedure on the first mixer A3A2U1 is identical to the 10 kHz procedure, except that the low level input amplitude is 20 mV p-p instead of 30 mV p-p.

Connect the oscilloscope with the high impedance probe to TP-2. Switch the 100 kHz decade frequency switch from "0" to "9" and observe the amplitude and its change. The amplitude should be at least 30 mV p-p at all switch positions, and the change should be less than 10%. If it is more, fine adjust L9 until change is less than 10%.

Connect the high impedance probe to A3A2U2, pin 11 and check the amplitude. It should be between 27 mV p-p and 33 mV p-p. If not, adjust R23 until the amplitude is 30 mV ±1 mV p-p.

Remove A3A3Z1 mixer and insert test header (as in Figure 7-10 but wired to measure signal level at the X-port pins #2 or #7 instead of #5) connected to 50 ohm oscilloscope input. Refer to Paragraph 7.7.3.1 for a description of a special adapter that is available. The measured A3Z3Z1 X port level should be between -22 dBm ±2 dB for any 100

kHz decade frequency switch position. If not, fine tune L22 for peak and adjust A3A2R54 for correct level.

7.7.4.6 1 MHz Decade PC Board (A3A3) Level and Tuning Adjustments

For locations of adjustment openings, see Figure 7-13. Set the 100 Hz, 1 kHz, 10 kHz and 100 kHz and 1 MHz Decade Frequency switches to "0" ("0-100 Hz" dial to OUT). Remove mixer #1 (A3A3Z1) and connect a 50 Ω power meter through a mixer-header to BNC adapter (see Figure 7-10) to the L port input pin (pin #5). Fine tune L12 and C66 for maximum power output; the output level should be between +7 dBm and +9 dBm; if not, adjust A3A3 R45. Connect the power meter through another mixer-header to BNC adapter to the low level input pin of the first mixer (pin #2 or #7). The level should be between -9 and -12 dBm. There is no adjustment. Switch the 100 kHz decade frequency switch to "V", and set the "0-100 Hz" dial to 0. The power level should remain between -9 and -12 dBm. Rotate the 0-100 Hz dial over its full range. The power level still should remain between -9 dBm and -12 dBm.

Reinsert the first mixer and remove the second mixer A3A3Z2. Connect the power meter through a mixer-header to BNC adapter to the L-port input pin (pin #5), and check the power level. It should be between +7 dBm and +9 dBm. If it is not, fine tune C-99 and L-22 for maximum output and set A3A3 R62 for 7 dBm +2.0 dBm -0 dBm.

Connect the power meter through a mixer-header to BNC adapter to the low level (X-port) input pin (pin 2 or 7) of the second mixer. The power level should be between -19 dBm and -22 dBm. If it is not, fine tune C134 for maximum output, and adjust A3A3 R90 for a power level of -20 dBm +0 -0.2 dBm.

Reinsert mixer #2. Connect power meter to A3J4. The power output should be between -27 dBm and -31 dBm.

7.7.5 Measure Section and Power Supply

There are only two secondary controls in the Measure Section, the 11 MHz IF peaking control on the A22 Broadband Measure Amplifier, and the current limiting control on the A7 Power Supply PC board.

7.7.5.1 Tuning Procedure for 11 MHz Peaking Control A22L7

Remove the CSM-1 cover. Connect a Singer Model 6201 Signal Generator to the RF INPUT connector of the CSM-1. Set the frequency to 128.500 MHz and lock it. Set the power level to -47 dBm (1 mV), release the VX2 pushbutton, and push the CW pushbutton. Set the CSM-1 controls as follows:

Frequency Decade Switches:	128.5000 OUT
FUNCTION switch:	MEASURE, 0.06 TO 2 mV
AGC/MANUAL switch:	MANUAL
VERT MODE switch:	VERT SET
SWEEP WIDTH control:	OFF
AMPLITUDE MODULATION pushbutton:	OFF (released)

Using the VERT POS control, adjust the CRT trace to line up with the VERT POS line on the CRT graticule. Switch the VERT MODE switch to CARR SET and adjust the CARRIER LEVEL control for a CRT trace just below the CARRIER LEVEL line on the CRT graticule.

The A22 Broadband Measure Amplifier is mounted on the left side of the chassis (outside wall of the CRT housing). Adjust A22L7 until CRT trace peaks. Due to the long time constant in the detector for the carrier level setting, this adjustment has to be made slowly, so that the CRT trace will peak properly.

7.7.5.2 Current Limit Setup Procedure for Regulated +9 V Supply A7 (A7R3)

Remove cover from CSM-1. Turn CSM-1 off. Set CSM-1 on its side. Short out the +9 V supply by connecting the top of one of the 3 terminal posts for the +9 V supply distribution (See Figure 7-7, A6 assembly) to chassis ground with a clip lead. Connect a current probe around the red wire which connects the 3 terminal posts to the shunt capacitor on the chassis just past the edge of the A6 board. Turn CSM-1 on and note the current reading. If this is not within 175 mA ±25 mA, adjust A7R3 for 175 mA using an insulated screwdriver through the hole marked A7R3 (see Figure 7-3).

NOTE

This hole, which is normally closed by a plug button, also provides access to A7R10 (+9 V Voltage Set). Relative locations of A7R10 and A7R3 are indicated by chassis stamping. ***Avoid disturbing A7R10*** – refer to Section 7.6.1 should adjustment be required.

Table 7-1. Module Adjustment and Replacement Cross Reference

The following table itemizes the adjustable components in each module indicated by type: P = primary; S = secondary; T = tertiary. Refer to Paragraph 7.5.3 for definition of these types. Before attempting any P or S adjustment, consult the referenced section and read carefully. Do not attempt alignment of type T adjustments without special factory information not included herein.

Module Function	Adjustments				Module Replacement Information				
	Type	Ref. Desig.	Description	Sect	Checks Suggested After Repl.	Sect	Possible Touch-Up Adjustments	Sect	Notes
TCXO	P	Y1	10 MHz Freq	7.6.2	Freq. Accuracy 10 MHz Level	6.5.1 7.7.1.1	TCXO Freq. A1R1	7.6.2 7.7.1.1	
A1 10 MHz Buffer	S S S S S	L3 L4 L5 R1 R15	Q4 Tuning Q5 Tuning Q6 Tuning Input Level Level (To A3A1)		Check All Five Output Levels	7.7.1.1	L3 L4 L5 R1 R15	7.7.1.1	
A2A1 VCO	S S T	R28 R41 C8	21-20 MHz Level 2.1-2MHz Level Master Tuning	7.7.4.2 7.7.4.2			R28 R41 (C8)		
					VCO Accuracy	6.5.2	A16R2 5 Cal A16R3 FM Sens A16R4 FM Lin A16R5 10 Cal A16R6 0 Cal	7.6.5 7.6.6 7.6.6 7.6.5 7.6.5	
A2A2 100 Hz Decade	S S	R37 R50	12-12.6 MHz Level Output level	7.7.4.2 7.7.4.2	CSM-1 RF Output spurious, ±n x 100 kHz TP2 Waveform	6.5.5 7.7.4.2	R37 R50	7.7.4.2 7.7.4.2	All 9 positions of 100 Hz frequency switch
A2A3 1 kHz Decade	S S	R31 R50	12-12.6 MHz Level Output Level	7.7.4.3 7.7.4.3	CSM-1 RF Output, spurious, ±n x 100 kHz TP2 Waveform	6.5.5 7.7.4.3	R37 R50	7.7.4.3 7.7.4.3	All 9 positions of 1 kHz frequency switch
A2A4 10 kHz Decade	S S	R37 R50	12-12.6 MHz Level Output level	7.7.4.4 7.7.4.4	CSM-1 RF Output, spurious, ±n x 100 kHz, TP2 Waveform	6.5.5 7.7.4.4	R37 R50	7.7.4.4 7.7.4.4	All 9 positions of 10 kHz frequency switch
A3A1 Fixed Freq. Generator	S S S S S S S	L1,L2 L4 L6,L7 L9 L12,L13 L15 L24,L25 L27 L30 L34,L35 L37 L40,L41 L43	7.6 MHz Filter 12.4 MHz Filter 12 MHz Filter 12.6 MHz Filter 6 MHz Tuning 8 MHz Filter 12.2 MHz Filter	7.7.4.1 7.7.4.1 7.7.4.1 7.7.4.1 7.7.4.1 7.7.4.1 7.7.4.1	CSM-1 RF Output spurious, ±n x 100 kHz. All positions of 10 kHz frequency switch.	6.5.5	As Required	7.7.4.1	

Table 7-1. Module Adjustment and Replacement Cross Reference (Cont'd)

Module Function	Adjustments				Module Replacement Information				
	Type	Ref. Desig.	Description	Sect	Checks Suggested After Repl.	Sect	Possible Touch-Up Adjustments	Sect	Notes
	S	L55	6.3 MHz Tuning	7.7.4.1	Each Output	7.7.4.1			
	S	R3	7.6 MHz Level	7.7.4.1	Level May				
	S	R13	12.4 MHz Level	7.7.4.1	Be Checked				
	S	R32	12 MHz Level	7.7.4.1	with FET Probe				
	S	R54	2 MHz Level	7.7.4.1					
	S	R55	5 MHz Level	7.7.4.1					
	S	R64	12.6 MHz Level	7.7.4.1					
	S	R75	2.4 MHz Level	7.7.4.1					
	S	R76	6 MHz Level	7.7.4.1					
	S	R97	8 MHz Level	7.7.4.1					
	S	R112	12.2 MHz Level	7.7.4.1					
	S	R133	6.1 MHz Level	7.7.4.1					
	S	R147	4.2 MHz Level	7.7.4.1					
	S	R149	2.1 MHz Level	7.7.4.1					
	S	R154	6.3 MHz Level	7.7.4.1					
	S	R168	6.2 MHz Level	7.7.4.1					
A3A2	S	L9	8.4-8 MHz Tuning	7.7.4.5	Check Level and	7.7.4.5	L22	7.7.4.5	
100 kHz	S	L22	21-20 MHz Tuning	7.7.4.5	spurs (±n x 100kHz)		R54	7.7.4.5	
Decade	S	R23	8.4-8 MHz Level	7.7.4.5	at A3A3Z1				
	S	R54	21-20 MHz Level	7.7.4.5	X Port.				
	T	L6,L7 L8	8.4-8 MHz Filter						
	T	L17,L20 L18,L21 L19,L22	21-20 MHz Filter						
A3A3	S	C134	80-84 MHz Tuning	7.7.4.6	Check Level	7.7.4.6	(C134)	7.7.4.6	
1 MHz	S	L12	12-12.6 MHz Tuning	7.7.4	and spurs, at				
Decade	S	R45	60-63 MHz Level	7.7.4.6	A3J4 (A3A3Z2		R45	7.7.4.6	
	S	R62	120-126 MHz Level	7.7.4.6	R Port Output)		R62	7.7.4.6	
	S	R90	80-84 MHz Level	7.7.4.6			R90	7.7.4.6	
	T	C47,C54 C49,C55 C50,C59	60-63 MHz Filter						
	S	C66	60-63 MHz Tuning	7.7.4.6					
	T	C89,C91 C87,C93 C88,C94 C90	120-126 MHz Filter						
	T	C99	120-126 MHz Tuning						
	T	C115 C124 C118 C125 C120 C128	80-84 MHz Filter						
	S	C134	80-84 MHz Tuning	7.7.4.6					
A4A1	S	R30	200-210 MHz Gain	7.7.3.1	CSM-1 RF Output	7.7.3.1	A4A7R19	7.7.3.1	
Input Mixer	S	R49	110-130 MHz Gain	7.7.3.1	and spurious		A4A8R19	7.7.3.1	
and Diode	S	C27	200-210 MHz Tuning	7.7.3.1	±10 MHz, 90 MHz,		A4A1R49	7.7.3.1	
SW	S	C33	200-210 MHz Tuning	7.7.3.1	-20 MHz with				
	S	C39	200-210 MHz Tuning	7.7.3.1	CSM-1 at				
	S	C47	200-210 MHz Tuning	7.7.3.1	199.999 MHz				
	S	C71	110-130 MHz Tuning	7.7.3.1					

Table 7-1. Module Adjustment and Replacement Cross Reference (Cont'd)

Module Function	Adjustments				Module Replacement Information				
	Type	Ref. Desig.	Description	Sect	Checks Suggested After Repl.	Sect	Possible Touch-Up Adjustments	Sect	Notes
A4A2	S	C6	Q3 Drive	7.7.3.2	CSM-1 RF Output,	6.5.5	C6	7.7.3.2	
X 9 Mult	S	C8	Q3 Tuning	7.7.3.2	spurious ±10 MHz,		C8		
10→90 MHz	T	C12 C15 C19	90 MHz Filter		±90 MHz		(R19)		
	T	R19	90 MHz Level		Trapezoid waveform	7.7.3.7			
A4A3	S	C3	Q1 Tuning	7.7.3.2	CSM-1 RF Output	6.5.5	C3	7.7.3.2	
X 9 Mult	S	C7	Q2 Drive	7.7.3.2	and spurious				
90→180 MHz	S	C8	Q2 Tuning	7.7.3.2	±10 MHz, ±90 MHz				
	S	C11	Q3 Drive	7.7.3.2					
	S	C12	Q3 Tuning	7.7.3.2					
	S	C15	Q4 Drive	7.7.3.2					
	S	C16	Q4 Tuning	7.7.3.2					
	S	FL1	Cavity Filter	7.7.3.2					
A4A4	S	C1	Input Tuning	7.7.3.3	CSM-1 RF Output	6.5.5	C1	7.7.3.3	
940 - 920 MHz	T	L1C5 L2C2	Q1/Q2 Tuning						
Amplifier	T	L3C6 L4C3	Q2/Q3 Tuning						
	T	L5L6 C7	Q3 Tuning						
	S	C4	Output Tuning	7.7.3.3					
A4A5	P	R5	DC Level	7.6.7	CSM-1 RF Output	6.5.5			
AM Modula-	T	R24	Premodulation Level		and spurious	6.5.5			
tor & Diode	P	R9	Modulation Calib.	7.6.7	±10 MHz, ±90 MHz				
Switch	T	C37	Q8 Tuning						
A4A6	T	C6	Q3 Drive		CSM-1 RF Output	6.5.5	C8,C12,C15	7.7.3.4	10 MHz
X 7 X 2	S	C7	Q3 Tuning	7.7.3.4	and spurious.		C6	7.7.3.7	switch
Multiplier	S	C12	70 MHz Filter	7.7.3.4	Trapezoid waveform	7.7.3.7			at 0 and 1
10→70 MHz	S	C15	70 MHz Filter	7.7.3.4					
70→140 MHz	T	C18	70 MHz Filter						
	T	T1	Tap, Q5 Drive						
	T	C23	Q5 Tuning						
	T	C25, C28	140 MHz Filter						
A4A7	T	C6	Q3 Drive		CSM-1 RF Output	6.5.5	C8,C12,C15	7.7.3.4	10 MHz
X 8 X2	S	C8	Q3 Tuning	7.7.3.4	and spurious.		C6	7.7.3.7	switch
Multiplier	S	C12	80 MHz Filter	7.7.3.4	Trapezoid waveform	7.7.3.7			at 2 and 3
10→80 MHz	S	C15	80 MHz Filter	7.7.3.4					
80→160 MHz	T	C18	80 MHz Filter						
	T	T1	Tap, Q5 Drive						
	T	R19	80 MHz Level						
	T	C23	Q5 Tuning						
	T	C25, C28	160 MHz Filter						
A4A8	T	C6	Q3 Drive		CSM-1 RF Output	6.5.5	C8,C12,C15	7.7.3.4	10 MHz
X 9 X 2	S	C8	Q3 Tuning	7.7.3.4	spurious.		C6	7.7.3.7	switch at
Multiplier	S	C12	90 MHz Filter	7.7.3.4	Trapezoid waveform	7.7.3.7			4 and 5
10→90 MHz	S	C15	90 MHz Filter	7.7.3.4					
90→180 MHz	T	C18	90 MHz Filter						
	T	T1	Tap, Q5 Drive						
	T	R19	90 MHz Level						
	T	C23	Q5 Tuning						
	T	C25, C28	180 MHz Filter						

Table 7-1. Module Adjustment and Replacement Cross Reference (Cont'd)

Module Function	Adjustments				Module Replacement Information				
	Type	Ref. Desig.	Description	Sect	Checks Suggested After Repl.	Sect	Possible Touch-Up Adjustments	Sect	Notes
A4A9	T	C6	Q3 Drive		CSM-1 RF Output	6.5.5	C8,C12,C15	7.7.3.4	10 MHz
X10 X 2	S	C8	Q3 Tuning	7.7.3.4	and spurious ±10 MHz		C6	7.7.3.7	switch
Multiplier	S	C12	100 MHz Filter	7.7.3.4	Trapezoid waveform	7.7.3.7			at 6 and 7
10→100 MHz	S	C15	100 MHz Filter	7.7.3.4					
100→200 MHz	T	C18	100 MHz Filter						
	T	T1	Tap, Q5 Drive						
	T	C23	Q5 Tuning						
	T	C25, C28	200 MHz Filter						
A4A10	S	C6	Q3 Drive		CSM-1 RF Output	6.5.5	C8,C12,C15	7.7.3.4	10 MHz
X 11 X 2	S	C8	Q3 Tuning	7.7.3.4	and spurious		C6	7.7.3.7	switch at
Multiplier	S	C12	110 MHz Filter	7.7.3.4	±10 MHz				8 and 9
10→110 MHz	S	C15	110 MHz Filter	7.7.3.4	Trapezoid waveform	7.7.3.7			
110→220 MHz	T	C18	110 MHz Filter						
	T	T1	Tap, Q5 Drive						
	T	C23	Q5 Tuning						
	T	C25, C28	220 MHz Filter						
A4A11	T	C1	Q1 Input Tuning		CSM-1 RF Output	6.5.5			
Gain Control	T	C5	Q1 Output Tuning		level accuracy and	6.6.1			
Amplifier	T	C2	Q2 Input Tuning		spurious.				
	T	C6	Q2 Output Tuning						
	T	C3	Q3 Input Tuning						
	T	C7	Q3 Output Tuning						
	T	C4, C14, C15	700-800 MHz Filter						
A5A1	S	C6	Q3 Drive	7.7.3.6	CSM-1 RF Output,	6.5.5	R19,C18,C15	7.7.3.6	
Multiplier	S	C8	Q3 Tuning	7.7.3.6	spurs, ±90 MHz,		C12,C8,C6		
X 10	S	C12	Q4 Tuning	7.7.3.6	±110 MHz				
10→100 MHz	T	C15, C18	100 MHz Filter		Trapezoid waveform	7.7.3.7			
	S	R19	100 MHz Level	7.7.3.6					
A5A2	S	C1	100 MHz Tuning		CSM-1 RF Output	6.5.5			
Input	S	C5	100 MHz Tuning						
Diode Switch									
A5A3	T	C3	Q1 Tuning		CSM-1 RF Output	6.5.5	C8,C12,C15	7.7.3.5	100 MHz
Multiplier	T	C7	Q2 Input Tuning		and spurs:		FL1		switch
X8	S	C8	Q2 Output Tuning	7.7.3.5	n x 100 MHz				at 0
100→800 MHz	T	C11	Q3 Input Tuning						
	S	C12	Q3 Output Tuning	7.7.3.5					
	T	C15	Q4 Input Tuning						
	S	C16	Q4 Output Tuning	7.7.3.5					
	S	FL1	800 MHz Filter	7.7.3.5					

Table 7-1. Module Adjustment and Replacement Cross Reference (Cont'd)

Module Function	Adjustments				Module Replacement Information				
	Type	Ref. Desig.	Description	Sect	Checks Suggested After Repl.	Sect	Possible Touch-Up Adjustments	Sect	Notes
A5A4 Multiplier X9 100→900 MHz	T	C3	Q1 Tuning		CSM-1 RF Output and spurs, n x 100 MHz	6.5.5	C8,C12,C15 FL1	7.7.3.5	100 MHz switch at 1
	T	C7	Q2 Input Tuning						
	S	C8	Q2 Output Tuning						
	T	C11	Q3 Input Tuning						
	S	C12	Q3 Output Tuning	7.7.3.5					
	T	C15	Q4 Input Tuning						
	S	C16	Q5 Output Tuning	7.7.3.5					
	S	FL1	900 MHz Filter	7.7.3.5					
A5A5 Multiplier X10 100→1000 MHz	T	C3	Q1 Tuning		CSM-1 RF Output and spurs: n x 100 MHz	6.5.5	C8,C12,C16 FL1	7.7.3.5	100 MHz switch at 2
	T	C7	Q2 Input Tuning						
	S	C8	Q2 Output Tuning						
	T	C11	Q3 Input Tuning						
	S	C12	Q3 Output Tuning	7.7.3.5					
	T	C15	Q4 Input Tuning						
	S	C16	Q4 Output Tuning	7.7.3.5					
	S	FL1	1000 MHz Filter	7.7.3.5					
A5A6 Multiplier X 11 100→1100 MHz	T	C3	Q1 Tuning		CSM-1 RF Output and spurs: n x 100 MHz	6.5.5	C8,C12,C16 FL1	7.7.3.5	100 MHz switch at 3
	S	C8	Q2 Tuning						
	S	C12	Q3 Tuning	7.7.3.5					
	S	C16	Q4 Tuning	7.7.3.5					
	S	FL1	1100 MHz Filter	7.7.3.5					
A5A7 Multiplier X12 100→1200 MHz	T	C3	Q1 Tuning		CSM-1 RF Output and spurs: n x 100 MHz	6.5.5	C8,C12,C16 FL1	7.7.3.5	100 MHz switch at 4
	S	C8	Q2 Tuning						
	S	C12	Q3 Tuning	7.7.3.5					
	S	C16	Q4 Tuning	7.7.3.5					
	S	FL1	1200 MHz Tuning	7.7.3.5					
A5A8 Multiplier X 13 100→1300 MHz	T	C3	Q1 Tuning		CSM-1 RF Output and spurs: n x 100 MHz	6.5.5	C8,C12,C16 FL1	7.7.3.5	100 MHz switch at 5
	S	C8	Q2 Tuning						
	S	C12	Q3 Tuning	7.7.3.5					
	S	C16	Q4 Tuning	7.7.3.5					
	S	FL1	1300 MHz Filter	7.7.3.5					
A5A9 Output Diode Switch			None						
A5A10 Final BBA	T	C10	Q1 Tuning		CSM-1 RF Output Level Accuracy. AM Range	6.6.1	R39	7.6.3	
	T	C15	Q2 Tuning						
	T	C20	Q3 Tuning						
	P	R39	RF Output Level	7.6.3		6.6.5			
A6A1 Measure IF/AF	T	R2	Range Atten.		Frequency Meas. Range	6.7.1	R43	7.6.4	
	T	R39	100 MHz Level						
	P	R43	IF Gain	7.6.4					
	T	R90	Max Gain						
A6A2 Vert Amp	P	R10	Vert Gain	7.6.10	Vert. Freq. Response, sensitivity	6.9.1	R10	7.6.10	
A6A3 Horiz Amp	P	R15	10 Hz Sweep Freq.	7.6.9	Sweep Rate	6.6.9	R15	7.6.9	

Table 7-1. Module Adjustment and Replacement Cross Reference (Cont'd)

Module Function	Adjustments				Module Replacement Information				
	Type	Ref. Desig.	Description	Sect	Checks Suggested After Repl.	Sect	Possible Touch-Up Adjustments	Sect	Notes
A6A4 Audio OSC	P	R12	1 kHz Freq	7.6.8	OSC. Freq.	6.6.4	Frequency and Level	7.6.8	
	P	R13	400 Hz Freq	7.6.8					
	P	R14	1 kHz Level	7.6.8					
	P	R16	400 Hz Level	7.6.8					
A7 Power Supply	S	R3	Current Limit	7.7.5.2	+9 V	7.6.1	R10	7.6.1	
	P	R10	Voltage Set	7.6.1					
A8 HV Power Supply			None						
A16 0–100 Hz Control Assembly	P	R2	"5" Cal.	7.6.5	VCO Accuracy	6.5.1	R2,R3,R4 R5,R6	7.6.5	
	P	R3	FM Sensitivity	7.6.6					
	P	R4	FM Linearity	7.6.6					
	P	R5	"10" Cal	7.6.5					
	P	R6	"0" Cal	7.6.5					
A22A1	T	C8	Q2 Tuning		Frequency Meas. Range	6.7.1	L7	7.7.5.1	
	T	C16	Q4 Tuning						
	T	C24	Q6 Tuning						
	T	C25	Q6 Tuning						
	S	L7	Q7 Tuning	7.7.5.1					

Section VIII

REPLACEABLE PARTS

8.1 INTRODUCTION

This section includes all pertinent data necessary to locate, identify, and procure additional parts for the equipment. Parts are listed alpha-numerically by reference symbol and include all replaceable electronic items. Satisfactory replacement may be made with either the listed component or an exact replacement of the part(s) removed from the equipment.

8.2 ORDERING INFORMATION

The following instructions will aid in ordering parts:

a. Address all inquiries or orders to:

CUSTOMER SERVICE DEPARTMENT
SINGER INSTRUMENTATION
5340 Alla Road
Los Angeles, California 90066

b. Include the following information:

(1) Model and Serial Number of instrument.

(2) Singer Part Number.

(3) Reference Symbol Number.

(4) Description (as shown on Parts List).

8.3 PARTS LIST USE

The Table of Contents at the front of the manual lists the Parts List tables, related assemblies and location. The following paragraphs describe the use and meaning of the five columns included in the Parts Lists starting with Table 8-4.

a. Reference Designation, Column 1

The Reference Designation column contains an alphanumeric listing of parts as they appear on the equipment chassis, illustration, or schematic. The reference designation identifies the parts as to their component function in the instrument. Refer to Table 8-2 on reference symbols.

b. Singer Part Number, Column 2

The Singer Part Number column contains the part number as designated by the Singer Company.

c. Description, Column 3

The Description column contains the identification of component parts, including all pertinent specifications. When the description column is used for a reference symbol for which no part exists, "Not Used" is placed in the column. In these instances, columns 2, 4 and 5 are left blank. Refer to Table 8-3 on abbreviations that are used in the parts lists.

d. Manufacturer's Code Number, Column 4

The Manufacturer's Code Number column references the manufacturer by an assigned code number, as listed in Federal Supply Code Handbook H4-2. For manufacturers not listed in the Handbook, a letter code will be assigned. Table 8-1 includes the manufacturer and his code designation.

e. Manufacturer's Part Number, Column 5

The Manufacturer's Part Number shown contains the part number as designated by the manufacturer of the part.

Table 8-1. Code List of Manufacturers

The following code numbers are from the Federal Supply Code for Manufacturers Cataloging Handbook H4-2.

Code No.	Manufacturer	Address
00779	Amp, Inc.	Harrisburg, Pa.
00853	Sangamo Electric Co.	Pickens, S.C.
01121	Allen-Bradley Co.	Milwaukee, Wis.
02114	Ferroxcube Corp.	Saugerties, N.Y.
02735	RCA Semiconductor and Materials Div.	Sommerville, N.J.
03614	Bussmann Mfg.	Los Angeles, Calif.
03877	Transitron Electronic Corp.	Wakefield, Mass.
04062	Elmenco Products Co.	New York, N.Y.
04213	Caddell-Burns Mfg. Co., Inc.	Mineola, N.Y.
04713	Motorola, Inc., Semiconductor Prod. Div.	Phoenix, Ariz.
04946	Standard Wire and Cable Co.	Los Angeles, Calif.
05245	Corcom, Inc.	Chicago, Ill.
05375	Vari-L	Denver, Colo.
07109	Oaktron Industries, Inc.	Monroe, Wis.
09023	Cornell-Dubilier Electronics	Stanford, N.C.
11636	Kings Electronics Co.	Pasadena, Calif.
12406	Elpac, Inc.	Irvine, Calif.
12954	Dickson Electronics Corp.	Scottsdale, Ariz.
14655	Cornell-Dubilier Electronics	Newark, N.J.
14674	Corning Glass Works, Electronic Component Div.	Corning, N.Y.
15801	Fenwall Electronics	Farmingham, Mass
15912	Ansley Electronics Corp.	Los Angeles, Calif.
16508	Aerovox Corp., AVX Ceramic Div.	Myrtle Beach, S.C.
18324	Signetics Corp.	Sunnyvale, Calif.
19701	Electra/Midland Corp.	Mineral Wells, Texas
24602	EMC Technology, Inc.	Philadelphia, Pa.
24759	Lenox-Fugle Electronics, Inc.	So. Plainfield, N.J.
24931	Speciality Connector Co., Inc.	Indianapolis, Ind.
25403	Amperex Electronic Corp., Semiconductor and Microwave Div.	Slatersville, R.I.
27014	National Semiconductor Corp.	Santa Clara, Calif.
28480	Hewlett-Packard Co.	Palo Alto, Calif.
30043	Solid State Devices, Inc.	Santa Fe Springs, Calif.
31718	Fairchild Microwave and Optoelectronics	Palo Alto, Calif.
33062	Ferronics, Inc.	East Rochester, N.Y.
33095	Spectrum Control, Inc.	Fairview, Pa.
50273	American Power Devices, Inc.	Andover, Mass.
56289	Sprague Electric Co.	North Adams, Mass.
70371	America Lava Corp.	Chattanooga, Tenn.
71279	Cambridge Thermionic Corp.	Cambridge, Mass.
71450	CTS Corp.	Elkhart, Ind.
72136	Electro Motive Mfg. Co.	Willimantic, Conn.
72982	Erie Technological Products, Inc.	Erie, Pa.
73445	Amperex Electronics Co.	Hicksville, N.Y.
73899	J.F.D. Electronics Corp.	Brooklyn, N.Y.
75042	TRW Electronic Components, Inc.	Philadelphia, Pa.
75292	Kingwell Bros, Ltd.	San Francisco, Calif.

Table 8-1. Code List of Manufacturers (Cont.)

Code No.	Manufacturer	Address
76433	General Instrument Co.	Newark, N.J.
80031	Mepco/Electra, Inc.	Morristown, N.J.
81564	Artted Co., Inc.	Springfield, Mass.
82389	Switchcraft, Inc.	Chicago, Ill.
86684	RCA Corp. Electronic Components	Harrison, N.J.
88869	Singer Instrumentation	Los Angeles, Calif.
90201	Mallory Capacitor Co.	Indianapolis, Ind.
91203	Fuller, G.C., Mfg. Co., Inc.	Cincinnati, Ohio
91293	Johanson Mfg. Co.	Boonton, N.J.
95121	Quality Components, Inc.	St. Marys, Pa.
98291	Sealectro Corp.	Mamaroneck, N.Y.
0000A*	Sprague-Goodman Electronics, Inc.	Mineola, N.Y.

*This vendor has no number assigned in the latest supplement to the Federal Supply Code for Manufacturers Cataloging Handbook H4-2.

Table 8-2. Reference Designators

A	Assembly	P	Plug, Connector
AR	Amplifier	Q	Transistor
AT	Attenuator/Isolator	R	Resistor
C	Capacitor	RT	Thermistor
CP	Adaptor	S	Switch
CR	Diode	T	Transformer
DS	Lamp	U	Integrated Circuit
F	Fuse	W	Cable
FL	Filter	Y	Crystal
J	Jack, Connector	Z	Miscellaneous Parts:
K	Relay		
L	Inductor		Mixer Modulator
LS	Loud Speaker		

Table 8-3. Abbreviations

A	Ampere	%	±% if sign not shown
dc	Direct Current		
Desig.	Designator		Pico (10^{-12})
k	Thousand	pF	Picofarad
m	Milli (10^{-3})	Ref.	Reference
mA	Milliampere	RF	Radio Frequency
Mfr.	Manufacturer	V	Volt
No.	Number	W	Watts
P/O	Part of	μ	Micro (10^{-6})
		μF	Microfarads
		μH	Microhenry

Table 8-4. Parts List for Main Assemblies and Chassis

Ref. Desig.	Singer Part No.	Description	Mfr. Code No.	Mfr. Part No.
A1	4-005178-001	Assembly, 10 MHz Buffer	88869	
A2	4-005182-001	Assembly, Interconnect	88869	
A3	4-005184-001	Assembly, Interconnect	88869	
A4	4-005186-001	Assembly, Interconnect	88869	
A5	4-005188-001	Assembly, Interconnect	88869	
A6	4-005192-001	Assembly, Mother Board	88869	
A7	4-005197-001	Assembly, Power Supply	88869	
A8	4-005198-001	Assembly, High Voltage Power Supply	88869	
A9	3-005486-001	Assembly, 10 MHz Switch	88869	
A10	3-005263-001	Assembly, 100 MHz Switch	88869	
A11	3-005265-001	Assembly, 1 MHz Switch	88869	
A12	3-005266-001	Assembly, 0.1 kHz Frequency Switch	88869	
A13	3-005266-001	Assembly, 1 kHz Frequency Switch	88869	
A14	3-005266-001	Assembly 10 kHz Frequency Switch	88869	
A15	3-005266-001	Assembly, 100 kHz Frequency Switch	88869	
A16	3-005267-001	Assembly, 0-100 Hz Potentiometer	88869	
A17	3-005268-001	Assembly, Vertical Position/Gain Potentiometer-Horizontal Position/Gain Potentiometer	88869	
A18	3-005269-001	Assembly, Focus/Intensity and Sweep Mode/Sweep Rate	88869	
A19	3-005270-001	Assembly, Vertical Mode/Carrier Level and Sweep Width	88869	
A20	3-005271-001	Assembly, Tone Frequency/Tone Level Amplitude Modulator Switch	88869	
A21	3-005272-001	Assembly, Function Switch, Audio Mode/Volume Switch Potentiometer	88869	
A22	4-005404-001	Assembly, Interconnect	88869	
AT1	3-403838-001	Attenuator, step, 0-100 dB in 10 dB steps	88869	
AT2	1-404118-001	Attenuator, step, 0-10 dB in 1 dB steps	88869	
C1	1-900073-005	Capacitor, fixed, electrolytic, 9000 μF, +75% - 10%, 25 V dc	90201	CG902U025R2L3PH
C2	1-900073-005	Capacitor, fixed, electrolytic, 9000 μF, +75% - 10%, 25 V dc	90201	CG902U025R2L3PH
C3	1-900001-017	Capacitor, fixed, plastic, 0.22 μF, ±20%, 250 V dc	73445	C280AE, 0.22μF
C4	1-900115-010	Capacitor, fixed, tantalum, 150 μF, ±20%, 15 V dc	12954	D150GS1D15M
C5	1-900038-001	Capacitor, fixed, feed-thru, 0.001 μF, +100% - 0%, 500 V dc	01121	FB2B-102W
C6	1-900038-001	Capacitor, fixed, feed-thru, 0.001 μF, +100% - 0%, 500 V dc	01121	FB2B-102W
C7	1-900038-001	Capacitor, fixed, feed-thru, 0.001 μF, + 100% - 0%, 500 V dc	01121	FB2B-102W
C8	1-900038-001	Capacitor, fixed, feed-thru, 0.001 μF, +100% - 0%, 500 V dc	01121	FB2B-102W

Table 8-4. Parts List for Main Assemblies and Chassis (Cont.)

Ref. Desig.	Singer Part No.	Description	Mfr. Code No.	Mfr. Part No.
C9	1-900038-001	Capacitor, fixed, feed-thru 0.001 μF, +100% -0%, 500 V dc	01121	FB2B-102W
C10	1-900038-001	Capacitor, fixed, feed-thru 0.001 μF, +100% -0%, 500 V dc	01121	FB2B-102W
C11	1-900038-001	Capacitor, fixed, feed-thru 0.001 μF, +100% -0%, 500 V dc	01121	FB2B-102W
C12	1-900038-001	Capacitor, fixed, feed-thru 0.001 μF, +100% -0%, 500 V dc	01121	FB2B-102W
C13	1-900038-001	Capacitor, fixed, feed-thru 0.001 μF, +100% -0%, 500 V dc	01121	FB2B-102W
C14	1-900057-181	Capacitor, fixed, tantalum 22 μF, ±20%, 15 V dc	56289	150D226X0015B2
CR1	1-913095-001	Diode, bridge rectifier, Vr = 200 V, If = 12.5A	30043	SDA130C
DS1	3-005376-001	Indicator lamp assembly, green lens	88869	
DS2	3-005376-002	Indicator lamp assembly, red lens	88869	
F1	1-924000-019	Fuse, slo-blo, 1.0A, 250 V	03614	MDL-1A
J1	1-910330-001	Connector, power, fused and filtered	05245	6J4
J2		Connector, jack, consisting of:		
	1-910335-004	Connector, jack, housing	00779	350781-1
	1-910337-001	Contact, 6 pins	00779	350218-1
J3	1-910006-001	Connector, jack, phone	82389	12A
J4	1-910152-001	Connector, jack, phone	82389	S-13B
J5	1-910043-001	Connector, jack, BNC	11636	KC19-68
J6	1-910043-001	Connector, jack, BNC	11636	KC19-68
J7	1-910043-001	Connector, jack, BNC	11636	KC19-68
J8	1-910043-001	Connector, jack, BNC	11636	KC19-68
J9	1-910043-001	Connector, jack, BNC	11636	KC19-68
J10	1-910043-001	Connector, jack, BNC	11636	KC19-68
J11	1-910043-001	Connector, jack, BNC	11636	KC19-68
J12		Connector, jack, consisting of:		
	1-910336-003	Connector, housing, 4 circuit	00779	350779-1
	1-900338-001	Connector, contact, 4 socket	00779	350536-1
J13		Connector, jack, consisting of:		
	1-910336-001	Connector, housing, 2 circuit	00779	350777-1
	1-900338-001	Connector, contact, 2 socket	00779	350536-1
J14		Connector, jack, consisting of:		
	1-910336-001	Connector, housing, 2 circuit	00779	350777-1
	1-900338-001	Connector, contact, 2 socket	00779	350536-1
L1	1-906007-003	Inductor, fixed, 1 mH	04213	670-3
L2	1-906007-003	Inductor, fixed, 1 mH	04213	670-3
LS1	1-936004-001	Loud Speaker	07109	T2806
Q1	1-958039-001	Transistor, silicon, NPN	04713	2N3055
R1	1-945000-169	Resistor, fixed, composition, 2 kilohm, ±5%, 1/4 W	01121	CB2025

Table 8-4. Parts List for Main Assemblies and Chassis (Cont.)

Ref. Desig.	Singer Part No.	Description	Mfr. Code No.	Mfr. Part No.
S1	1-951024-002	Switch, push-push, 2 poles, 2 positions	82389	65017-206
T1	1-403868-001	Transformer, power, 120 V/240 V primary, 6.3 V/16 V secondary	88869	
U1	1-926038-002	Integrated circuit, voltage regulator	27014	LM309K
V1	1-917016-001	Electron tube, cathode ray	86684	3RP1
W1	1-999014-001	Cable, semi-rigid, coax, 11.6 in.	04946	RG-8A/U
W2	1-999014-001	Cable, semi-rigid, coax, 11.6 in.	04946	RG-8A/U
W3	2-005352-001	Cable assembly, coaxial, 4.75 in.	88869	
W4	2-005352-002	Cable assembly, coaxial, 4.75 in.	88869	
W5	2-005353-027	Cable assembly, coaxial, 16.8 in.	88869	
W6	2-005353-024	Cable assembly, coaxial, 12.6 in.	88869	
W7	2-005353-024	Cable assembly, coaxial, 12.6 in.	88869	
W8	2-005353-025	Cable assembly, coaxial, 13.6 in.	88869	
W9	2-005353-022	Cable assembly, coaxial, 10.4 in.	88869	
W10	2-005353-026	Cable assembly, coaxial, 14.4 in.	88869	
W11	2-005353-021	Cable assembly, coaxial, 8.8 in.	88869	
W12	2-005353-022	Cable assembly, coaxial, 10.4 in.	88869	
W13	2-005353-023	Cable assembly, coaxial, 12.2 in.	88869	
W14	2-005353-029	Cable assembly, coasial, 26.2 in.	88869	
W15	2-005353-028	Cable assembly, coaxial, 17.8 in.	88869	
W16	1-999000-210	Wire, stranded, 22 gauge	04946	MIL-W-16878
W17	1-999000-210	Wire, stranded, 22 gauge	04946	MIL-W-16878
W18	4-005362-001	Wire harness assembly, coaxial	88869	
W19	2-005353-020	Cable assembly, coaxial, 20.5 in.	88869	
W20	2-005353-019	Cable assembly, coaxial, 17 in.	88869	
W21	2-005353-018	Cable assembly, coaxial, 20.5 in.	88869	
W22	2-005353-017	Cable assembly, coaxial, 19.5 in.	88869	
W23	2-005353-016	Cable assembly, coaxial, 18 in.	88869	
W24	1-999000-209	Wire, stranded, 22 gauge	04946	MIL-W-16878
W25	4-005375-001	Wire harness assembly, coaxial	88869	
W26	2-005348-001	Cable assembly, ribbon, 9.2 in.	88869	
W27	2-005350-001	Cable assembly, coaxial, 4 in.	88869	
W28	2-005353-004	Cable assembly, coaxial, 7.5 in.	88869	
W29	2-005353-005	Cable assembly, coaxial, 7.5 in.	88869	
W30	2-005353-006	Cable assembly, coaxial, 7.5 in.	88869	
W31	2-005353-007	Cable assembly, coaxial, 6 in.	88869	
W32	2-005353-009	Cable assembly, coaxial, 7 in.	88869	
W33	2-005353-008	Cable assembly, coaxial, 5 in.	88869	
W34	2-005353-011	Cable assembly, coaxial, 12 in.	88869	
W35	2-005353-010	Cable assembly, coaxial, 8 in.	88869	
W36	2-005353-012	Cable assembly, coaxial, 8.5 in.	88869	
W37	2-005353-014	Cable assembly, coaxial, 6.5 in.	88869	
W38	2-005353-013	Cable assembly, coaxial, 10.5 in.	88869	
W39	2-005353-015	Cable assembly, coaxial, 5.5 in.	88869	
W40	2-005353-030	Cable assembly, coaxial, 6 in.	88869	
W41	2-005487-001	Cable assembly, coaxial	88869	
Y1	1-402838-003	TXCO, 10 MHz	88868	

Table 8-5. Parts List for 10 MHz Buffer Assembly, A1

Ref. Desig.	Singer Part No.	Description	Mfr. Code No.	Mfr. Part No.
C1	1-900077-002	Capacitor, fixed, ceramic, 0.01 μF, ±20%, 100 V dc	56289	TG-S10
C2	1-900001-013	Capacitor, fixed, plastic, 0.1 μF, ±20%, 250 V dc	73445	C280AE, 0.1μF
C3	1-900098-031	Capacitor, fixed, mica, 100 pF, ±5%, 300 V dc	04062	DM5FC101J
C4	1-900098-043	Capacitor, fixed, mica, 330 pF, ±5%, 50 V dc	04062	DM5FY331J
C5	1-900098-031	Capacitor, fixed, mica, 100 pF, ± 5%, 300 V dc	04062	DM5FC101J
C6	1-900077-002	Capacitor, fixed, ceramic, 0.01 μF, ±20%, 100 V dc	56289	TG-S10
C7	1-900077-002	Capacitor, fixed, ceramic, 0.01 μF, ±20%, 100 V dc	56289	TG-S10
C8	1-900001-013	Capacitor, fixed, plastic, 0.1 μF, ±20%, 250 V dc	73445	C280AE, 0.1μF
C9	1-900001-013	Capacitor, fixed, plastic, 0.1 μF, ±20%, 250 V dc	73445	C280AE, 0.1μF
C10	1-900077-002	Capacitor, fixed, ceramic, 0.01 μF, ±20%, 100 V dc	56289	TG-S10
C11	1-900001-013	Capacitor, fixed, plastic, 0.1 μF, ±20%, 250 V dc	73445	C280AE, 0.1μF
C12	1-900098-038	Capacitor, fixed, mica, 200 pF, ±5%, 100 V dc	04062	DM5FA201J
C13	1-900072-043	Capacitor, fixed, mica, 1200 pF, ±5%, 100 V dc	00853	D10SID122J0
C14	1-900077-002	Capacitor, fixed, ceramic, 0.01 μF, ±20%, 100 V dc	56289	TG-S10
C15	1-900001-013	Capacitor, fixed, plastic, 0.1 μF, ±20%, 250 V dc	73445	C280AE, 0.1μF
C16	1-900098-038	Capacitor, fixed, mica, 200 pF, ±5%, 100 V dc	04062	DM5FA201J
C17	1-900072-041	Capacitor, fixed, mica, 1000 pF, ±5%, 100 Vdc	00853	D10S1D102J0
C18	1-900077-002	Capacitor, fixed, ceramic, 0.01 μF, ±20%, 100 V dc	56289	TG-S10
C19	1-900001-013	Capacitor, fixed, plastic, 0.1 μF, ±20%, 250 V dc	73445	C280AE, 0.1μF
C20	1-900098-038	Capacitor, fixed, mica, 200 pF, ±5%, 100 V dc	04062	DM5FA201J
C21	1-900072-043	Capacitor, fixed, mica, 1200 pF, ±5%, 100 V dc	00853	D10S1D122J0
C22	1-900001-013	Capacitor, fixed, plastic, 0.1 μF, ±20%, 250 V dc	73445	C280AE, 0.1μF
C23	1-900001-013	Capacitor, fixed, plastic, 0.1 μF, ±20%, 250 V dc	73445	C280AE, 0.1μF
J1A	1-910331-001	Connector, jack, 1 pin	71279	450-3756-02-06
J1B	1-910331-001	Connector, jack, 1 pin	71279	450-3756-02-06

Table 8-5. Parts List for 10 MHz Buffer Assembly, A1 (Cont.)

Ref. Desig.	Singer Part No.	Description	Mfr. Code No.	Mfr. Part No.
J1C	1-910331-001	Connector, jack, 1 pin	71279	450-3756-02-06
J2	556-205-001	Connector, jack, SMB	98291	51-051-000
J3	556-205-001	Connector, jack, SMB	98291	51-051-000
J4	556-205-001	Connector, jack, SMB	98291	51-051-000
J5	556-205-001	Connector, jack, SMB	98291	51-051-000
J6	556-205-001	Connector, jack, SMB	98291	51-051-000
J7	1-910029-002	Connector, jack, 1 pin	00779	61182-2
J8	1-910029-002	Connector, jack, 1 pin	00779	61182-2
L1	1-906043-018	Inductor, fixed, 2.7 μH, ±10%, 595 mA	81564	4018
L2	1-906043-018	Inductor, fixed, 2.7 μH, ±10%, 595 mA	81564	4018
L3	2-403855-002	Inductor, variable, 1.28 μH to 1.73 μH	88869	
L4	2-403855-002	Inductor, variable, 1.28 μH to 1.73 μH	88869	
L5	2-403855-002	Inductor, variable, 1.28 μH to 1.73 μH	88869	
L6	132-0377-001	Inductor, fixed, 7 turns	88869	
Q1	1-958000-001	Transistor, silicon, NPN	04713	2N3904-5
Q2	1-958000-001	Transistor, silicon, NPN	04713	2N3904-5
Q3	1-958000-001	Transistor, silicon, NPN	04713	2N3904-5
Q4	1-958000-001	Transistor, silicon, NPN	04713	2N3904-5
Q5	1-958000-001	Transistor, silicon, NPN	04713	2N3904-5
Q6	1-958000-001	Transistor, silicon, NPN	04713	2N3904-5
R1	1-945160-107	Resistor, variable, cermet, 5 kilohm, ±20%, 1/4 W	32997	3352W502
R2	1-945027-297	Resistor, fixed, film, 12.1 kilohm, ±1%, 1/8 W	14674	RN55-D-1212F
R3	1-945027-097	Resistor, fixed, film, 100 ohm, ±1%, 1/8 W	14674	RN55-D-1000F
R4	1-945027-253	Resistor, fixed, film, 4.22 kilohm, ±1%, 1/8 W	14674	RN55-D-4221F
R5	1-945027-097	Resistor, fixed, film, 100 ohm, ±1%, 1/8 W	14674	RN55-D-1000F
R6	1-945027-135	Resistor, fixed, film, 249 ohm, ±1%, 1/8 W	14674	RN55-D-2490F
R7	1-945027-126	Resistor, fixed, film, 200 ohm, ±1%, 1/8 W	14674	RN55-D-2000F
R8	1-945027-126	Resistor, fixed, film, 200 ohm, ±1%, 1/8 W	14674	RN55-D-2000F
R9	1-945027-126	Resistor, fixed, film, 200 ohm, ±1%, 1/8 W	14674	RN55-D-2000F
R10	1-945027-097	Resistor, fixed, film, 100 ohm, ±1%, 1/8 W	14674	RN55-D-1000F

Table 8-5. Parts List for 10 MHz Buffer Assembly, A1 (Cont.)

Ref. Desig.	Singer Part No.	Description	Mfr. Code No.	Mfr. Part No.
R11	1-945027-268	Resistor, fixed, film, 6.04 kilohm, ±1%, 1/8 W	14674	RN55-D-6041F
R12	1-945027-239	Resistor, fixed, film, 3.01 kilohm, ±1%, 1/8 W	14674	RN55-D-3011F
R13	1-945027-097	Resistor, fixed, film. 100 ohm, ±1%, 1/8 W	14674	RN55-D-1000F
R14	1-945027-097	Resistor, fixed, film, 100 ohm, ±1%, 1/8 W	14674	RN55-D-1000F
R15	1-945160-102	Resistor, variable, cermet, 200 ohm, ±20%, 1/4 W	32997	3352E201
R16	1-945027-097	Resistor, fixed, film, 100 ohm, ±1%, 1/8 W	14674	RN55-D-1000F
R17	1-945027-097	Resistor, fixed, film, 100 ohm, ±1%, 1/8 W	14674	RN55-D-1000F
R18	1-945027-130	Resistor, fixed, film, 221 ohm, ±1%, 1/8 W	14674	RN55-D-2210F
R19	1-945027-164	Resistor, fixed, film, 499 ohm, ±1%, 1/8 W	14674	RN55-D-4990F
R20	1-945027-097	Resistor, fixed, film, 100 ohm, ±1%, 1/8 W	14674	RN55-D-1000F
R21	1-945027-287	Resistor, fixed, film, 9.53 kilohm, ±1%, 1/8 W	14764	RN55-D-9531F
R22	1-945027-251	Resistor, fixed, film, 4.02 kilohm, ±1%, 1/8 W	14674	RN55-D-4021F
R23	1-945027-115	Resistor, fixed, film, 154 ohm, ±1%, 1/8 W	14674	RN55-D-1540F
R24	1-945027-164	Resistor, fixed, film, 499 ohm, ±1%, 1/8 W	14674	RN55-D-4490F
R25	1-945027-097	Resistor, fixed, film, 100 ohm, ±1%, 1/8 W	14674	RN55-D-1000F
R26	1-945027-269	Resistor, fixed, film, 6.19 kilohm, ±1%, 1/8 W	14674	RN55-D-6191F
R27	1-945027-249	Resistor, fixed, film, 3.83 kilohm, ±1%, 1/8 W	14674	RN55-D-3831F
R28	1-945027-097	Resistor, fixed, film, 100 ohm, ±1%, 1/8 W	14674	RN55-D-1000F
R29	1-945027-164	Resistor, fixed, film, 499 ohm, ±1%, 1/8 W	14674	RN55-D-4990F
R30	1-945027-097	Resistor, fixed, film, 100 ohm, ±1%, 1/8 W	14674	RN55-D-1000F
R31	1-945027-287	Resistor, fixed, film, 9.53 kilohm, ±1%, 1/8 W	14674	RN55-D-9531F
R32	1-945027-251	Resistor, fixed, film, 4.02 kilohm, ±1%, 1/8 W	14674	RN55-D-4021F
R33	1-945027-115	Resistor, fixed, film, 154 ohm, ±1%, 1/8 W	14674	RN55-D-1540F

Table 8-6. Parts List for Interconnect Assembly, A2

Ref. Desig.	Singer Part No.	Description	Mfr. Code No.	Mfr. Part No.
A2A1	4-004993-001	Assembly, VCO, 2.1-2.0 MHz and 21-20 MHz	88869	
A2A2	4-005011-001	Assembly, 0.1 kHz Decade	88869	
A2A3	4-005011-001	Assembly, 1.0 kHz Decade	88869	
A2A4	4-005011-001	Assembly, 10 kHz Decade	88869	
J1	1-403946-001	Connector, jack, 10 pin	88869	
J2	1-403946-001	Connector, jack, 10 pin	88869	
J3	1-403946-001	Connector, jack, 10 pin	88869	
J4	1-403946-001	Connector, jack, 10 pin	88869	
J5	556-205-001	Connector, jack, SMB	98291	51-051-000
J6	556-205-001	Connector, jack, SMB	98291	51-051-000
J7		Connector, jack, solder point		
J8		Connector, jack, solder point		
W1	2-202641-001	Cable assembly, semi-rigid coax, 6.8 in.	88869	
W2	2-202642-001	Cable assembly, semi-rigid coax, 4.3 in.	88869	
W3	2-202642-001	Cable assembly, semi-rigid coax, 4.3 in.	88869	
W4	2-202643-001	Cable assembly, semi-rigid coax, 8 in.	88869	
W5	2-202643-001	Cable assembly, semi-rigid coax, 8 in.	88869	
W6	2-202642-001	Cable assembly, semi-rigid coax, 4.3 in.	88869	
W7	2-202642-001	Cable assembly, semi-rigid coax, 4.3 in.	88869	
W8	2-202642-001	Cable assembly, semi-rigid coax, 4.3 in.	88869	
W9	2-202642-001	Cable assembly, semi-rigid coax, 4.3 in.	88869	
W10	2-202642-001	Cable assembly, semi-rigid coax, 4.3 in.	88869	
W11	2-202642-001	Cable assembly, semi-rigid coax, 4.3 in.	88869	
W12	2-202642-001	Cable assembly, semi-rigid coax, 4.3 in.	88869	
W13	2-202642-001	Cable assembly, semi-rigid coax, 4.3 in.	88869	
W14	2-202642-001	Cable assembly, semi-rigid coax, 4.3 in.	88869	
W15	2-202642-001	Cable assembly, semi-rigid coax, 4.3 in.	88869	
W16	2-202642-001	Cable assembly, semi-rigid coax, 4.3 in.	88869	
W17	2-202642-001	Cable assembly, semi-rigid coax, 4.3 in.	88869	
W18	2-202642-001	Cable assembly, semi-rigid coax, 4.3 in.	88869	
W19	2-202642-001	Cable assembly, semi-rigid coax, 4.3 in.	88869	
W20	2-202642-001	Cable assembly, semi-rigid coax, 6.7 in.	88869	
W21	2-202645-001	Cable assembly, semi-rigid coax, 9.4 in.	88869	
W22	1-999000-202	Wire, stranded, 22 gauge	04946	MIL-W-16878
W23	1-999000-205	Wire, stranded, 22 gauge	04946	MIL-W-16878
W24	1-999000-202	Wire, stranded, 22 gauge	04946	MIL-W-16878
W25	1-999000-205	Wire, stranded, 22 gauge	04946	MIL-W-16878
W26	1-999000-202	Wire, stranded, 22 gauge	04946	MIL-W-16878
W27	1-999000-205	Wire, stranded, 22 gauge	04946	MIL-W-16878
XA2A1J1		Connector, jack, consisting of:		
	1-900079-003	Capacitor, fixed, feed-thru, 470 pF, +100% - 0%, 300 V dc	01121	FW5N-471P
	1-910301-001	Connector, contact, 1 pin	00779	86090-3
XA2A1J2	1-403946-001	Connector, jack, 5 pin	88869	
XA2A1J3	1-403946-001	Connector, jack, 5 pin	88869	

Table 8-6. Parts List for Interconnect Assembly, A2 (Cont.)

Ref. Desig.	Singer Part No.	Description	Mfr. Code No.	Mfr. Part No.
XA2A1J4		Connector, jack, consisting of:		
	1-900079-003	Capacitor, fixed, feed-thru, 470 pF, +100% -0%, 300 V dc	01121	FW5N-471P
	1-910301-001	Connector, contact, 1 pin	00779	86090-3
XA2A1J5	1-403946-001	Connector, jack, 5 pin	88869	
XA2A1J6	1-403946-001	Connector, jack, 5 pin	88869	
XA2A1J7		Connector, jack, consisting of:		
	1-900079-003	Capacitor, fixed, feed-thru, 470 pF, +100% -0%, 300 V dc	01121	FW5N-471P
	1-910301-001	Connector, contact, 1 pin	00779	86090-3
XA2A1J8		Connector, jack, consisting of:		
	1-900079-003	Capacitor, fixed, feed-thru, 470 pF, +100% -0%, 300 V dc	01121	FW5N-471P
	1-910301-001	Connector, contact, 1 pin	00779	86090-3
XA2A1J9		Connector, jack, consisting of:		
	1-900079-003	Capacitor, fixed, feed-thru, 470 pF, +100% -0%, 300 V dc	01121	FW5N-471P
	1-910301-001	Connector, contact, 1 pin	00779	86090-3
XA2A2J1		Connector, jack, consisting of:		
	1-900079-003	Capacitor, fixed, feed-thru, 470 pF, +100% -0%, 300 V dc	01121	FW5N-471P
	1-910301-001	Connector, contact, 1 pin	00779	86090-3
XA2A2J2		Connector, jack, consisting of:		
	1-900079-003	Capacitor, fixed, feed-thru, 470 pF, +100% -0%, 300 V dc	01121	FW5N-471P
	1-910301-001	Connector, contact, 1 pin	00779	86090-3
XA2A2J3	1-403946-001	Connector, contact, 5 pin	88869	
XA2A2J4		Connector, jack, consisting of:		
	1-900079-003	Capacitor, fixed, feed-thru, 470 pF, +100% -0%, 300 V dc	01121	FW5N-471P
	1-910301-001	Connector, contact, 1 pin	00779	86090-3
XA2A2J5	1-403946-001	Connector, jack, 5 pin	88869	
XA2A2J6		Connector, jack, consisting of:		
	1-900079-003	Capacitor, fixed, feed-thru, 470 pF, +100% -0%, 300 V dc	01121	FW5N-471P
	1-910301-001	Connector, contact, 1 pin	00779	86090-3
XA2A2J7	1-403946-001	Connector, jack, 5 pin	88869	
XA2A2J8		Connector, jack, consisting of:		
	1-900079-003	Connector, fixed, feed-thru, 470 pF, +100% -0%, 300 V dc	01121	FW5N-471P
	1-910301-001	Connector, contact, 1 pin	07799	86090-3
XA2A2J9	1-403946-001	Connector, jack, 5 pin	88869	

Table 8-6. Parts List for Interconnect Assembly, A2 (Cont.)

Ref. Desig.	Singer Part No.	Description	Mfr. Code No.	Mfr. Part No.
XA2A2J10		Connector, jack, consisting of:		
	1-900079-003	Capacitor, fixed, feed-thru, 470 pF, +100% -0%, 300 V dc	01121	FW5N-471P
	1-910301-001	Connector, contact, 1 pin	00779	86090-3
XA2A2J11	1-403946-001	Connector, jack, 5 pin	88869	
XA2A2J12		Connector, jack, consisting of:		
	1-900079-003	Capacitor, fixed, feed-thru, 470 pF, +100% -0%, 300 V dc	01121	FW5N-471P
	1-910301-001	Connector, contact, 1 pin	00779	86090-3
XA2A2J13	1-403946-001	Connector, jack, 5 pin	88869	
XA2A2J14		Connector, jack, consisting of:		
	1-900079-003	Capacitor, fixed, feed-thru, 470 pF, +100% -0%, 300 V dc	01121	FW5N-471P
	1-910301-001	Connector, contact, 1 pin	00779	86090-3
XA2A2J15	1-403946-001	Connector, jack, 5 pin	88869	
XA2A2J16		Connector, jack, consisting of:		
	1-900079-003	Capacitor, fixed, feed-thru, 470 pF, +100% -0%, 300 V dc	01121	FW5N-471P
	1-910301-001	Connector, contact, 1 pin	00779	86090-3
XA2A2J17	1-403946-001	Connector, jack, 5 pin	88869	
XA2A2J18		Connector, jack, consisting of:		
	1-900079-003	Capacitor, fixed, feed-thru, 470 pF, +100% -0%, 300 V dc	01121	FW5N-471P
	1-910301-001	Connector, contact, 1 pin	00779	86090-3
XA2A2J19	1-403946-001	Connector, jack, 5 pin	88869	
XA2A2J20	1-403946-001	Connector, jack, 5 pin	88869	
XA2A3J1		Connector, jack, consisting of:		
	1-900079-003	Capacitor, fixed, feed-thru, 470 pF, +100% -0%, 300 V dc	01121	FW5N-471P
	1-910301-001	Connector, contact, 1 pin	00779	86090-3
XA2A3J2		Connector, jack, consisting of:		
	1-900079-003	Capacitor, fixed, feed-thru, 470 pF, +100% -0%, 300 V dc	01121	FW5N-471P
	1-910301-001	Connector, contact, 1 pin	00779	86090-3
XA2A3J3	1-403946-001	Connector, jack, 5 pin	88869	
XA2A3J4		Connector, jack, consisting of:		
	1-900079-003	Capacitor, fixed, feed-thru, 470 pF, +100% -0%, 300 V dc	01121	FW5N-471P
	1-910301-001	Connector, contact, 1 pin	00779	86090-3
XA2A3J5	1-403946-001	Connector, jack, 5 pin	88869	
XA2A3J6		Connector, jack, consisting of:		
	1-900079-003	Capacitor, fixed, feed-thru 470 pF, +100% -0%, 300 V dc	01121	FW5N-471P

Table 8-6. Parts List for Interconnect Assembly, A2 (Cont.)

Ref. Desig.	Singer Part No.	Description	Mfr. Code No.	Mfr. Part No.
	1-910301-001	Connector, contact, 1 pin	00779	86090-3
XA2A3J7	1-403946-001	Connector, jack, 5 pin	88869	
XA2A3J8		Connector, jack, consisting of:		
	1-900079-003	Capacitor, fixed, feed-thru 470 pF, +100% -0%, 300 V dc	01121	FW5N-471P
	1-910301-001	Connector, contact, 1 pin	00779	86090-3
XA2A3J9	1-403946-001	Connector, jack 5 pin	88869	
XA2A3J10		Connector, jack, consisting of:		
	1-900079-003	Capacitor, fixed, feed-thru, 470 pF, +100% -0%, 300 V dc	01121	FW5N-471P
	1-910301-001	Connector, contact, 1 pin	00779	86090-3
XA2A3J11	1-403946-001	Connector, jack, 5 pin	88869	
XA2A3J12		Connector, jack, consisting of:		
	1-900079-003	Capacitor, fixed, feed-thru, 470 pF, +100% -0%. 300 V dc	01121	FW5N-471P
	1-910301-001	Connector, contact, 1 pin	00779	86090-3
XA2A3J13	1-403946-001	Connector, jack, 5 pin	88869	
XA2A3J14		Connector, jack, consisting of:		
	1-900079-003	Capacitor, fixed, feed-thru, 470 pF, +100%, -0%, 300 V dc	01121	FW5N-471P
	1-910301-001	Connector, contact, 1 pin	00779	86090-3
XA2A3J15	1-403946-001	Connector, jack, 5 pin	88869	
XA2A3J16		Connector, jack, consisting of:		
	1-900079-003	Capacitor, fixed, feed-thru, 470 pF, +100% -0%, 300 V dc	01121	FW5N-471P
	1-910301-001	Connector, contact, 1 pin	00779	86090-3
XA2A3J17	1-403946-001	Connector, jack, 5 pin	88869	
XA2A3J18		Connector, jack, consisting of:		
	1-900079-003	Capacitor, fixed, feed-thru, 470 pF, +100% -0%, 300 V dc	01121	FW5N-471P
	1-910301-001	Connector, contact, 1 pin	00779	86090-3
XA2A3J19	1-403946-001	Connector, jack, 5 pin	88869	
XA2A3J20	1-403946-001	Connector, jack, 5 pin	88869	
XA2A4J1		Connector, jack, consisting of:		
	1-900079-003	Capacitor, fixed, feed-thru, 470 pF, +100% -0%, 300 V dc	01121	FW5N-471P
	1-910301-001	Connector, contact, 1 pin	00779	86090-3
XA2A4J2		Connector, jack, consisting of:		
	1-900079-003	Capacitor, fixed, feed-thru, 470 pF, +100% -0%, 300 V dc	01121	FW5N-471P
	1-910301-001	Connector, contact, 1 pin	00779	86090-3
XA2A4J3	1-403946-001	Connector, jack, 5 pin	88869	

Table 8-6. Parts List for Interconnect Assembly, A2 (Cont.)

Ref. Desig.	Singer Part No.	Description	Mfr. Code No.	Mfr. Part No.
XA2A4J4		Connector, jack, consisting of:		
	1-900079-003	Capacitor, fixed, feed-thru, 470 pF, +100%, -0%, 300 V dc	01121	FW5N-471P
	1-910301-001	Connector, contact, 1 pin	00779	86090-3
XA2A4J5	1-403946-001	Connector, jack, 5 pin	88869	
XA2A4J6		Connector, jack, consisting of:		
	1-900079-003	Capacitor, fixed, feed-thru, 470 pF, +100% -0%, 300 V dc	01121	FW5N-471P
	1-910301-001	Connector, contact, 1 pin	00779	86090-3
XA2A4J7	1-403946-001	Connector, jack, 5 pin	88869	
XA2A4J8		Connector, jack, consisting of:		
	1-900079-003	Capacitor, fixed, feed-thru, 470 pF, +100% -0%, 300 V dc	01121	FW5N-471P
	1-910301-001	Connector, contact, 1 pin	00779	86090-3
XA2A4J9	1-403946-001	Connector, jack, 5 pin	88869	
XA2A4J10		Connector, jack, consisting of:		
	1-900079-003	Capacitor, fixed, feed-thru, 470 pF, +100% -0%, 300 V dc	01121	FW5N-471P
	1-910301-001	Connector, contact, 1 pin	00779	86090-3
XA2A4J11	1-403946-001	Connector, jack, 5 pin	88869	
XA2A4J12		Connector, jack, consisting of:		
	1-900079-003	Capacitor, fixed, feed-thru 470 pF, +100% -0%, 300 V dc	01121	FW5N-471P
	1-910301-001	Connector, contact, 1 pin	00779	86090-3
XA2A4J13	1-403946-001	Connector, jack, 5 pin	88869	
XA2A4J14		Connector, jack, consisting of:		
	1-900079-003	Capacitor, fixed, feed-thru, 470 pF, +100% -0%, 300 V dc	01121	FW5N-471P
	1-910301-001	Connector, contact, 1 pin	00779	86090-3
XA2A4J15	1-403946-001	Connector, jack, 5 pin	88869	
XA2A4J16		Connector, jack, consisting of:		
	1-900079-003	Capacitor, fixed, feed-thru, 470 pF, +100% -0%, 300 V dc	01121	FW5N-471P
		Connector, contact, 1 pin	00779	86090-3
XA2A4J17	1-403946-001	Connector, jack, 5 pin	88869	
XA2A4J18		Connector, jack, consisting of:		
	1-900079-003	Capacitor, fixed, feed-thru, 470 pF, +100% -0%, 300 V dc	01121	FW5N-471P
	1-910301-001	Connector, contact, 1 pin	00779	86090-3
XA2A4J19	1-403946-001	Connector, jack, 5 pin	88869	
XA2A4J20	1-403946-001	Connector, jack, 5 pin	88869	

Table 8-7. Parts List for VCO, 2.1-2.0 MHz and 21-20 MHz Assembly, A2A1

Ref. Desig.	Singer Part No.	Description	Mfr. Code No.	Mfr. Part No.
C1	1-900077-002	Capacitor, fixed, ceramic, 0.01 μF, ±20%, 100 V dc	56289	TG-S10
C2	1-900077-002	Capacitor, fixed, ceramic, 0.01 μF, ±20%, 100 V dc	56289	TG-S10
C3	1-900001-013	Capacitor, fixed, plastic, 0.1 μF, ±20%, 250 V dc	73445	C280AE, 0.1 μF
C4	150-1012-040CC	Capacitor, fixed, ceramic, 4 pF, ±0.25 pF, 500 V dc	75292	CC20CH040C
C5	1-900072-027	Capacitor, fixed, mica 270 pF, ±5%, 100 V dc	00853	DS10S1D271J0
C6	1-900098-031	Capacitor, fixed, mica, 100 pF, ±5%, 300 V dc	04062	DM5FC101J
C7	1-900077-002	Capacitor, fixed, ceramic, 0.01 μF, ±20%, 100 V dc	56289	TG-S10
C8	1-900113-002	Capacitor, variable, ceramic, 2 pF to 10 pF, 250 V dc	91293	9301
C9	1-900098-015	Capacitor, fixed, mica, 24 pF, ±5%, 300 V dc	04062	DM5CC240J
C10	150-1012-070CC	Capacitor, fixed, ceramic, 7 pF, ±0.25 pF, 500 V dc	75292	CC20CH070C
C11	150-1012-070CC	Capacitor, fixed, ceramic, 7 pF, ±0.25 pF, 500 V dc	75292	CC20CH070C
C12	1-900077-002	Capacitor, fixed, ceramic, 0.01 μF, ±20%, 100 V dc	56289	TG-S10
C13	1-900077-002	Capacitor, fixed, ceramic, 0.01 μF, ±20%, 100 V dc	56289	TG-S10
C14	1-900077-002	Capacitor, fixed, ceramic, 0.01 μF, ±20%, 100 V dc	56289	TG-S10
C15	1-900072-036	Capacitor, fixed, mica, 620 pF, ±5%, 100 V dc	00853	D10S1D621J0
C16	1-900072-036	Capacitor, fixed, mica, 620 pF, ±5%, 100 V dc	00853	D10S1D621J0
C17	1-900077-002	Capacitor, fixed, ceramic, 0.01 μF, ±20%, 100 V dc	56289	TG-S10
C18	1-900077-002	Ceramic, fixed, ceramic, 0.01 μF, ±20%, 100 V dc	56289	TG-S10
C19	1-900077-002	Ceramic, fixed, ceramic, 0.01 μF, ±20%, 100 V dc	56289	TG-S10
C20	1-900077-002	Capacitor, fixed, ceramic, 0.01 μF, ±20%, 100 V dc	56289	TG-S10
C21	1-900077-002	Capacitor, fixed, ceramic, 0.01 μF, ±20%, 100 V dc	56289	TG-S10
C22	1-900077-002	Capacitor, fixed, ceramic, 0.01 μF, ±20%, 100 V dc	56289	TG-S10
C23	1-900001-013	Capacitor, fixed, plastic, 0.1 μF, ±20%, 250 V dc	73445	C280AE, 0.1 μF
C24	1-900077-002	Capacitor, fixed, ceramic, 0.01 μF, ±20%, 100 V dc	56289	TG-S10

Table 8-7. Parts List for VCO, 2.1-2.0 MHz and 21-20 MHz Assembly, A2A1 (Cont.)

Ref. Desig.	Singer Part No.	Description	Mfr. Code No.	Mfr. Part No.
C25	1-900077-002	Capacitor, fixed, ceramic, 0.01 μF, ±20%, 100 V dc	56289	TG-S10
C26	1-900077-002	Capacitor, fixed, ceramic, 0.01 μF, ±20%, 100 V dc	56289	TG-S10
C27	1-900077-002	Capacitor, fixed, ceramic, 0.01 μF, ±20%, 100 V dc	56289	TG-S10
C28	1-900077-002	Capacitor, fixed, ceramic, 0.01 μF, ±20%, 100 V dc	56289	TG-S10
C29	1-900077-002	Capacitor, fixed, ceramic, 0.01 μF, ±20%, 100 V dc	56289	TG-S10
C30	1-900072-041	Capacitor, fixed, mica, 1000 pF, ±5%, 100 V dc	00853	D10S1D102J0
C31	1-900077-002	Capacitor, fixed, ceramic, 0.01 μF, ±20%, 100 V dc	56289	TG-S10
C32	1-900001-013	Capacitor, fixed, plastic, 0.1 μF, ±20%, 250 V dc	73445	C280AE, 0.1 μF
C33	1-900001-013	Capacitor, fixed, plastic, 0.1 μF, ±20%, 250 V dc	73445	C280AE, 0.1 μF
C34	1-900077-002	Capacitor, fixed, ceramic, 0.01 μF, ±20%, 100 V dc	56289	TG-S10
C35	1-900077-002	Capacitor, fixed, ceramic, 0.01 μF, ±20%, 100 V dc	56289	TG-S10
CR1	1-913085-001	Diode, silicon, Vr=75 V, If=20 mA	50273	1N3062
CR2	1-403993-001	Diode, varactor, CT=50 pF	88869	
J1	1-950031-003	Connector, jack, 1 pin	00779	2-332070-5
J2	1-950031-003	Connector, jack, 3 pin	00779	2-332070-5
J3	1-950031-003	Connector, jack, 1 pin	00779	2-332070-5
J4	1-950031-003	Connector, jack, 1 pin	00779	2-332070-5
J5	1-950031-003	Connector, jack, 3 pin	00779	2-332070-5
J6	1-950031-003	Connector, jack, 3 pin	00779	2-332070-5
J7	1-950031-003	Connector, jack, 1 pin	00779	2-332070-5
J8	1-950031-003	Connector, jack, 1 pin	00779	2-332070-5
J9	1-950031-003	Connector, jack, 1 pin	00779	2-332070-5
L1	1-906043-025	Inductor, fixed, 10 μH, ±10%, 290 mA	81564	4025
L2	1-906045-001	Inductor, fixed, 1.0 μH, ±5%, 1A	73899	LF4W100
L3	1-906043-018	Inductor, fixed, 2.7 μH, ±10%, 595 mA	81564	4018
L4	156-7005-002	Inductor, fixed, 750 ohm, ±20%, 50 MHz	02114	VK200 10/3B
L5	1-906043-025	Inductor, fixed, 10 μH, ±10%, 290 mA	81564	4025
L6	1-906043-025	Inductor, fixed, 10 μH, ±10%, 290 mA	81564	4025

Table 8-7. Parts List for VCO, 2.1-2.0 MHz and 21-20 MHz Assembly, A2A1 (Cont.)

Ref. Desig.	Singer Part No.	Description	Mfr. Code No.	Mfr. Part No.
Q1	1-958018-001	Transistor, silicon, NPN	31718	2N5179
Q2	1-958085-001	Transistor, silicon, JFET	04713	2N5486
Q3	1-958000-002	Transistor, silicon, PNP	04713	2N3906-5
Q4	1-958000-001	Transistor, silicon, NPN	04713	2N3904-5
Q5	1-958000-001	Transistor, silicon, NPN	04713	2N3904-5
Q6	1-958000-002	Transistor, silicon, PNP	04713	2N3906-5
Q7	1-958000-001	Transistor, silicon, NPN	04713	2N3904-5
Q8	1-958000-002	Transistor, silicon, PNP	04713	2N3906-5
Q9	1-958000-001	Transistor, silicon, NPN	04713	2N3904-5
Q10	1-958000-001	Transistor, silicon, NPN	04713	2N3904-5
R1	1-945027-277	Resistor, fixed, film, 7.5 kilohm, ±1%, 1/8 W	19701	RN55-D-7501F
R2	1-945027-233	Resistor, fixed, film, 2.61 kilohm, ±1%, 1/8 W	19701	RN55-D-2611F
R3	1-945000-138	Resistor, fixed, composition, 100 ohm, ±5%, 1/4 W	01121	CB1015
R4	1-945027-320	Resistor, fixed, film, 21 kilohm, ±1%, 1/8 W	19701	RN55-D-2102F
R5	1-945025-285	Resistor, fixed, film, 9.09 kilohm, ±1%, 1/8 W	19701	RN55-D-9091F
R6	1-945000-217	Resistor, fixed, composition, 200 kilohm, ±5%, 1/4 W	01121	CB2045
R7	1-945000-162	Resistor, fixed, composition, 1 kilohm, ±5%, 1/4 W	01121	CB1025
R8	1-945000-193	Resistor, fixed, composition, 20 kilohm, ±5%, 1/4 W	01121	CB2035
R9	1-945000-217	Resistor, fixed, composition, 200 kilohm, ±5%, 1/4 W	01121	CB2045
R10	1-945000-233	Resistor, fixed, composition, 910 kilohm, ±5%, 1/4 W	01121	CB9145
R11	1-945027-403	Resistor, fixed, film, 154 kilohm, ±1%, 1/8 W	19701	RN55-D-1543F
R12	1-945027-157	Resistor, fixed, film, 422 ohm, ±1%, 1/8 W	19701	RN55-D-4220F
R13	1-945027-157	Resistor, fixed, film, 422 ohm, ±1%, 1/8 W	19701	RN55-D-4220F
R14	1-945000-177	Resistor, fixed, composition, 4.3 kilohm, ±5%, 1/4 W	01121	CB4325
R15	1-945000-177	Resistor, fixed, composition, 4.3 kilohm, ±5%, 1/4 W	01121	CB4325
R16	1-945000-155	Resistor, fixed, composition, 510 ohm, ±5%, 1/4 W	01121	CB5115
R17	1-945000-138	Resistor, fixed, composition, 100 ohm, ±5%, 1/4 W	01121	CB1015
R18	1-945000-181	Resistor, fixed, composition, 6.2 kilohm, ±5%, 1/4 W	01121	CB6225

Table 8-7. Parts List for VCO, 2.1-2.0 MHz and 21-20 HMz Assembly, A2A1 (Cont.)

Ref. Desig.	Singer Part No.	Description	Mfr. Code No.	Mfr. Part No.
R19	1-945000-177	Resistor, fixed, composition, 4.3 kilohm, ±5%, 1/4 W	01121	CB4325
R20	1-945000-138	Resistor, fixed, composition, 100 ohm, ±5%, 1/4 W	01121	CB1015
R21	1-945000-138	Resistor, fixed, composition, 100 ohm, ±5%, 1/4 W	01121	CB1015
R22	1-945000-150	Resistor, fixed, composition, 330 ohm, ±5%, 1/4 W	01121	CB3315
R23	1-945000-150	Resistor, fixed, composition, 330 ohm, ±5%, 1/4 W	01121	CB3315
R24	1-945000-181	Resistor, fixed, composition, 6.2 kilohm, ±5%, 1/4 W	01121	CB6225
R25	1-945000-177	Resistor, fixed, composition, 4.3 kilohm, ±5%, 1/4 W	01121	CB4325
R26	1-945000-145	Resistor, fixed, composition, 200 ohm, ±5%, 1/4 W	01121	CB2015
R27	1-945000-138	Resistor, fixed, composition, 100 ohm, ±5%, 1/4 W	01121	CB1015
R28	1-945162-005	Resistor, variable, cermet, 200 ohm, ±20%, 1/2 W	01121	E2A201
R29	1-945000-131	Resistor, fixed, composition, 51 ohm, ±5%, 1/4 W	01121	CB5105
R30	1-945000-184	Resistor, fixed, composition, 8.2 kilohm, ±5%, 1/4 W	01121	CB8225
R31	1-945000-186	Resistor, fixed, composition, 10 kilohm, ±5%, 1/4 W	01121	CB1035
R32	1-945000-138	Resistor, fixed, composition, 100 ohm, ±5%, 1/4 W	01121	CB1015
R33	1-945000-188	Resistor, fixed, composition, 12 kilohm, ±5%, 1/4 W	01121	CB1235
R34	1-945000-170	Resistor, fixed, composition, 2.2 kilohm, ±5%, 1/4 W	01121	CB2225
R35	1-945000-138	Resistor, fixed, composition, 100 ohm, ±5%, 1/4 W	01121	CB1015
R36	1-945000-158	Resistor, fixed, composition, 680 ohm, ±5%, 1/4 W	01121	CB6815
R37	1-945000-126	Resistor, fixed, composition, 33 ohm, ±5%, 1/4 W	01121	CB3305
R38	1-945000-136	Resistor, fixed, composition, 82 ohm, ±5%, 1/4 W	01121	CB8205
R39	1-945000-198	Resistor, fixed, composition, 33 kilohm, ±5%, 1/4 W	01121	CB3335
R40	1-945000-160	Resistor, fixed, composition, 820 ohm, ±5%, 1/4 W	01121	CB8215
R41	1-945162-008	Resistor, variable, cermet, 2 kilohm, 20%, 1/2 W	01121	E4A202
R42	1-945000-163	Resistor, fixed, composition, 1.1 kilohm, ±5%, 1/4 W	01121	CB1125

Table 8-7. Parts List for VCO, 2.1-2.0 MHz and 21-20 MHz Assembly, A2A1 (Cont.)

Ref. Desig.	Singer Part No.	Description	Mfr. Code No.	Mfr. Part No.
R43	1-945000-124	Resistor, fixed, composition, 27 ohm, ±5%, 1/4 W	01121	CB2705
R44	1-945000-169	Resistor, fixed, composition, 2 kilohm, ±5%, 1/4 W	01121	CB2025
R45	1-945000-186	Resistor, fixed, composition 10 kilohm, ±5%, 1/4 W	01121	CB1035
R46	1-945000-196	Resistor, fixed, composition, 27 kilohm, ±5%, 1/4 W	01121	CB2735
R47	1-945000-193	Resistor, fixed, composition, 20 kilohm, ±5%, 1/4 W	01121	CB2035
R48	1-945000-186	Resistor, fixed, composition, 10 kilohm, ±5%, 1/4 W	01121	CB1035
R49	1-945000-193	Resistor, fixed, composition, 20 kilohm, ±5%, 1/4 W	01121	CB2035
U1	1-926116-001	Integrated circuit, high speed binary/decade counter	18324	N8290A

Table 8-8. Parts List for 0.1 kHz, 1.0 kHz and 10 kHz Decade Assemblies, A2A2, A2A3, A2A4

Ref. Desig.	Singer Part No.	Description	Mfr. Code No.	Mfr. Part No.
C1	1-900001-013	Capacitor, fixed, plastic, 0.1 μF, ±20%, 250 V dc	73445	C280AE, 0.1 μF
C2	1-900077-002	Capacitor, fixed, ceramic, 0.01 μF, ±20%, 100 V dc	56289	TG-S10
C3	1-900001-013	Capacitor, fixed, plastic, 0.1 μF, ±20%, 250 V dc	73445	C280AE, 0.1 μF
C4	1-900001-013	Capacitor, fixed, plastic , 0.1 μF, ±20%, 250 V dc	73445	C280AE, 0.1 μF
C5	1-900077-002	Capacitor, fixed, ceramic, 0.01 μF, ±20%, 100 V dc	56289	TG-S10
C6	1-900001-013	Capacitor, fixed plastic, 0.1 μF, ±20%, 250 V dc	73445	C280AE, 0.1 μF
C7	1-900012-002	Capacitor, fixed, ceramic, 0.001 μF, +100% - 0%, 500 V dc	72982	861Z5U102F
C8	1-900012-002	Capacitor, fixed, ceramic, 0.001 μF, +100% - 0%, 500 V dc	72982	861Z5U102F
C9	1-900001-013	Capacitor, fixed, plastic, 0.1 μF, ±20%, 250 V dc	73445	C280AE, 0.1 μF
C10	1-900012-002	Capacitor, fixed, ceramic, 0.001 μF, +100% - 0%, 500 V dc	72982	861Z5U102F
C11	1-900012-002	Capacitor, fixed, ceramic, 0.001 μF, +100% - 0%, 500 V dc	72982	861Z5U102F
C12	1-900001-013	Capacitor, fixed, plastic, 0.1 μF, ±20%, 250 V dc	73445	C280AE, 0.1 μF
C13	1-900001-013	Capacitor, fixed, plastic, 0.1 μF, ±20%, 250 V dc	73445	C280AE, 0.1 μF
C14	1-900012-002	Capacitor, fixed, ceramic, 0.001 μF, +100% - 0%, 500 V dc	72982	861Z5U102F
C15	1-900012-002	Capacitor, fixed, ceramic, 0.001 μF, +100% - 0%, 500 V dc	72982	861Z5U102F
C16	1-900001-013	Capacitor, fixed, plastic, 0.1 μF, ±20%, 250 V dc	73445	C280AE, 0.1 μF
C17	1-900001-013	Capacitor, fixed, plastic, 0.1 μF, ±20%, 250 V dc	73445	C280AE, 0.1 μF
C18	1-900012-002	Capacitor, fixed, ceramic, 0.001 μF, +100% - 0%, 500 V dc	72982	861Z5U102F
C19	1-900012-002	Capacitor, fixed, ceramic, 0.001 μF, +100% - 0%, 500 V dc	72982	861Z5U102F
C20	1-900001-013	Capacitor, fixed, plastic, 0.1 μF, ±20%, 250 V dc	73445	C280AE, 0.1 μF
C21	1-900001-013	Capacitor, fixed, plastic, 0.1 μF, ±20%, 250 V dc	73445	C280AE, 0.1 μF
C22	1-900012-002	Capacitor, fixed, ceramic, 0.001 μF, +100% - 0%, 500 V dc	72982	861Z5U102F
C23	1-900012-002	Capacitor, fixed, ceramic, 0.001 μF, +100% - 0%, 500 V dc	72982	861Z5U102F
C24	1-900001-013	Capacitor, fixed, plastic, 0.1 μF, ±20%, 250 V dc	73445	C280AE, 0.1 μF

Table 8-8. Parts List for 0.1 kHz, 1.0 kHz and 10 kHz Decade Assemblies A2A2, A2A3, A2A4 (Cont.)

Ref. Desig.	Singer Part No.	Description	Mfr. Code No.	Mfr. Part No.
C25	1-900001-013	Capacitor, fixed, plastic, 0.1 μF, ±20%, 250 V dc	73445	C280AE, 0.1 μF
C26	1-900012-002	Capacitor, fixed, ceramic, 0.001 μF, +100%-0%, 500 V dc	72982	861Z5U102F
C27	1-900012-002	Capacitor, fixed, ceramic, 0.001 μF, +100%-0%, 500 V dc	72982	861Z5U102F
C28	1-900001-013	Capacitor, fixed, plastic, 0.1 μF, ±20%, 250 V dc	73445	C280AE, 0.1 μF
C29	1-900001-013	Capacitor, fixed, plastic, 0.1 μF, ±20%, 250 V dc	73445	C280AE, 0.1 μF
C30	1-900012-002	Capacitor, fixed, ceramic, 0.001 μF, +100%-0%, 500 V dc	72982	861Z5U102F
C31	1-900012-002	Capacitor, fixed, ceramic, 0.001 μF, +100%-0%, 500 V dc	72982	861Z5U102F
C32	1-900001-013	Capacitor, fixed, plastic, 0.1 μF, ±20%, 250 V dc	73445	C280AE, 0.1 μF
C33	1-900001-013	Capacitor, fixed, plastic, 0.1 μF, ±20%, 250 V dc	73445	C280AE, 0.1 μF
C34	1-900012-002	Capacitor, fixed, ceramic, 0.001 μF, +100%-0%, 500 V dc	72982	861Z5U102F
C35	1-900001-013	Capacitor, fixed, plastic, 0.1 μF, ±20%, 250 V dc	73445	C280AE, 0.1 μF
C36	1-900001-013	Capacitor, fixed, plastic, 0.1 μF, ±20%, 250 V dc	73445	C280AE, 0.1 μF
C37	1-900098-032	Capacitor, fixed, mica, 110 pF, ±5%, 300 V dc	04062	DM5FC111J
C38	1-900098-037	Capacitor, fixed, mica, 180 pF, ±5%, 100 V dc	04062	DM5FA181J
C39	1-900098-032	Capacitor, fixed, mica, 110 pF, ±5%, 300 V dc	04062	DM5FC111J
C40	1-900077-002	Capacitor, fixed, ceramic, 0.01 μF, ±20%, 100 V dc	56289	TG-S10
C41	1-900001-013	Capacitor, fixed, plastic, 0.1 μF, ±20%, 250 V dc	73445	C280AE, 0.1 μF
C42	1-900001-013	Capacitor, fixed, plastic, 0.1 μF, ± 20%, 250 V dc	73445	C280AE, 0.1 μF
C43	1-900001-013	Capacitor, fixed, plastic, 0.1 μF, ±20%, 250 V dc	73445	C280AE, 0.1 μF
C44	1-900001-013	Capacitor, fixed, plastic, 0.1 μF, ±20%, 250 V dc	73445	C280AE, 0.1 μF
C45	1-900003-054	Capacitor, fixed, mica, 820 pF, ±5%, 300 V dc	72136	DM15821J
C46	1-900098-042	Capacitor, fixed, mica, 300 pF, ±5%, 50 V dc	04062	DM5FY301J
C47	1-900098-011	Capacitor, fixed, mica, 15 pF, ±5%, 300 V dc	04062	DM5CC150J
C48	1-900098-039	Capacitor, fixed, mica, 220 pF, ±5%, 100 V dc	04062	DM5FY221J

Table 8-8. Parts List for 0.1 kHz, 1.0 kHz and 10 kHz Decade Assemblies, A2A2, A2A3, A2A4 (Cont.)

Ref. Desig.	Singer Part No.	Description	Mfr. Code No.	Mfr. Part No.
C49	1-900098-011	Capacitor, fixed, mica, 15 pF, ±5%, 300 V dc	04062	DM5-CC150J
C50	1-900003-054	Capacitor, fixed, mica, 820 pF, ±5%, 300 Vdc	72136	DM15821J
C51	1-900098-042	Capacitor, fixed, mica, 300 pF, ±5%, 50 V dc	04062	DM5FY301J
C52	1-900012-002	Capacitor, fixed, ceramic, 0.001 μF, +100%-0%, 500 V dc	72982	861Z5U102F
C53	1-900001-013	Capacitor, fixed, plastic, 0.1 μF, ±20%, 250 V dc	73445	C280AE, 0.1 μF
C54	1-900077-002	Capacitor, fixed, ceramic, 0.01 μF, ±20%, 100 V dc	56289	TG-S10
C55	1-900001-013	Capacitor, fixed, plastic 0.1 μF, ±20%, 250 V dc	73445	C280AE, 0.1 μF
C56	1-900001-013	Capacitor, fixed, plastic, 0.1 μF, ± 20%, 250 V dc	73445	C280AE, 0.1 μF
C57	1-900001-013	Capacitor, fixed, plastic, 0.1 μF, ±20%, 250 V dc	73445	C280AE, 0.1 μF
C58	1-900001-013	Capacitor, fixed, plastic, 0.1 μF, ±20%, 250 V dc	73445	C280AE, 0.1 μF
C59	1-900098-039	Capacitor, fixed, mica, 220 pF, ±5%, 100 V dc	04062	DM5FY221J
C60	1-900098-034	Capacitor, fixed, mica, 130 pF, ±5%, 100 V dc	04062	DM5FA131J
C61	1-900098-006	Capacitor, fixed, mica, 6 pF, ±10%, 300 V dc	04062	DM5CC060K
C62	1-900098-029	Capacitor, fixed, mica, 82 pF, ±5%, 300 V dc	04062	DM5EC820J
C63	1-900077-002	Capacitor, fixed, ceramic, 0.01 μF, ±20%, 100 V dc	56289	TG-S10
C64	1-900077-002	Capacitor, fixed, ceramic, 0.01 μF, ±20%, 100 V dc	56289	TG-S10
C65	1-900077-002	Capacitor, fixed, ceramic, 0.01 μF, ±20%, 100 V dc	56289	TG-S10
C66	1-900098-039	Capacitor, fixed, mica, 220 pF, ±5%, 100 V dc	04062	DM5FA221J
C67	1-900098-034	Capacitor, fixed, mica, 130 pF, ±5%, 100 V dc	04062	DM5FA131J
C68	1-900001-013	Capacitor, fixed, plastic, 0.1 μF, ±20%, 250 V dc	73445	C280AE, 0.1 μF
C69	1-900012-002	Capacitor, fixed, ceramic, 0.001 μF, +100%-0%, 500 V dc	72982	861Z5U102F
CR1	1-913005-001	Diode, germanium, Vr = 30 V, If = 100 mA	03877	1N273
CR2	1-913005-001	Diode, germanium, Vr = 30 V, If = 100 mA	03877	1N273
CR3	1-913005-001	Diode, germanium, Vr = 30 V, If = 100 mA	03877	1N273

Table 8-8. Parts List for 0.1 kHz, 1.0 kHz and 10 kHz Diode Assemblies, A2A2, A2A3, A2A4 (Cont.)

Ref. Desig.	Singer Part No.	Description	Mfr. Code No.	Mfr. Part No.
CR4	1-913005-001	Diode, germanium, Vr = 30 V, If = 100 mA	03877	1N273
CR5	1-913005-001	Diode, germanium, Vr = 30 V, If = 100 mA	03877	1N273
CR6	1-913005-001	Diode, germanium, Vr = 300 V, If = 100 mA	03877	1N273
CR7	1-913005-001	Diode, germanium, Vr = 30 V, If = 100 mA	03877	1N273
CR8	1-913005-001	Diode, germanium, Vr = 30 V, If = 100 mA	03877	1N273
CR9	1-913005-001	Diode, germanium, Vr = 30 V, If = 100 mA	03877	1N273
CR10	1-913005-001	Diode, germanium, Vr = 30 V, If = 100 mA	03877	1N273
CR11	1-913005-001	Diode, germanium, Vr = 30 V, If = 100 mA	03877	1N273
CR12	1-913005-001	Diode, germanium, Vr = 30 V, If = 100 mA	03877	1N273
CR13	1-913005-001	Diode, germanium, Vr = 30 V, If = 100 mA	03877	1N273
CR14	1-913005-001	Diode, germanium, Vr = 30 V, If = 100 mA	03877	1N273
CR15	1-913005-001	Diode, germanium, Vr = 30 V, If = 100 mA	03877	1N273
CR16	1-913005-001	Diode, germanium, Vr = 30 V, If = 100 mA	03877	1N273
CR17	1-913005-001	Diode, germanium, Vr = 30 V, If = 100 mA	03877	1N273
CR18	1-913005-001	Diode, germanium, Vr = 30 V, If = 100 mA	03877	1N273
CR19	1-913005-001	Diode, germanium, Vr = 30 V, If = 100 mA	03877	1N273
CR20	1-913005-001	Diode, germanium, Vr = 30 V, If = 100 mA	03877	1N273
CR21	1-913005-001	Diode, germanium, Vr = 30 V, If = 100 mA	03877	1N273
CR22	1-913005-001	Diode, germanium, Vr = 30 V, If = 100 mA	03877	1N273
CR23	1-913005-001	Diode, germanium, Vr = 30 V, If = 100 mA	03877	1N273
CR24	1-913005-001	Diode, germanium, Vr = 30 V, If = 100 mA	03877	1N273
CR25	1-913005-001	Diode, germanium, Vr = 30 V, If = 100 mA	03877	1N273
CR26	1-913005-001	Diode, germanium, Vr = 30 V, If = 100 mA	03877	1N273
CR27	1-913005-001	Diode, germanium, Vr = 30 V, If = 100 mA	03877	1N273

Table 8-8. Parts List for 0.1 kHz, 1.0 kHz and 10 kHz Decade Assemblies, A2A2, A2A3, A2A4 (Cont.)

Ref. Desig.	Singer Part No.	Description	Mfr. Code No.	Mfr. Part No.
J1	1-950031-003	Connector, jack, 1 pin	00779	2-332070-5
J2	1-950031-003	Connector, jack, 1 pin	00779	2-332070-5
J3	1-950031-003	Connector, jack, 3 pins	00779	2-332070-5
J4	1-950031-003	Connector, jack, 1 pin	00779	2-332070-5
J5	1-950031-003	Connector, jack, 3 pins	00779	2-332070-5
J6	1-950031-003	Connector, jack, 1 pin	00779	2-332070-5
J7	1-950031-003	Connector, jack, 3 pins	00779	2-332070-5
J8	1-950031-003	Connector, jack, 1 pin	00779	2-332070-5
J9	1-950031-003	Connector, jack, 3 pins	00779	2-332070-5
J10	1-950031-003	Connector, jack, 1 pin	00779	2-332070-5
J11	1-950031-003	Connector, jack, 3 pins	00779	2-332070-5
J12	1-950031-003	Connector, jack, 1 pin	00779	2-332070-5
J13	1-950031-003	Connector, jack, 3 pins	00779	2-332070-5
J14	1-950031-003	Connector, jack, 1 pin	00779	2-332070-5
J15	1-950031-003	Connector, jack, 3 pins	00779	2-332070-5
J16	1-950031-003	Connector, jack, 1 pin	00779	2-332070-5
J17	1-950031-003	Connector, jack, 3 pins	00779	2-332070-5
J18	1-950031-003	Connector, jack, 1 pin	00779	2-332070-5
J19	1-950031-003	Connector, jack, 3 pins	00779	2-332070-5
J20	1-950031-003	Connector, jack, 3 pins	00779	2-332070-5
L1	1-906043-025	Inductor, fixed, 10 μH, ±10%, 290 mA	81564	4025
L2	1-906043-025	Inductor, fixed, 10 μH, ±10%, 290 mA	81564	4025
L3	1-906043-054	Inductor, fixed, 2700 μH, ±10%, 38 mA	81564	4054
L4	1-906043-054	Inductor, fixed, 2700 μH, ±10%, 38 mA	81564	4054
L5	1-906043-046	Inductor, fixed, 560 μH, ±10%, 72 mA	81564	4046
L6	1-906043-046	Inductor, fixed, 560 μH, ±10%, 72 mA	81564	4046
L7	1-906043-046	Inductor, fixed, 560 μH, ±10%, 72 mA	81564	4046
L8	1-906043-046	Inductor, fixed, 560 μH, ±10%, 72 mA	81564	4046
L9	1-906043-042	Inductor, fixed, 270 μH, ±10%, 96 mA	81564	4042
L10	1-906043-042	Inductor, fixed, 270 μH, ±10%, 96 mA	81564	4042
L11	1-906043-042	Inductor, fixed, 270 μH, ±10%, 96 mA	81564	4042
L12	1-906043-035	Inductor, fixed, 68 μH, ±10%, 180 mA	81564	4035

Table 8-8. Parts List for 0.1 kHz, 1.0 kHz and 10 kHz Decade Assemblies, A2A2, A2A3, A2A4 (Cont.)

Ref. Desig.	Singer Part No.	Description	Mfr. Code No.	Mfr. Part No.
L13	1-906043-035	Inductor, fixed, 68 μH, ±10%, 180 mA	81564	4035
L14	2-403855-002	Inductor, variable, 1.28 μH to 1.73 μH	88869	
L15	2-403855-002	Inductor, variable, 1.28 μH to 1.73 μH	88869	
L16	2-403855-002	Inductor, variable, 1.28 μH to 1.73 μH	88869	
L17	2-403855-001	Inductor, variable, 0.64 μH to 0.86 μH	88869	
L18	2-403855-001	Inductor, variable, 0.64 μH to 0.86 μH	88869	
L19	2-403855-001	Inductor, variable, 0.64 μH to 0.86 μH	88869	
Q1	1-958000-002	Transistor, silicon, PNP	04713	2N3906-5
Q2	1-958000-002	Transistor, silicon, PNP	04713	2N3906-5
Q3	1-958000-001	Transistor, silicon, NPN	04713	2N3904-5
Q4	1-958000-001	Transistor, silicon NPN	04713	2N3904-5
Q5	1-958000-002	Transistor, silicon, PNP	04713	2N3906-5
Q6	1-958000-001	Transistor, silicon, NPN	04713	2N3904-5
Q7	1-958000-001	Transistor, silicon, NPN	04713	2N3904-5
Q8	1-958000-001	Transistor, silicon, NPN	04713	2N3904-5
R1	1-945000-049	Resistor, fixed, composition, 10 kilohm, ±10%, 1/4 W	01121	CB1031
R2	1-945000-048	Resistor, fixed, composition, 8.2 kilohm, ±10%, 1/4 W	01121	CB8221
R3	1-945000-041	Resistor, fixed, composition, 2.2 kilohm, ±10%, 1/4 W	01121	CB2221
R4	1-945000-046	Resistor, fixed, composition, 5.6 kilohm, ±10%, 1/4 W	01121	CB5621
R5	1-945000-037	Resistor, fixed, composition, 1 kilohm, ±10%, 1/4 W	01121	CB1021
R6	1-945000-037	Resistor, fixed, composition, 1 kilohm, ±10%, 1/4 W	01121	CB1021
R7	1-945000-036	Resistor, fixed, composition, 820 ohm, ±10%, 1/4 W	01121	CB8211
R8	1-945000-037	Resistor, fixed, composition, 1 kilohm, ±10%, 1/4 W	01121	CB1021
R9	1-945000-041	Resistor, fixed, composition, 2.2 kilohm, ±10%, 1/4 W	01121	CB2221
R10	1-945000-048	Resistor, fixed, composition, 8.2 kilohm, ±10%, 1/4 W	01121	CB8221
R11	1-945000-038	Resistor, fixed, composition, 1.2 kilohm, ±10%, 1/4 W	01121	CB1221
R12	1-945000-048	Resistor, fixed, composition, 8.2 kilohm, ±10%, 1/4 W	01121	CB8221

Table 8-8. Parts List for 0.1 kHz, 1.0 kHz and 10 kHz Decade Assemblies, A2A2, A2A3, A2A4 (Cont.)

Ref. Desig.	Singer Part No.	Description	Mfr. Code No.	Mfr. Part No.
R13	1-945000-038	Resistor, fixed, composition, 1.2 kilohm, ±10%, 1/4 W	01121	CB1221
R14	1-945000-048	Resistor, fixed, composition, 8.2 kilohm, ±10%, 1/4 W	01121	CB8221
R15	1-945000-038	Resistor, fixed, composition, 1.2 kilohm, ±10%, 1/4 W	01121	CB1221
R16	1-945000-048	Resistor, fixed, composition, 8.2 kilohm, ±10%, 1/4 W	01121	CB8221
R17	1-945000-038	Resistor, fixed, composition, 1.2 kilohm, ±10%, 1/4 W	01121	CB1221
R18	1-945000-048	Resistor, fixed, composition, 8.2 kilohm, ±10%, 1/4 W	01121	CB8221
R19	1-945000-038	Resistor, fixed, composition, 1.2 kilohm, ±10%, 1/4 W	01121	CB1221
R20	1-945000-048	Resistor, fixed, composition, 8.2 kilohm, ±10%, 1/4 W	01121	CB8221
R21	1-945000-038	Resistor, fixed, composition, 1.2 kilohm, ±10%, 1/4 W	01121	CB1221
R22	1-945000-048	Resistor, fixed, composition, 8.2 kilohm, ±10%, 1/4 W	01121	CB8221
R23	1-945000-038	Resistor, fixed, composition, 1.2 kilohm, ±10%, 1/4 W	01121	CB1221
R24	1-945000-038	Resistor, fixed, composition, 1.2 kilohm, ±10%, 1/4 W	01121	CB1221
R25	1-945000-025	Resistor, fixed, composition, 100 ohm, ±10%, 1/4 W	01121	CB1011
R26	1-945000-025	Resistor, fixed, composition, 100 ohm, ±10%, 1/4 W	01121	CB1011
R27	1-945000-047	Resistor, fixed, composition, 6.8 kilohm, ±10%, 1/4 W	01121	CB6821
R28	1-945000-165	Resistor, fixed, composition, 1.3 kilohm, ±5%, 1/4 W	01121	CB1325
R29	1-945000-025	Resistor, fixed, composition, 100 ohm, ±10%, 1/4 W	01121	CB1011
R30	1-945000-155	Resistor, fixed, composition, 510 ohm, ±5%, 1/4 W	01121	CB5115
R31	1-945000-049	Resistor, fixed, composition, 10 kilohm, ±10%, 1/4 W	01121	CB1031
R32	1-945000-041	Resistor, fixed, composition, 2.2 kilohm, ±10%, 1/4 W	01121	CB2221
R33	1-945000-025	Resistor, fixed, composition, 100 ohm, ±10%, 1/4 W	01121	CB1011
R34	1-945000-040	Resistor, fixed, composition, 1.8 kilohm, ±10%, 1/4 W	01121	CB1821
R35	1-945000-025	Resistor, fixed, composition, 100 ohm, ±10%, 1/4 W	01121	CB1011
R36	1-945000-047	Resistor, fixed, composition, 6.8 kilohm, ±10%, 1/4 W	01121	CB6821

Table 8-8. Parts List for 0.1 kHz, 1.0 kHz and 10 kHz Decade Assemblies, A2A2, A2A3, A2A4 (Cont.)

Ref. Desig.	Singer Part No.	Description	Mfr. Code No.	Mfr. Part No.
R37	1-945160-001	Resistor, variable, cermet, 100 ohm, ±20%, 1/4 W	32997	3352E101
R38	1-945000-159	Resistor, fixed, composition, 750 ohm, ±5%, 1/4 W	01121	CB7515
R39	1-945000-025	Resistor, fixed, composition, 100 ohm, ±10%, 1/4 W	01121	CB1011
R40	1-945000-047	Resistor, fixed, composition, 6.8 kilohm, ±10%, 1/4 W	01121	CB6821
R41	1-945000-175	Resistor, fixed, composition, 3.6 kilohm, ±5%, 1/4 W	01121	CB3625
R42	1-945000-047	Resistor, fixed, composition, 6.8 kilohm, ±10%, 1/4 W	01121	CB6821
R43	1-945000-027	Resistor, fixed, composition, 150 ohm, ±10%, 1/4 W	01121	CB1511
R44	1-945000-037	Resistor, fixed, composition, 1 kilohm, ±10%, 1/4 W	01121	CB1021
R45	1-945000-025	Resistor, fixed, composition, 100 ohm, ±10%, 1/4 W	01121	CB1011
R46	1-945000-057	Resistor, fixed, composition, 47 kilohm, ±10%, 1/4 W	01121	CB4731
R47	1-945000-033	Resistor, fixed, composition, 470 ohm, ±10%, 1/4 W	01121	CB4711
R48	1-945000-032	Resistor, fixed, composition, 390 ohm, ±10%, 1/4 W	01121	CB3911
R49	1-945000-037	Resistor, fixed, composition, 1 kilohm, ±10%, 1/4 W	01121	CB1021
R50	1-945160-005	Resistor, variable, cermet, 1 kilohm, ±20%, 1/4 W	32997	3352E102
R51	1-945000-022	Resistor, fixed, composition, 56 ohm, ±10%, 1/4 W	01121	CB5601
U1	1-926007-026	Integrated circuit, doubly balanced mixer	01295	SN76514N
U2	1-926007-026	Integrated circuit, doubly balanced mixer	01295	SN76514N
U3	1-926116-001	Integrated circuit, high speed decade/binary	18324	N8290A

Table 8-9. Parts List for Interconnect Assembly, A3

Ref. Desig.	Singer Part No.	Description	Mfr. Code No.	Mfr. Part No.
A3A1	4-004983-001	Assembly, fixed frequency generator	88869	
A3A2	4-005027-001	Assembly, 100 kHz decade and diode switch	88869	
A3A3	4-005001-001	Assembly, 1 MHz decade and diode switch	88869	
J1	1-403946-001	Connector, jack, 10 pin	88869	
J2	1-403946-001	Connector, jack, 14 pin	88869	
J3	556-205-001	Connector, jack, SMB	98291	51-051-000
J4	556-205-001	Connector, jack, SMB	98291	51-051-000
J5		Connector, jack, solder point		
J6		Connector, jack, solder point		
W1	2-202627-001	Cable assembly, semi-rigid coax, 1.5 in.	88869	
W2	2-202628-001	Cable assembly, semi-rigid coax, 8.4 in.	88869	
W3	2-202629-001	Cable assembly, semi-rigid coax, 6.4 in.	88869	
W4	2-202630-001	Cable assembly, semi-rigid coax, 11.9 in.	88869	
W5	2-202631-001	Cable assembly, semi-rigid coax, 8.2 in.	88869	
W6	2-202632-001	Cable assembly, semi-rigid coax, 2.4 in.	88869	
W7	2-202633-001	Cable assembly, semi-rigid coax, 13.3 in.	88869	
W8	2-202634-001	Cable assembly, semi-rigid coax, 8.5 in.	88869	
W9	2-202635-001	Cable assembly, semi-rigid coax, 10.1 in.	88869	
W10	2-202636-001	Cable assembly, semi-rigid coax, 8.6 in.	88869	
W11	2-202637-001	Cable assembly, semi-rigid coax, 7.4 in.	88869	
W12	2-202638-001	Cable assembly, semi-rigid coax, 7.7 in.	88869	
W13	2-202639-001	Cable assembly, semi-rigid coax, 15.5 in.	88869	
W14	2-202640-001	Cable assembly, semi-rigid coax, 1.3 in.	88869	
XA3A1J1		Connector, jack, consisting of:		
	1-900079-003	Capacitor, fixed, feed-thru, 470 pF, +100% -0%, 300 V dc	01121	FW5N-471P
	1-910301-001	Connector, contact, 1 pin	00779	86090-3
XA3A1J2	1-403946-001	Connector, jack, 5 pin	88869	
XA3A1J3	1-403946-001	Connector, jack, 5 pin	88869	
XA3A1J4	1-403946-001	Connector, jack, 5 pin	88869	
XA3A1J5	1-403946-001	Connector, jack, 5 pin	88869	
XA3A1J6	1-403946-001	Connector, jack, 5 pin	88869	
XA3A1J7		Connector, jack, consisting of:		
	1-900079-003	Capacitor, fixed, feed-thru, 470 pF, +100% -0%, 300 V dc	01121	FW5N-471P
	1-910301-001	Connector, contact, 1 pin	00779	86090-3
XA3A1J8	1-403946-001	Connector, jack, 5 pin	88869	
XA3A1J9	1-403946-001	Connector, jack, 5 pin	88869	
XA3A1J10	1-403946-001	Connector, jack, 5 pin	88869	
XA3A1J11	1-403946-001	Connector, jack, 5 pin	88869	
XA3A1J12	1-403946-001	Connector, jack, 5 pin	88869	
XA3A1J13		Not used		

Table 8-9. Parts List for Interconnect Assembly, A3 (Cont.)

Ref. Desig.	Singer Part No.	Description	Mfr. Code No.	Mfr. Part No.
XA3A1J14	1-403946-001	Connector, jack, 5 pin	88869	
XA3A1J15	1-403946-001	Connector, jack, 5 pin	88869	
XA3A1J16	1-403945-001	Connector, jack, 5 pin	88869	
XA3A1J17	1-403946-001	Connector, jack, 5 pin	88869	
XA3A1J18	1-403946-001	Connector, jack, 5 pin	88869	
XA3A1J19	1-403946-001	Connector, jack, 5 pin	88869	
XA3A1J20	1-403946-001	Connector, jack, 5 pin	88869	
XA3A1J21	1-403946-001	Connector, jack, 5 pin	88869	
XA3A1J22	1-403946-001	Connector, jack, 5 pin	88869	
XA3A1J23	1-403946-001	Connector, jack, 5 pin	88869	
XA3A1J24		Connector, jack, consisting of:		
	1-900079-003	Capacitor, fixed, feed-thru, 470 pF +100% -0%, 300 V dc	01121	FW5N-471P
	1-910301-001	Connector, contact, 1 pin	00779	86090-3
XA3A1J25		Connector, jack, consisting of:		
	1-900079-003	Capacitor, fixed, feed-thru 470 pF, +100% - 0%, 300 V dc	01121	FW5N-471P
	1-910301-001	Connector, contact, 1 pin	00779	86090-3
XA3A2J1		Connector, jack, consisting of:		
	1-900079-003	Capacitor, fixed, feed-thru 470 pF, +100% -0%, 300 V dc	01121	FW5N-471P
	1-910301-001	Connector, contact, 1 pin	00779	86090-3
XA3A2J2	1-403946-001	Connector, jack, 5 pin	88869	
XA3A2J3		Connector, jack, consisting of:		
	1-900079-003	Capacitor, fixed, feed-thru, 470 pF, +100% -0%, 300 V dc	01121	FW5N-471P
	1-910301-001	Connector, contact, 1 pin	00779	86090-3
XA3A2J4	1-403946-001	Connector, jack, 5 pin	88869	
XA3A2J5		Connector, jack, consisting of:		
	1-900079-003	Capacitor, fixed, feed-thru, 470 pF, +100% -0%, 300 V dc	01121	FW5N-471P
	1-910301-001	Connector, contact, 1 pin	00779	86090-3
XA3A2J6	1-403946-001	Connector, jack, 5 pin	88869	
XA3A2J7		Connector, jack, consisting of:		
	1-900079-003	Capacitor, fixed, feed-thru, 470 pF, +100% -0%, 300 V dc	01121	FW5N-471P
	1-910301-001	Connector, contact, 1 pin	00779	86090-3
XA3A2J8	1-403946-001	Connector, jack, 5 pin	88869	
XA3A2J9		Connector, jack, consisting of:		
	1-900079-003	Capacitor, fixed, feed-thru, 470 pF, +100% -0%, 300 V dc	01121	FW5N-471P
	1-910301-001	Connector, contact, 1 pin	00779	86090-3
XA3A2J10	1-403946-001	Connector, jack, 5 pin	88869	

Table 8-9. Parts List for Interconnect Assembly, A3 (Cont.)

Ref. Desig.	Singer Part No.	Description	Mfr. Code No.	Mfr. Part No.
XA3A2J11		Connector, jack, consisting of:		
	1-900079-003	Capacitor, fixed, feed-thru, 470 pF, +100% -0%, 300 V dc	01121	FW5N-471P
	1-910301-001	Connector, contact, 1 pin	00779	86090-3
XA3A2J12	1-403946-001	Connector, jack, 5 pin	88869	
XA3A2J13		Connector, jack, consisting of:		
	1-900079-003	Capacitor, fixed, feed-thru, 470 pF, +100% -0%, 300 V dc	01121	FW5N-471P
	1-910301-001	Connector, contact, 1 pin	00779	86090-3
XA3A2J14	1-403946-001	Connector, jack, 5 pin	88869	
XA3A2J15		Connector, jack, consisting of:		
	1-900079-003	Capacitor, fixed, feed-thru, 470 pF, +100% - 0%, 300 V dc	01121	FW5N-471P
	1-910301-001	Connector, contact, 1 pin	00779	86090-3
XA3A2J16	1-403946-001	Connector, jack, 5 pin	88869	
XA3A2J17		Connector, jack, consisting of:		
	1-900079-003	Capacitor, fixed, feed-thru, 470 pF, +100% - 0%, 300 V dc	01121	FW5N-471P
	1-910301-001	Connector, contact, 1 pin	00779	86090-3
XA3A2J18	1-403946-001	Connector, jack, 5 pin	88869	
XA3A2J19	1-403946-001	Connector, jack, 5 pin	88869	
XA3A3J1		Connector, jack, consisting of:		
	1-900079-003	Capacitor, fixed, feed-thru, 470 pF, +100% -0%, 300 V dc	01121	FW5N-471P
	1-910301-001	Connector, contact, 1 pin	00779	86090-3
XA3A3J2		Connector, jack, consisting of:		
	1-900079-003	Capacitor, fixed, feed-thru, 470 pF, +100% -0%, 300 V dc	01121	FW5N-471P
	1-910301-001	Connector, contact, 1 pin	00779	86090-3
XA3A3J3		Connector, jack, consisting of:		
	1-900079-003	Capacitor, fixed, feed-thru, 470 pF, +100% -0%, 300 V dc	01121	FW5N-471P
	1-910301-001	Connector, contact, 1 pin	00779	86090-3
XA3A3J4	1-403946-001	Connector, jack, 5 pin	88869	
XA3A3J5	1-403946-001	Connector, jack, 5 pin	88869	
XA3A3J6	1-403946-001	Connector, jack, 5 pin	88869	
XA3A3J7	1-403946-001	Connector, jack, 5 pin	88869	
XA3A3J8		Connector, jack, consisting of:		
	1-900079-003	Capacitor, fixed, feed-thru, 470 pF, +100% -0%, 300 V dc	01121	FW5N-471P
	1-910301-001	Connector, contact, 1 pin	00779	86090-3
XA3A3J9		Connector, jack, consisting of:		
	1-900079-003	Capacitor, fixed, feed-thru, 470 pF, +100% -0%, 300 V dc	01121	FW5N-471P

Table 8-9. Parts List for Interconnect Assembly, A3 (Cont.)

Ref. Desig.	Singer Part No.	Description	Mfr. Code No.	Mfr. Part No.
	1-910-301-001	Connector, contact, 1 pin	00779	86090-3
XA3A3J11		Connector, jack, consisting of:		
	1-900079-003	Capacitor, fixed, feed-thru 470 pF, +100% -0%, 300 V dc	01121	FW5N-471P
	1-910301-001	Connector, contact, 1 pin	00779	86090-3
XA3A3J12		Connector, jack, consisting of:		
	1-900079-003	Capacitor, fixed, feed-thru, 470 pF, +100% -0%, 300 V dc	01121	FW5N-471P
	1-910301-001	Connector, contact, 1 pin	00779	86090-3
XA3A3J13	1-403946-001	Connector, jack, 5 pin	88869	
XA3A3J14	1-403946-001	Connector, jack, 5 pin	88869	
XA3A3J15	1-403946-001	Connector, jack, 5 pin	88869	
XA3A3J16		Connector, jack, consisting of:		
	1-900079-003	Capacitor, fixed, feed-thru, 470 pF, +100% - 0%, 300 V dc	01121	FW5N-471P
	1-910301-001	Connector, contact, 1 pin	00779	86090-3

Table 8-10. Parts List for Fixed Frequency Generator Assembly, A3A1

Ref. Desig.	Singer Part No.	Description	Mfr. Code No.	Mfr. Part No.
C1	1-900003-047	Capacitor, fixed, mica, 470 pF, ±5%, 500 V dc	72136	DM15F471J
C2	1-900003-054	Capacitor, fixed, mica 820 pF, ±5%, 300 V dc	72136	DM15F821J
C3	1-900098-004	Capacitor, fixed, mica 4 pF, ±0.5 pF, 300 V dc	04062	DM5CC040D
C4	1-900003-047	Capacitor, fixed, mica, 470 pF, ±5%, 500 V dc	72136	DM15F471J
C5	1-900003-054	Capacitor, fixed, mica, 820 pF, ±5%, 300 V dc	72136	DM15F821J
C6	1-900001-013	Capacitor, fixed, plastic, 0.1 μF, ±20%, 250 V dc	73445	C280AE, 0.1 μF
C7	1-900077-002	Capacitor, fixec, ceramic 0.01 μF, ±20%, 100 V dc	56289	TG-S10
C8	1-900077-002	Capacitor, fixed, ceramic 0.01 μF, ±20%, 100 V dc	56289	TG-S10
C9	1-900003-053	Capacitor, fixed, mica, 750 pF, ±5%, 300 V dc	72136	DM15F751J
C10	1-900003-049	Capacitor, fixed, mica 510 pF, ±5%, 500 V dc	72136	DM15F511J
C11	1-900077-002	Capacitor, fixed, ceramic 0.01 μF, ±20%, 100 V dc	56289	TG-S10
C12	1-900001-013	Capacitor, fixed, plastic 0.1 μF, ±20%, 250 V dc	73445	C280AE, 0.1 μF
C13	1-900077-002	Capacitor, fixed, ceramic, 0.01 μF, ±20%, 100 V dc	56289	TG-S10
C14	1-900077-002	Capacitor, fixed, ceramic, 0.01 μF, ±20%, 100 V dc	56289	TG-S10
C15	1-900001-013	Capacitor, fixed, plastic 0.1 μF, ±20%, 250 V dc	73445	C280AE, 0.1 μF
C16	1-900077-002	Capacitor, fixed, ceramic 0.01 μF, ±20%, 100 V dc	56289	TG-S10
C17	1-900077-002	Capacitor, fixed, ceramic 0.01 μF, ±20%, 100 V dc	56289	TG-S10
C18	1-900098-037	Capacitor, fixed, mica, 180 pF, ±5%, 100 V dc	04062	DM5FA181J
C19	1-900003-046	Capacitor, fixed, mica, 430 pF, ±5%, 500 V dc	72136	DM15F431J
C20	1-900098-002	Capacitor, fixed, mica, 2 pF, ±0.5 pF, 300 V dc	04062	DM5CC020J
C21	1-900098-037	Capacitor, fixed, mica, 180 pF, ±5%, 100 V dc	04062	DM5FA181J
C22	1-900003-046	Capacitor, fixed, mica 430 pF, ±5%, 500 V dc	72136	DM15F431J
C23	1-900001-013	Capacitor, fixed, plastic 0.1 μF, ±20%, 250 V dc	73445	C280AE, 0.1 μF
C24	1-900077-002	Capacitor, fixed, plastic 0.01 μF, ±20%, 100 V dc	56289	TG-S10
C25	1-900077-002	Capacitor, fixed, plastic, 0.01 μF, ±20%, 100 V dc	56289	TG-S10

Table 8-10. Parts List for Fixed Frequency Generator Assembly, A3A1 (Cont.)

Ref. Desig.	Singer Part No.	Description	Mfr. Code No.	Mfr. Part No.
C26	1-900098-037	Capacitor, fixed, mica, 180 pF, ±5%, 100 V dc	04062	DM5FA181J
C27	1-900098-044	Capacitor, fixed, mica, 360 pF, ±5%, 50 V dc	04062	DM5FY361J
C28	1-900001-013	Capacitor, fixed, plastic, 0.1 μF, ±20%, 250 V dc	73445	C280AE,0.1 μF
C29	1-900077-002	Capacitor, fixed, plastic, 0.01 μF, ±20%, 100 V dc	56289	TG-S10
C30	1-900077-002	Capacitor, fixed, plastic, 0.01 μF, ±20%, 100 V dc	56289	TG-S10
C31	1-900001-013	Capacitor, fixed, plastic, 0.1 μF, ±20%, 250 V dc	73445	C280AE, 0.1 μF
C32	1-900077-002	Capacitor, fixed, ceramic, 0.01 μF, ±20%, 100 V dc	56289	TG-S10
C33	1-900001-013	Capacitor, fixed, plastic, 0.1 μF, ±20%, 250 V dc	73445	C280AE, 0.1 μF
C34	1-900077-002	Capacitor, fixed, ceramic 0.01 μF, ±20%, 100 V dc	56289	TG-S10
C35	1-900077-002	Capacitor, fixed, ceramic, 0.01 μF, ±20%, 100 V dc	56289	TG-S10
C36	1-900098-037	Capacitor, fixed, mica 180 pF, ±5%, 100 V dc	04062	DM5FA181J
C37	1-900003-046	Capacitor, fixed, mica, 430 pF, ±5%, 500 V dc	72136	DM15F431J
C38	1-900098-002	Capacitor, fixed, mica, 2 pF, ±0.5 pF, 300 V dc	04062	DM5CC020D
C39	1-900098-037	Capacitor, fixed, mica, 180 pF, ±5%, 100 V dc	04062	DM5FA181J
C40	1-900003-046	Capacitor, fixed, mica, 430 pF, ±5%, 500 V dc	72136	DM15F431J
C41	1-900001-013	Capacitor, fixed, plastic, 0.1 μF, ±20%, 250 V dc	73445	C280AE, 0.1 μF
C42	1-900077-002	Capacitor, fixed, ceramic, 0.01 μF, ±20%, 100 V dc	56289	TG-S10
C43	1-900077-002	Capacitor, fixed, ceramic, 0.01 μF, ±20%, 100 V dc	56289	TG-S10
C44	1-900098-037	Capacitor, fixed, mica, 180 pF, ±5%, 100 V dc	04062	DM5FA181J
C45	1-900098-044	Capacitor, fixed, mica, 360 pF, ±5%, 50 V dc	04062	DM5FY361J
C46	1-900077-002	Capacitor, fixed, ceramic, 0.01 μF, ±20%, 100 V dc	56289	TG-S10
C47	1-900077-002	Capacitor, fixed, ceramic, 0.01 μF, ±20%, 100 V dc	56289	TG-S10
C48	1-900001-013	Capacitor, fixed, plastic, 0.1 μF, ±20%, 250 V dc	73445	C280AE, 0.1 μF
C49	1-900098-026	Capacitor, fixed, mica, 62 pF, ±5%, 300 V dc	04062	DM5EC620J
C50	1-900098-032	Capacitor, fixed, mica, 110 pF, ±5%, 300 V dc	04062	DM5FC111J

Table 8-10. Parts List for Fixed Frequency Generator Assembly, A3A1 (Cont.)

Ref. Desig.	Singer Part No.	Description	Mfr. Code No.	Mfr. Part No.
C51	1-900098-032	Capacitor, fixed, mica, 110 pF, ±5%, 300 V dc	04062	DM5FC111J
C52	1-900098-026	Capacitor, fixed, mica, 62 pF, ±5%, 300 V dc	04062	DM5EC620J
C53	1-900098-033	Capacitor, fixed, mica, 120 pF, ±5%, 300 V dc	04062	DM5FC121J
C54	1-900098-038	Capacitor, fixed, mica, 200 pF, ±5%, 100 V	04062	DM5FA201J
C55	1-900098-033	Capacitor, fixed, mica, 120 pF, ±5%, 300 V dc	04062	DM5FC121J
C56	1-900077-002	Capacitor, fixed, ceramic, 0.01 μF, ±20%, 100 V dc	56289	TG-S10
C57	1-900001-013	Capacitor, fixed, plastic, 0.1 μF, ±20%, 250 V dc	73445	C280AE, 0.1 μF
C58	1-900077-002	Capacitor, fixed, ceramic, 0.01 μF, ±20%, 100 V dc	56289	TG-S10
C59	1-900077-002	Capacitor, fixed, ceramic, 0.01 μF, ±20%, 100 V dc	56289	TG-S10
C60	1-900001-013	Capacitor, fixed, plastic, 0.1 μF, ±20%, 250 V dc	73445	C280AE, 0.1 μF
C61	1-900077-002	Capacitor, fixed, ceramic, 0.01 μF, ±20%, 100 V dc	56289	TG-S10
C62	1-900077-002	Capacitor, fixed, ceramic, 0.01 μF, ±20%, 100 V dc	56289	TG-S10
C63	1-900003-046	Capacitor, fixed, mica, 430 pF, ±5%, 500 V dc	72136	DM15F431J
C64	1-900098-037	Capacitor, fixed, mica, 180 pF, ±5%, 100 V dc	04062	DM5FA181J
C65	1-900098-002	Capacitor, fixed, mica, 2 pF, ±0.5 pF, 300 V dc	04062	DM5CC020D
C66	1-900098-037	Capacitor, fixed, mica, 180 pF, ±5%, 100 V dc	04062	DM5FA181J
C67	1-900003-046	Capacitor, fixed, mica, 430 pF, ±5%, 500 V dc	72136	DM15F431J
C68	1-900001-013	Capacitor, fixed, plastic, 0.1 μF, ±20%, 250 V dc	73445	C280AE, 0.1 μF
C69	1-900077-002	Capacitor, fixed, ceramic, 0.01 μF, ±20%, 100 V dc	56289	TG-S10
C70	1-900077-002	Capacitor, fixed, ceramic, 0.01 μF, ±20%, 100 V dc	56289	TG-S10
C71	1-900098-037	Capacitor, fixed, mica, 180 pF, ±5%, 100 V dc	04062	DM5FA181J
C72	1-900098-044	Capacitor, fixed, mica, 360 pF, ±5%, 50 V dc	04062	DM5FY361J
C73	1-900077-002	Capacitor, fixed, ceramic, 0.01 μF, ±20%, 100 V dc	56289	TG-S10
C74	1-900001-013	Capacitor, fixed, plastic, 0.1 μF, ±20%, 250 V dc	73445	C280AE, 0.1 μF

Table 8-10. Parts List for Fixed Frequency Generator Assembly, A3A1 (Cont.)

Ref. Desig.	Singer Part No.	Description	Mfr. Code No.	Mfr. Part No.
C75	1-900003-053	Capacitor, fixed, mica, 750 pF, ±5%, 300 V dc	72136	DM15F751J
C76	1-900003-057	Capacitor, fixed, mica, 1200 pF, ±5%, 100 V dc	72136	DM15F122J
C77	1-900098-032	Capactior, fixed, mica, 110 pF, ±5%, 300 V dc	04062	DM5FC111J
C78	1-900098-037	Capacitor, fixed, mica, 180 pF, ±5%, 100 V dc	04062	DM5FA181J
C79	1-900098-032	Capacitor, fixed, mica, 110 pF, ±5%, 300 V dc	04062	DM5FC111J
C80	1-900077-002	Capacitor, fixed, ceramic, 0.01 μF, ±20%, 100 V dc	56289	TG-S10
C81	1-900001-013	Capacitor, fixed, plastic, 0.1 μF, ±20%, 250 V dc	73445	C280AE, 0.1 μF
C82	1-900001-013	Capacitor, fixed, plastic, 0.1 μF, ±20%, 250 V dc	73445	C280AE, 0.1 μF
C83	1-900003-045	Capacitor, fixed, mica, 390 pF, ±5%, 500 V dc	72136	DM15F391J
C84	1-900003-053	Capacitor, fixed, mica, 750 pF, ±5%, 300 V dc	72136	DM15F751J
C85	1-900098-004	Capacitor, fixed, mica, 4 pF, ±0.5 pF, 300 V dc	04062	DM5CC040D
C86	1-900003-045	Capacitor, fixed, mica, 390 pF, ±5%, 500 V dc	72136	DM15F391J
C87	1-900003-053	Capacitor, fixed, mica, 750 pF, ±5%, 300 V dc	72136	DM15F751J
C88	1-900001-013	Capacitor, fixed, plastic, 0.1 μF, ±20%, 250 V dc	73445	C280AE, 0.1 μF
C89	1-900077-002	Capacitor, fixed, ceramic, 0.01 μF, ±20%, 100 V dc	56289	TG-S10
C90	1-900077-002	Capacitor, fixed, ceramic, 0.01 μF, ±20%, 100 V dc	56289	TG-S10
C91	1-900003-046	Capacitor, fixed, mica 430 pF, ±5%, 500 V dc	72136	DM15F431J
C92	1-900003-059	Capacitor, fixed, mica, 660 pF, ±5%, 300 V dc	72136	DM15F661J
C93	1-900001-013	Capacitor, fixed, plastic, 0.1 μF, ±20%, 250 V dc	73445	C280AE, 0.1 μF
C94		Not used		
C95	1-900077-002	Capacitor, fixed, ceramic, 0.01 μF, ±20%, 100 V dc	56289	TG-S10
C96	1-900077-002	Capacitor, fixed, ceramic, 0.01 μF, ±20%, 100 V dc	56289	TG-S10
C97	1-900001-013	Capacitor, fixed, plastic, 0.1 μF, ±20%, 250 V dc	56289	C280AE, 0.1 μF
C98	1-900077-002	Capacitor, fixed, ceramic 0.01 μF, ±20%, 100 V dc	56289	TG-S10
C99	1-900077-002	Capacitor, fixed, ceramic, 0.01 μF, ±20%, 100 V dc	56289	TG-S10

Table 8-10. Parts List for Fixed Frequency Generator Assembly, A3A1 (Cont.)

Ref. Desig.	Singer Part No.	Description	Mfr. Code No.	Mfr. Part No.
C100		Not used		
C101		Not used		
C102	1-900098-037	Capacitor, fixed, mica, 180 pF, ±5%, 100 V dc	04062	DM5FA181J
C103	1-900003-046	Capacitor, fixed, mica, 430 pF, ±5%, 500 V dc	72136	DM15F431J
C104	1-900098-002	Capacitor, fixed, mica, 2 pF, ±0.5 pF, 300 V dc	04062	DM5CC020D
C105	1-900098-037	Capacitor, fixed, mica, 180 pF, ±5%, 100 V dc	04062	DM5FA181J
C106	1-900003-046	Capacitor, fixed, mica 430 pF, ±5%, 500 V dc	72136	DM15F431J
C107	1-900001-013	Capacitor, fixed, plastic, 0.1 μF, ±20%, 250 V dc	73445	C280AE, 0.1 μF
C108	1-900077-002	Capacitor, fixed, ceramic, 0.01 μF, ±20%, 100 V dc	56289	TG-S10
C109	1-900077-002	Capacitor, fixed, ceramic, 0.01 μF, ±20%, 100 V dc	56289	TG-S10
C110	1-900098-037	Capacitor, fixed, mica, 180 pF, ±5%, 100 V dc	04062	DM5FA181J
C111	1-900098-044	Capacitor, fixed, mica, 360 pF, ±5%, 50 V dc	04062	DM5FY361J
C112	1-900001-013	Capacitor, fixed, plastic, 0.1 μF, ±20%, 250 V dc	73445	C280AE, 0.1 μF
C113	1-900077-002	Capacitor, fixed, ceramic, 0.01 μF, ±20%, 100 V dc	56289	TG-S10
C114	1-90000-013	Capacitor, fixed, plastic, 0.1 μF, ±20%, 250 V dc	73445	C280AE, 0.1 μF
C115	1-900098-019	Capacitor, fixed, mica, 36 pF, ±5%, 300 V dc	04062	DM5EC360J
C116	1-900098-026	Capacitor, fixed, mica, 62 pF, ±5%, 300 V dc	04062	DM5EC620J
C117	1-900098-019	Capacitor, fixed, mica, 36 pF, ±5%, 300 V dc	04062	DM5EC360J
C118	1-900077-002	Capacitor, fixed, ceramic, 0.01 μF, ±20%, 100 V dc	56289	TG-S10
C119	1-900001-013	Capacitor, fixed, plastic, 0.1 μF, ±20%, 250 V dc	73445	C180AE, 0.1 μF
C120	1-900077-002	Capacitor, fixed, ceramic, 0.01 μF, ±20%, 100 V dc	56289	TG-S10
C121	1-900001-013	Capacitor, fixed, plastic, 0.1 μF, ±20%, 250 V dc	73445	C280AE, 0.1 μF
C122	1-900098-026	Capacitor, fixed, mica, 62 pF, ±5%, 300 V dc	04062	DM5EC620J
C123	1-900098-032	Capacitor, fixed, mica, 110 pF, ±5%, 300 V dc	04062	DM5FC111J
C124	1-900098-032	Capacitor, fixed, mica, 110 pF, ±5%, 300 V dc	04062	DM5FC111J

Table 8-10. Parts List for Fixed Frequency Generator Assembly, A3A1 (Cont.)

Ref. Desig.	Singer Part No.	Description	Mfr. Code No.	Mfr. Part No.
C125	1-900098-026	Capacitor, fixed, mica, 62 pF, ±5%, 300 V dc	04062	DM5EC620J
C126	1-900098-032	Capacitor, fixed, mica, 110 pF, ±5%, 300 V dc	04062	DM5FC111J
C127	1-900098-032	Capacitor, fixed, mica, 110 pF, ±5%, 300 V dc	04062	DM5FC111J
C128	1-900077-002	Capacitor, fixed, ceramic, 0.01 μF, ±20%, 100 V dc	56289	TG-S10
C129	1-900001-013	Capacitor, fixed, plastic, 0.1 μF, ±20%, 250 V dc	73445	C280AE, 0.1 μF
C130	1-900003-059	Capacitor, fixed, mica, 660 pF, ±5%, 300 V dc	72136	DM15F661J
C131	1-900003-057	Capacitor, fixed, mica, 1200 pF, ±5%, 100 V dc	72136	DM15F122J
C132	1-900077-002	Capacitor, fixed, ceramic, 0.01 μF, ±20%, 100 V dc	56289	TG-S10
C133	1-900001-013	Capacitor, fixed, plastic, 0.1 μF, ±20%, 250 V dc	73445	C280AE, 0.1 μF
C134	1-900077-002	Capacitor, fixed, ceramic, 0.01 μF, ±20%, 100 V dc	56289	TG-S10
C135	1-900001-013	Capacitor, fixed, plastic, 0.1 μF, ±20%, 250 V dc	73445	C280AE, 0.1 μF
C136	1-900098-019	Capacitor, fixed, mica, 36 pF, ±5%, 300 V dc	04062	DM5EC360J
C137	1-900098-026	Capacitor, fixed, mica, 62 pF,±5%, 300 V dc	04062	DM5EC620J
C138	1-900098-019	Capacitor, fixed, mica, 36 pF, ±5%, 300 V dc	04062	DM5EC360J
C139	1-900077-002	Capacitor, fixed, ceramic, 0.01 μF, ±20%, 100 V dc	56289	TG-S10
C140	1-900001-013	Capacitor, fixed, plastic, 0.1 μF, ±20%, 250 V dc	73445	C280AE, 0.1 μF
C141	1-900001-013	Capacitor, fixed, plastic, 0.1 μF, ±20%, 250 V dc	73445	C280AE, 0.1 μF
C142	1-900001-013	Capacitor, fixed, plastic, 0.1 μF, ±20%, 250 V dc	73445	C280AE, 0.1 μF
C143	1-900077-002	Capacitor, fixed, ceramic, 0.01 μF, ±20%, 100 V dc	56289	TG-S10
C144	1-900001-013	Capacitor, fixed, plastic, 0.1 μF, ±20%, 250 V dc	73445	C280AE, 0.1 μF
J1	1-950031-003	Connector, jack, 1 pin	00779	2-332070-5
J2	1-950031-003	Connector, jack, 3 pins	00779	2-332070-5
J3	1-950031-003	Connector, jack, 3 pins	00779	2-332070-5
J4	1-950031-003	Connector, jack, 3 pins	00779	2-332070-5
J5	1-950031-003	Connector, jack, 3 pins	00779	2-332070-5
J6	1-950031-003	Connector, jack, 3 pins	00779	2-332070-5
J7	1-950031-003	Connector, jack, 1 pin	00779	2-332070-5
J8	1-950031-003	Connector, jack, 3 pins	00779	2-332070-5

Table 8-10. Parts List for Fixed Frequency Generator Assembly, A3A1 (Cont.)

Ref. Desig.	Singer Part No.	Description	Mfr. Code No.	Mfr. Part No.
J9	1-950031-003	Connector, jack, 3 pins	00779	2-332070-5
J10	1-950031-003	Connector, jack, 3 pins	00779	2-332070-5
J11	1-950031-003	Connector, jack, 3 pins	00779	2-332070-5
J12	1-950031-003	Connector, jack, 3 pins	00779	2-332070-5
J13		Not used		
J14	1-950031-003	Connector, jack, 3 pins	00779	2-332070-5
J15	1-950031-003	Connector, jack, 3 pins	00779	2-332070-5
J16	1-950031-003	Connector, jack, 3 pins	00779	2-332070-5
J17	1-950031-003	Connector, jack, 3 pins	00779	2-332070-5
J18	1-950031-003	Connector, jack, 3 pins	00779	2-332070-5
J19	1-950031-003	Connector, jack, 3 pins	00779	2-332070-5
J20	1-950031-003	Connector, jack, 3 pins	00779	2-332070-5
J21	1-950031-003	Connector, jack, 3 pins	00779	2-332070-5
J22	1-950031-003	Connector, jack, 3 pins	00779	2-332070-5
J23	1-950031-003	Connector, jack, 3 pins	00779	2-332070-5
J24	1-950031-003	Connector, jack, 1 pin	00779	1-332070-5
J25	1-950031-003	Connector, jack, 1 pin	00779	2-332070-5
J26	1-950031-003	Connector, jack, 1 pin	00779	2-332070-5
L1	2-403855-002	Inductor, variable, 1.28 μH to 1.73 μH	88869	
L2	2-403855-002	Inductor, variable, 1.28 μH to 1.73 μH	88869	
L3	1-906043-029	Inductor, fixed, 22 μH, ±10%, 240 mA	81564	4029
L4	2-403855-002	Inductor, variable, 1.28 μH to 1.73 μH	88869	
L5	1-906043-037	Inductor, fixed, 100 μH, ±10%, 140 mA	81564	4037
L6	2-403855-002	Inductor, variable, 1.28 μH to 1.73 μH	88869	
L7	2-403855-002	Inductor, variable, 1.28 μH to 1.73 μH	88869	
L8	1-906043-029	Inductor, fixed, 22 μH, ±10%, 240 mA	81564	4029
L9	2-403855-002	Inductor, variable, 1.28 μH to 1.73 μH	88869	
L10	1-906043-029	Inductor, fixed, 22 μH, ±10%, 240 mA	81564	4029
L11	1-906043-037	Inductor, fixed, 100 μH, ±10%, 140 mA	81564	4037
L12	2-403855-002	Inductor, variable, 1.28 μH to 1.73 μH	88869	
L13	2-403855-002	Inductory, variable, 1.28 μH to 1.73 μH	88869	

Table 8-10. Parts List for Fixed Frequency Generator Assembly, A3A1 (Cont.)

Ref. Desig.	Singer Part No.	Description	Mfr. Code No.	Mfr. Part No.
L14	1-906043-029	Inductor, fixed, 22 μH, ±10%, 240 mA	81564	4029
L15	2-403855-002	Inductor, variable, 1.28 μH to 1.73 μH	88869	
L16	1-906043-029	Inductor, fixed, 22 μH, ±10%, 240 mA	81564	4029
L17	1-906043-029	Inductor, fixed, 22 μH, ±10%, 240 mA	81564	4029
L18	1-906043-028	Inductor, fixed, 18 μH, ±10%, 595 mA	81564	4028
L19	1-906043-029	Inductor, fixed, 22 μH, ±10%, 240 mA	81564	4029
L20	1-906043-028	Inductor, fixed, 18 μH, ±10%, 595 mA	81564	4028
L21	1-906043-036	Inductor, fixed, 82 μH, ±10%, 145 mA	81546	4036
L22	1-906043-036	Inductor, fixed, 82 μH, ±10%, 145 mA	81564	4036
L23	1-906043-033	Inductor, fixed, 47 μH, ±10%, 195 mA	81564	4033
L24	2-403855-002	Inductor, variable, 1.28 μH to 1.73 μH	88869	
L25	2-403855-002	Inductor, variable, 1.28 μH to 1.73 μH	88869	
L26	1-906043-029	Inductor, fixed, 22 μH, ±10%, 240 mA	81564	4029
L27	2-403855-002	Inductor, variable, 1.28 μH to 1.73 μH	88869	
L28	1-906043-029	Inductor, fixed, 22 μH, ±10%, 240 mA	81564	4029
L29	1-906043-029	Inductor, fixed, 22 μH, ±10%, 240 mA	81564	4029
L30	2-403855-002	Inductor, variable, 1.28 μH to 1.73 μH	88869	
L31	1-906043-033	Inductor, fixed, 47 μH, ±10%, 195 mA	81564	4033
L32	1-906043-033	Inductor, fixed, 47 μH, ±10%, 195 mA	81564	4033
L33	1-906043-031	Inductor, fixed, 33 μH, ±10%, 215 mA	81564	4031
L34	2-403855-002	Inductor, variable, 1.28 μH to 1.73 μH	88869	
L35	2-403855-002	Inductor, variable, 1.28 μH to 1.73 μH	88869	
L36	1-906043-029	Inductor, fixed, 22 μH, ±10%, 240 mA	81564	4029
L37	2-403855-002	Inductor, variable, 1.28 μH to 1.73 μH	88869	

Table 8-10. Parts List for Fixed Frequency Generator Assembly, A3A1 (Cont.)

Ref. Desig.	Singer Part No.	Description	Mfr. Code No.	Mfr. Part No.
L38	1-906043-029	Inductor, fixed, 22 μH, ±10%, 240 mA	81564	4029
L39		Not used		
L40	2-403855-002	Inductor, variable, 1.28 μH to 1.73 μH	88869	
L41	2-403855-002	Inductor, variable, 1.28 μH to 1.73 μH	88869	
L42	1-906043-029	Inductor, fixed, 22 μH, ±10%, 240 mA	81564	4029
L43	2-403855-002	Inductor, variable, 1.28 μH to 1.73 μH	88869	
L44	1-906043-029	Inductor, fixed 22 μH, ±10%, 240 mA	81564	4029
L45	1-906043-029	Inductor, fixed, 22 μH, ±10%, 240 mA	81564	4029
L46	1-906043-029	Inductor, fixed, 22 μH, ±10%, 240 mA	81564	4029
L47	1-906043-029	Inductor, fixed, 22 μH, ±10%, 240 mA	81564	4029
L48	1-906043-031	Inductor, fixed, 33 μH, ±10%, 215 mA	81564	4031
L49	1-906043-029	Inductor, fixed, 22 μH, ±10%, 240 mA	81564	4029
L50	1-906043-030	Inductor, fixed, 27 μH, ±10%, 230 mA	81564	4030
L51	1-906043-030	Inductor, fixed, 27 μH, ±10%, 230 mA	81564	4030
L52	1-906043-030	Inductor, fixed, 27 μH, ±10%, 230 mA	81564	4030
L53	1-906043-034	Inductor, fixed 56 μH, ±10%, 185 mA	81564	4034
L54	1-906043-037	Inductor, fixed, 100 μH, ±10%, 140 mA	81564	4037
L55	2-403855-002	Inductor, variable, 1.28 μH to 1.73 μH	88869	
L56	1-906043-031	Inductor, fixed, 33 μH, ±10%, 215 mA	81564	4031
L57	1-906043-029	Inductor, fixed, 22 μH, ±10%, 240 mA	81564	4029
L58	1-906043-029	Inductor, fixed, 22 μH, ±10%, 240 mA	81564	4029
L59	1-906043-029	Inductor, fixed, 22 μH, ±10%, 240 mA	81564	4029
L60	1-906043-031	Inductor, fixed, 33 μH, ±10%, 215 mA	81564	4031
Q1	1-958000-001	Transistor, silicon, NPN	04713	2N3904-5
Q2	1-958000-002	Transistor, silicon, PNP	04713	2N3906-5
Q3	1-958000-001	Transistor, silicon, NPN	04713	2N3904-5

Table 8-10. Parts List for Fixed Frequency Generator Assembly A3A1 (Cont.)

Ref. Desig.	Singer Part No.	Description	Mfr. Code No.	Mfr. Part No.
Q4	1-958000-001	Transistor, silicon, NPN	04713	2N3904-5
Q5	1-958000-002	Transistor, silicon, PNP	04713	2N3906-5
Q6	1-958000-001	Transistor, silicon, NPN	04713	2N3904-5
Q7	1-958000-001	Transistor, silicon, NPN	04713	2N3904-5
Q8	1-958000-001	Transistor, silicon, NPN	04713	2N3904-5
Q9	1-958000-001	Transistor, silicon, NPN	04713	2N3904-5
Q10	1-958000-001	Transistor, silicon, NPN	04713	2N3904-5
Q11	1-958000-002	Transistor, silicon, PNP	04713	2N3906-5
Q12	1-958000-001	Transistor, silicon, NPN	04713	2N3904-5
Q13	1-958000-001	Transistor, silicon, NPN	04713	2N3904-5
Q14	1-958000-001	Transistor, silicon, NPN	04713	2N3904-5
Q15	1-958000-001	Transistor, silicon, NPN	04713	2N3904-5
Q16	1-958000-001	Transistor, silicon, NPN	04713	2N3904-5
Q17	1-958000-001	Transistor, silicon, NPN	04713	2N3904-5
Q18	1-958000-001	Transistor, silicon, NPN	04713	2N3904-5
Q19	1-958000-001	Transistor, silicon, NPN	04713	2N3904-5
Q20	1-958000-001	Transistor, silicon, NPN	04713	2N3904-5
Q21	1-958000-002	Transistor, silicon, PNP	04713	2N3906-5
Q22	1-958000-001	Transistor, silicon, NPN	04713	2N3904-5
Q23	1-958000-001	Transistor, silicon, NPN	04713	2N3904-5
Q24	1-958000-001	Transistor, silicon, NPN	04713	2N3904-5
Q25	1-958000-001	Transistor, silicon, NPN	04713	2N3904-5
Q26	1-958000-001	Transistor, silicon, NPN	04713	2N3904-5
Q27	1-958000-001	Transistor, silicon, NPN	04713	2N3904-5
Q28	1-958000-001	Transistor, silicon, NPN	04713	2N3904-5
Q29	1-958000-001	Transistor, silicon, NPN	04713	2N3904-5
Q30	1-958000-001	Transistor, silicon, NPN	04713	2N3904-5
Q31	1-958000-001	Transistor, silicon, NPN	04713	2N3904-5
Q32	1-958000-002	Transistor, silicon, PNP	04713	2N3906-5
Q33	1-958000-001	Transistor, silicon, NPN	04713	2N3904-5
Q34		Not used		
Q35	1-958000-001	Transistor, silicon, NPN	04713	2N3904-5
Q36	1-958000-002	Transistor, silicon, PNP	04713	2N3906-5
Q37	1-958000-001	Transistor, silicon, NPN	04713	2N3904-5
Q38	1-958000-001	Transistor, silicon, NPN	04713	2N3904-5
Q39	1-958000-001	Transistor, silicon, NPN	04713	2N3904-5
Q40	1-958000-001	Transistor, silicon, NPN	04713	2N3904-5
Q41	1-958000-001	Transistor, silicon, NPN	04713	2N3904-5
Q42	1-958000-001	Transistor, silicon, NPN	04713	2N3904-5
Q43	1-958000-001	Transistor, silicon, NPN	04713	2N3904-5
Q44	1-958000-001	Transistor, silicon, NPN	04713	2N3904-5
Q45	1-958000-001	Transistor, silicon, NPN	04713	2N3904-5

Table 8-10. Parts List for Fixed Frequency Generator Assembly, A3A1 (Cont.)

Ref. Desig.	Singer Part No.	Description	Mfr. Code No.	Mfr. Part No.
Q46	1-958000-001	Transistor, silicon, NPN	04713	2N3904-5
Q47	1-958000-001	Transistor, silicon, NPN	04713	2N3904-5
Q48	1-958000-001	Transistor, silicon, NPN	04713	2N3904-5
Q49	1-958000-001	Transistor, silicon, NPN	04713	2N3904-5
Q50	1-958000-001	Transistor, silicon, NPN	04713	2N3904-5
Q51	1-958000-001	Transistor, silicon, NPN	04713	2N3904-5
Q52	1-958000-001	Transistor, silicon, NPN	04713	2N3904-5
Q53	1-958000-001	Transistor, silicon, NPN	04713	2N3904-5
Q54	1-958000-001	Transistor, silicon, NPN	04713	2N3904-5
R1	1-945000-025	Resistor, fixed, composition, 100 ohm, ±10%, 1/4 W	01121	CB1011
R2	1-945000-047	Resistor, fixed, composition, 6.8 kilohm, ±10%, 1/4 W	01121	CB6821
R3	1-945160-104	Resistor, variable, cermet, 500 ohm, ±20%, 1/4 W	32997	3352W501
R4	1-945000-175	Resistor, fixed, composition, 3.6 kilohm, ±5%, 1/4 W	01121	CB3625
R5	1-945000-047	Resistor, fixed, composition, 6.8 kilohm, ±10%, 1/4 W	01121	CB6821
R6	1-945000-048	Resistor, fixed, composition, 8.2 kilohm, ±10%, 1/4 W	01121	CB8221
R7	1-945000-050	Resistor, fixed, composition, 12 kilohm, ±10%, 1/4 W	01121	CB1231
R8	1-945000-035	Resistor, fixed, composition, 680 ohm, ±10%, 1/4 W	01121	CB6811
R9	1-945000-171	Resistor, fixed, composition, 2.4 kilohm, ±5%, 1/4 W	01121	CB2425
R10	1-945000-154	Resistor, fixed, composition, 470 ohm, ±5%, 1/4 W	01121	CB4715
R11	1-945000-025	Resistor, fixed, composition, 100 ohm, ±10%, 1/4 W	01121	CB1011
R12	1-945000-047	Resistor, fixed, composition, 6.8 kilohm, ±10%, 1/4 W	01121	CB6821
R13	1-945160-104	Resistor, variable, cermet, 500 ohm, ±20%, 1/4 W	32997	3352W501
R14	1-945000-175	Resistor, fixed, composition, 3.6 kilohm, ±5%, 1/4 W	01121	CB3625
R15	1-945000-047	Resistor, fixed, composition, 6.8 kilohm, ±10%, 1/4 W	01121	CB6821
R16	1-945000-045	Resistor, fixed, composition, 4.7 kilohm, ±10%, 1/4 W	01121	CB4721
R17	1-945000-183	Resistor, fixed, composition, 7.5 kilohm, ±5%, 1/4 W	01121	CB7525
R18	1-945000-186	Resistor, fixed, composition, 10 kilohm, ±5%, 1/4 W	01121	CB1035
R19	1-945000-036	Resistor, fixed, composition, 820 ohm, ±10%, 1/4 W	01121	CB8211

Table 8-10. Parts List for Fixed Frequency Generator Assembly, A3A1 (Cont.)

Ref. Desig.	Singer Part No.	Description	Mfr. Code No.	Mfr. Part No.
R20	1-945000-029	Resistor, fixed, composition, 220 ohm, ±10%, 1/4 W	01121	CB2211
R21	1-945000-029	Resistor, fixed, composition, 220 ohm, ±10%, 1/4 W	01121	CB2211
R22	1-945000-035	Resistor, fixed, composition, 680 ohm, ±10%, 1/4 W	01121	CB6811
R23	1-945000-035	Resistor, fixed, composition 680 ohm, ±10%, 1/4 W	01121	CB6811
R24	1-945000-048	Resistor, fixed, composition, 8.2 kilohm, ±10%, 1/4 W	01121	CB8221
R25	1-945000-050	Resistor, fixed, composition, 12 kilohm, ±10%, 1/4 W	01121	CB1231
R26	1-945000-035	Resistor, fixed, composition, 680 ohm, ±10%, 1/4 W	01121	CB6811
R27	1-945000-171	Resistor, fixed, composition 2.4 kilohm, ±5%, 1/4 W	01121	CB2425
R28	1-945000-154	Resistor, fixed, composition, 470 ohm, ±5%, 1/4 W	01121	CB4715
R29	1-945000-025	Resistor, fixed, composition, 100 ohm, ±10%, 1/4 W	01121	CB1011
R30	1-945000-047	Resistor, fixed, composition, 6.8 kilohm, ±10%, 1/4 W	01121	CB6821
R31	1-945000-175	Resistor, fixed, composition, 3.6 kilohm, ±5%, 1/4 W	01121	CB3625
R32	1-945160-104	Resistor, variable, cermet, 500 ohms, ±20%, 1/4 W	32997	3352W501
R33	1-945000-047	Resistor, fixed, composition 6.8 kilohm, ±10%, 1/4 W	01121	CB6821
R34	1-945000-045	Resistor, fixed, composition 4.7 kilohm, ±10%, 1/4 W	01121	CB4721
R35	1-945000-183	Resistor, fixed, composition, 7.5 kilohm, ±5%, 1/4 W	01121	CB7525
R36	1-945000-186	Resistor, fixed, composition 10 kilohm, ±5%, 1/4 W	01121	CB1035
R37	1-945000-036	Resistor, fixed, composition, 820 ohm, ±10%, 1/4 W	01121	CB8211
R38	1-945000-029	Resistor, fixed, composition, 220 ohm, ±10%, 1/4 W	01121	CB2211
R39	1-945000-029	Resistor, fixed, composition, 220 ohm, ±10%. 1/4 W	01121	CB2211
R40	1-945000-029	Resistor, fixed, composition 220 ohm, ±10%, 1/4 W	01121	CB2211
R41	1-945000-029	Resistor, fixed, composition, 220 ohm, ±10%, 1/4 W	01121	CB2211
R42	1-945000-035	Resistor, fixed, composition, 680 ohm, ±10%, 1/4 W	01121	CB6811
R43	1-945000-035	Resistor, fixed, composition, 680 ohm, ±10%, 1/4 W	01121	CB6811
R44	1-945000-035	Resistor, fixed, composition, 680 ohm, ±10%, 1/4 W	01121	CB6811

Table 8-10. Parts List for Fixed Frequency Generator Assembly, A3A1 (Cont.)

Ref. Desig.	Singer Part No.	Description	Mfr. Code No.	Mfr. Part No.
R45	1-945000-035	Resistor, fixed, composition, 680 ohm, ±10%, 1/4 W	01121	CB6811
R46	1-945000-025	Resistor, fixed, composition, 100 ohm, ±10%, 1/4 W	01121	CB1011
R47	1-945000-025	Resistor, fixed, composition, 100 ohm, ±10%, 1/4 W	01121	CB1011
R48	1-945000-033	Resistor, fixed, composition 470 ohm, ±10%, 1/4 W	01121	CB4711
R49	1-945000-032	Resistor, fixed, composition 390 ohm, ±10%, 1/4 W	01121	CB3911
R50	1-945000-169	Resistor, fixed, composition, 2 kilohm, ±5%, 1/4 W	01121	CB2025
R51	1-945000-164	Resistor, fixed, composition, 1.2 kilohm, ±5%, 1/4 W	01121	CB1225
R52	1-945000-164	Resistor, fixed, composition, 1.2 kilohm, ±5%, 1/4 W	01121	CB1225
R53	1-945000-169	Resistor, fixed, composition, 2 kilohm, ±5%, 1/4 W	01121	CB2025
R54	1-945160-105	Resistor, variable, cermet, 1 kilohm, ±20%, 1/4 W	32997	3352W102
R55	1-945160-105	Resistor, variable, cermet, 1 kilohm, ±20%, 1/4 W	32997	3352W102
R56	1-945000-048	Resistor, fixed, composition, 8.2 kilohm, ±10%, 1/4 W	01121	CB8221
R57	1-945000-050	Resistor, fixed, composition, 12 kilohm, ±10%, 1/4 W	01121	CB1231
R58	1-945000-035	Resistor, fixed, composition, 680 ohm, ±10%, 1/4 W	01121	CB6811
R59	1-945000-171	Resistor, fixed, composition, 2.4 kilohm, ±5%, 1/4 W	01121	CB2425
R60	1-945000-154	Resistor, fixed, composition, 470 ohm, ±5%, 1/4 W	01121	CB4715
R61	1-945000-047	Resistor, fixed, composition, 6.8 kilohm, ±10%, 1/4 W	01121	CB6821
R62	1-945000-025	Resistor, fixed, composition, 100 ohm, ±10%, 1/4 W	01121	CB1011
R63	1-945000-175	Resistor, fixed, composition, 3.6 kilohm, ±5%, 1/4 W	01121	CB3625
R64	1-945160-104	Resistor, variable, cermet, 500 ohm, ±20%, 1/4 W	32997	3352W501
R65	1-945000-047	Resistor, fixed, composition, 6.8 kilohm, ±10%, 1/4 W	01121	CB6821
R66	1-945000-045	Resistor, fixed, composition, 4.7 kilohm, ±10%, 1/4 W	01121	CB4721
R67	1-945000-025	Resistor, fixed, composition 100 ohm, ±10%, 1/4 W	01121	CB1011
R68	1-945000-025	Resistor, fixed, composition, 100 ohm, ±10%, 1/4 W	01121	CB1011

Table 8-10. Parts List for Fixed Frequency Generator Assembly, A3A1 (Cont.)

Ref. Desig.	Singer Part No.	Description	Mfr. Code No.	Mfr. Part No.
R69	1-945000-057	Resistor, fixed, composition, 47 kilohm, ±10%, 1/4 W	01121	CB4731
R70	1-945000-033	Resistor, fixed, composition, 470 ohm, ±10%, 1/4 W	01121	CB4711
R71	1-945000-032	Resistor, fixed, composition 390 ohm, ±10%, 1/4 W	01121	CB3911
R72	1-945000-162	Resistor, fixed, composition, 1 kilohm, ±5%, 1/4 W	01121	CB1025
R73	1-945000-164	Resistor, fixed, composition 1.2 kilohm, ±5%, 1/4 W	01121	CB1225
R74	1-945000-169	Resistor, fixed, composition, 2 kilohm, ±5%, 1/4 W	01121	CB2025
R75	1-945160-105	Resistor, variable, cermet, 1 kilohm, ±20%, 1/4 W	32997	3352W102
R76	1-945160-105	Resistor, variable, cermet, 1 kilohm, ±20%, 1/4 W	32997	3352W102
R77	1-945000-183	Resistor, fixed, composition, 7.5 kilohm, ±5%, 1/4 W	01121	CB7525
R78	1-945000-186	Resistor, fixed, composition, 10 kilohm, ±5%, 1/4 W	01121	CB1035
R79	1-945000-036	Resistor, fixed, composition, 820 ohm, ±10%, 1/4 W	01121	CB8211
R80	1-945000-029	Resistor, fixed, composition, 220 ohm, ±10%, 1/4 W	01121	CB2211
R81	1-945000-029	Resistor, fixed, composition, 220 ohm, ±10%, 1/4 W	01121	CB2211
R82	1-945000-029	Resistor, fixed, composition, 220 ohm, ±10%, 1/4 W	01121	CB2211
R83	1-945000-029	Resistor, fixed, composition, 220 ohm, ±10%, 1/4 W	01121	CB2211
R84	1-945000-035	Resistor, fixed, composition, 680 ohm, ±10%, 1/4 W	01121	CB6811
R85	1-945000-035	Resistor, fixed, composition, 680 ohm, ±10%, 1/4 W	01121	CB6811
R86	1-945000-035	Resistor, fixed, composition, 680 ohm, ±10%, 1/4 W	01121	CB6811
R87	1-945000-035	Resistor, fixed, composition, 680 ohm, ±10%, 1/4 W	01121	CB6811
R88	1-945000-041	Resistor, fixed, composition, 2.2 kilohm, ±10%, 1/4 W	01121	CB2221
R89	1-945000-041	Resistor, fixed, composition, 2.2 kilohm, ±10%, 1/4 W	01121	CB2221
R90	1-945000-032	Resistor, fixed, composition, 390 ohm, ±10%, 1/4 W	01121	CB3911
R91	1-945000-032	Resistor, fixed, composition, 390 ohm, ±10%, 1/4 W	01121	CB3911
R92	1-945000-035	Resistor, fixed, composition, 680 ohm, ±10%, 1/4 W	01121	CB6811

Table 8-10. Parts List for Fixed Frequency Generator Assembly, A3A1 (Cont.)

Ref. Desig.	Singer Part No.	Description	Mfr. Code No.	Mfr. Part No.
R93	1-945000-035	Resistor, fixed, composition, 680 ohm, ±10%, 1/4 W	01121	CB6811
R94	1-945000-047	Resistor, fixed, composition, 6.8 kilohm, ±10%, 1/4 W	01121	CB6821
R95	1-945000-025	Resistor, fixed, composition, 100 ohm, ±10%, 1/4 W	01121	CB1011
R96	1-945000-175	Resistor, fixed, composition, 3.6 kilohm, ±5%, 1/4 W	01121	CB3625
R97	1-945160-104	Resistor, variable, cermet, 500 ohm, ±20%, 1/4 W	32997	3352W501
R98	1-945000-047	Resistor, fixed, composition, 6.8 kilohm, ±10%, 1/4 W	01121	CB6821
R99	1-945000-045	Resistor, fixed, composition, 4.7 kilohm, ±10%, 1/4 W	01121	CB4721
R100	1-945000-048	Resistor, fixed, composition, 8.2 kilohm, ±10%, 1/4 W	01121	CB8221
R101	1-945000-050	Resistor, fixed, composition, 12 kilohm, ±10%, 1/4 W	01121	CB1231
R102	1-945000-035	Resistor, fixed, composition, 680 ohm, ±10%, 1/4 W	01121	CB6811
R103	1-945000-171	Resistor, fixed, composition, 2.4 kilohm, ±5%, 1/4 W	01121	CB2425
R104	1-945000-154	Resistor, fixed, composition, 470 ohm, ±5%, 1/4 W	01121	CB4715
R105		Not used		
R106		Not used		
R107		Not used		
R108		Not used		
R109	1-945000-047	Resistor, fixed, composition, 6.8 kilohm, ±10%, 1/4 W	01121	CB6821
R110	1-945000-025	Resistor, fixed, composition, 100 ohm, ±10%, 1/4 W	01121	CB1011
R111	1-945000-175	Resistor, fixed, composition, 3.6 kilohm, ±5%, 1/4 W	01121	CB3625
R112	1-945160-104	Resistor, variable, cermet, 500 ohm, ±20%, 1/4 W	32997	3352W501
R113	1-945000-047	Resistor, fixed, composition, 6.8 kilohm, ±10%, 1/4 W	01121	CB6821
R114	1-945000-045	Resistor, fixed, composition, 4.7 kilohm, ±10%, 1/4 W	01121	CB4721
R115	1-945000-183	Resistor, fixed, composition, 7.5 kilohm, ±5%, 1/4 W	01121	CB7525
R116	1-945000-186	Resistor, fixed, composition, 10 kilohm, ±5%, 1/4 W	01121	CB1035
R117	1-945000-036	Resistor, fixed, composition, 820 ohm, ±10%, 1/4 W	01121	CB8211
R118	1-945000-029	Resistor, fixed, composition, 220 ohm, ±10%, 1/4 W	01121	CB2211

Table 8-10. Parts List for Fixed Frequency Generator Assembly, A3A1 (Cont.)

Ref. Desig.	Singer Part No.	Description	Mfr. Code No.	Mfr. Part No.
R119	1-945000-029	Resistor, fixed, composition, 220 ohm, ±10%, 1/4 W	01121	CB2211
R120	1-945000-029	Resistor, fixed, composition, 220 ohm, ±10%, 1/4 W	01121	CB2211
R121	1-945000-029	Resistor, fixed, composition, 220 ohm, ±10%, 1/4 W	01121	CB2211
R122	1-945000-035	Resistor, fixed, composition, 680 ohm, ±10%, 1/4 W	01121	CB6811
R123	1-945000-035	Resistor, fixed, composition, 680 ohm, ±10%, 1/4 W	01121	CB6811
R124	1-945000-035	Resistor, fixed, composition, 680 ohm, ±10%, 1/4 W	01121	CB6811
R125	1-945000-035	Resistor, fixed, composition, 680 ohm, ±10%, 1/4 W	01121	CB6811
R126	1-945000-025	Resistor, fixed, composition, 100 ohm, ±10%, 1/4 W	01121	CB1011
R127	1-945000-025	Resistor, fixed, composition, 100 ohm, ±10%, 1/4 W	01121	CB1011
R128	1-945000-033	Resistor, fixed, composition, 470 ohm, ±10%, 1/4 W	01121	CB4711
R129	1-945000-057	Resistor, fixed, composition, 47 kilohm, ±10%, 1/4 W	01121	CB4731
R130	1-945000-032	Resistor, fixed, composition, 390 ohm, ±10%, 1/4 W	01121	CB3911
R131	1-945000-151	Resistor, fixed, composition, 360 ohm, ±5%, 1/4 W	01121	CB3615
R132	1-945000-169	Resistor, fixed, composition, 2 kilohm, ±5%, 1/4 W	01121	CB2025
R133	1-945160-105	Resistor, variable, cermet, 1 kilohm, ±20%, 1/4 W	32997	3352W102
R134	1-945000-041	Resistor, fixed, composition, 2.2 kilohm, ±10%, 1/4 W	01121	CB2221
R135	1-945000-032	Resistor, fixed, composition, 390 ohm, ±10%, 1/4 W	01121	CB3911
R136	1-945000-032	Resistor, fixed, composition, 390 ohm, ±10%, 1/4 W	01121	CB3911
R137	1-945000-041	Resistor, fixed, composition, 2.2 kilohm, ±10%, 1/4 W	01121	CB2221
R138	1-945000-035	Resistor, fixed, composition, 680 ohm, ±10%, 1/4 W	01121	CB6811
R139	1-945000-035	Resistor, fixed, composition, 680 ohm, ±10%, 1/4 W	01121	CB6811
R140	1-945000-025	Resistor, fixed, composition, 100 ohm, ±10%, 1/4 W	01121	CB1011
R141	1-945000-025	Resistor, fixed, composition, 100 ohm, ±10%, 1/4 W	01121	CB1011
R142	1-945000-033	Resistor, fixed, composition, 470 ohm, ±10%, 1/4 W	01121	CB4711
R143	1-945000-057	Resistor, fixed, composition, 47 kilohm, ±10%, 1/4 W	01121	CB4731

Table 8-10. Parts List for Fixed Frequency Generator Assembly, A3A1 (Cont.)

Ref. Desig.	Singer Part No.	Description	Mfr. Code No.	Mfr. Part No.
R144	1-945000-032	Resistor, fixed, composition, 390 ohm, ±10%, 1/4 W	01121	CB3911
R145	1-945000-164	Resistor, fixed, composition, 1.2 kilohm, ±5%, 1/4 W	01121	CB1225
R146	1-945000-164	Resistor, fixed, composition, 1.2 kilohm, ±5%, 1/4 W	01121	CB1225
R147	1-945160-105	Resistor, variable, cermet, 1 kilohm, ±20%, 1/4 W	32997	3352W102
R148	1-945000-193	Resistor, fixed, composition, 20 kilohm, ±5%, 1/4 W	01121	CB2035
R149	1-945160-105	Resistor, variable, cermet, 1 kilohm, ±20%, 1/4 W	32997	3352W102
R150	1-945000-041	Resistor, fixed, composition, 2.2 kilohm, ±10%, 1/4 W	01121	CB2221
R151	1-945000-041	Resistor, fixed, composition, 2.2 kilohm, ±10%, 1/4 W	01121	CB2221
R152	1-945000-035	Resistor, fixed, composition, 680 ohm, ±10%, 1/4 W	01121	CB6811
R153	1-945000-162	Resistor, fixed, film, 1 kilohm, ±5%, 1/4 W	01121	CB1025
R154	1-945160-105	Resistor, variable, cermet, 1 kilohm, ±20%, 1/4 W	32997	3352W102
R155	1-945000-041	Resistor, fixed, composition, 2.2 kilohm, ±10%, 1/4 W	01121	CB2221
R156	1-945000-041	Resistor, fixed, composition, 2.2 kilohm, ±10%, 1/4 W	01121	CB2221
R157	1-945000-032	Resistor, fixed, composition, 390 ohm, ±10%, 1/4 W	01121	CB3911
R158	1-945000-032	Resistor, fixed, composition, 390 ohm, ±10%, 1/4 W	01121	CB3911
R159	1-945000-035	Resistor, fixed, composition, 680 ohm, ±10%, 1/4 W	01121	CB6811
R160	1-945000-035	Resistor, fixed, composition, 680 ohm, ±10%, 1/4 W	01121	CB6811
R161	1-945000-025	Resistor, fixed, composition, 100 ohm, ±10%, 1/4 W	01121	CB1011
R162	1-945000-025	Resistor, fixed, composition, 100 ohm, ±10%, 1/4 W	01121	CB1011
R163	1-945000-033	Resistor, fixed, composition, 470 ohm, ±10%, 1/4 W	01121	CB4711
R164	1-945000-057	Resistor, fixed, composition, 47 kilohm, ±10%, 1/4 W	01121	CB4731
R165	1-945000-032	Resistor, fixed, composition, 390 ohm, ±10%, 1/4 W	01121	CB3911
R166	1-945000-164	Resistor, fixed, composition, 1.2 kilohm, ±5%, 1/4 W	01121	CB1225
R167	1-945000-169	Resistor, fixed, composition, 2 kilohm, ±5%, 1/4 W	01121	CB2025

Table 8-10. Parts List for Fixed Frequency Generator Assembly, A3A1 (Cont.)

Ref. Desig.	Singer Part No.	Description	Mfr. Code No.	Mfr. Part No.
R168	1-945160-105	Resistor, variable, cermet, 1 kilohm, ±20%, 1/4 W	32997	3352W102
R169	1-945000-041	Resistor, fixed, composition, 2.2 kilohm, ±10%, 1/4 W	01121	CB2221
R170	1-945000-041	Resistor, fixed, composition, 2.2 kilohm, ±10%, 1/4 W	01121	CB2221
R171	1-945000-032	Resistor, fixed, composition, 390 ohm, ±10%, 1/4 W	01121	CB3911
R172	1-945000-032	Resistor, fixed, composition, 390 ohm, ±10%, 1/4 W	01121	CB3911
R173	1-945000-035	Resistor, fixed, composition, 680 ohm, ±10%, 1/4 W	01121	CB6811
R174	1-945000-035	Resistor, fixed, composition, 680 ohm, ±10%, 1/4 W	01121	CB6811
R175	1-945000-045	Resistor, fixed, composition, 4.7 kilohm, ±10%, 1/4 W	01121	CB4721
R176	1-945000-057	Resistor, fixed, composition, 47 kilohm, ±10%, 1/4 W	01121	CB4731
R177	1-945000-164	Resistor, fixed, composition, 1.2 kilohm, ±5%, 1/4 W	01121	CB1225
U1	1-926007-026	Integrated circuit, balanced mixer	01295	SN76514N
U2	1-926007-026	Integrated circuit, balanced mixer	01295	SN76514N
U3	1-926007-014	Integrated circuit, decade counter	01295	SN7490N
U4	1-926007-026	Integrated circuit, balanced mixer	01295	SN76514N
U5	1-926007-026	Integrated circuit, balanced mixer	01295	SN76514N
U6	1-926113-001	Integrated circuit, flip-flop, J-K master/slave	01295	SN7472N
U7	1-926113-001	Integrated circuit, flip-flop, J-K master/slave	01295	SN7472N
U8	1-926007-014	Integrated circuit, decade counter	01295	SN7490N
U9	1-926114-001	Integrated circuit, counter, ÷ by 2 or ÷ by 2 and ÷ by 6	18324	N7492A

Table 8-11. Parts List for 100 kHz Decade and Diode Switch Assembly, A3A2

Ref. Desig.	Singer Part No.	Description	Mfr. Code No.	Mfr. Part No.
C1	1-900001-013	Capacitor, fixed, plastic 0.1 μF, ±20%, 250 V dc	73445	C280AE, 0.1 μF
C2	1-900077-002	Capacitor, fixed, ceramic, 0.01 μF, ±20%, 100 V dc	56289	TG-S10
C3	1-900001-013	Capacitor, fixed, plastic 0.1 μF, ±20%, 250 V dc	73445	C280AE, 0.1 μF
C4	1-900001-013	Capacitor, fixed, plastic 0.1 μF, ±20%, 250 V dc	73445	C280AE, 0.1 μF
C5	1-900077-002	Capacitor, fixed, ceramic, 0.01 μF, ±20%, 100 V dc	56289	TG-S10
C6	1-900077-002	Capacitor, fixed, ceramic, 0.01 μF, ±20%, 100 V dc	56289	TG-S10
C7	1-900098-045	Capacitor, fixed, mica, 390 pF, ±5%, 50 V dc	04062	DM5FY391J
C8	1-900098-045	Capacitor, fixed, mica, 390 pF, ±5%, 50 V dc	04062	DM5FY391J
C9	1-900077-002	Capacitor, fixed, ceramic, 0.01 μF, ±20%, 100 V dc	56289	TG-S10
C10	1-900098-045	Capacitor, fixed, mica, 390 pF, ±5%, 50 V dc	04062	DM5FY391J
C11	1-900001-013	Capacitor, fixed, plastic 0.1 μF, ±20%, 250 V dc	73445	C280AE, 0.1 μF
C12	1-900001-013	Capacitor, fixed, plastic, 0.1 μF, ±20%, 250 V dc	73445	C280AE, 0.1 μF
C13	1-900001-013	Capacitor, fixed, plastic 0.1 μF, ±20%, 250 V dc	73445	C280AE, 0.1 μF
C14	1-900001-013	Capacitor, fixed, plastic, 0.1 μF, ±20%, 250 V dc	73445	C280AE, 0.1 μF
C15	1-900003-054	Capacitor, fixed, mica, 820 pF, ±5%, 300 V dc	72136	DM15821J
C16	1-900071-021	Capacitor, fixed, mica 300 pF, ±5%, 300 V dc	72136	DM10301J
C17	1-900098-010	Capacitor, fixed, mica 12 pF, ±5%, 300 V dc	04062	DM5CC120J
C18	1-900098-038	Capacitor, fixed, mica, 200 pF, ±5%, 100 V dc	04062	DM5FA201J
C19	1-900098-010	Capacitor, fixed, mica, 12 pF, ±5%, 300 V dc	04062	DM5CC120J
C20	1-900071-021	Capacitor, fixed, mica, 300 pF, ±5%, 300 V dc	72136	DM10301J
C21	1-900072-039	Capacitor, fixed, mica, 820 pF, ±5%, 100 V dc	00853	DM10S1D821J0
C22	1-900001-013	Capacitor, fixed, plastic, 0.1 μF, ±20%, 250 V dc	73445	C280AE, 0.1 μF
C23	1-900098-039	Capacitor, fixed, mica, 220 pF, ±5%, 100 V dc	04062	DM5FY221J
C24	1-900077-002	Capacitor, fixed, ceramic, 0.01 μF, ±20%, 100 V dc	56289	TG-S10

Table 8-11. Parts List for 100 kHz Decade and Diode Switch Assembly, A3A2 (Cont.)

Ref. Desig.	Singer Part No.	Description	Mfr. Code No.	Mfr. Part No.
C25	1-900001-013	Capacitor, fixed, plastic, 0.1 μF, ±20%, 250 V dc	73445	C280AE, 0.1μF
C26	1-900077-002	Capacitor, fixed, ceramic, 0.01 μF, ±20%, 100 V dc	56289	TG-S10
C27	1-900077-002	Capacitor, fixed, ceramic, 0.01 μF, ±20%, 100 V dc	56289	TG-S10
C28	1-900012-002	Capacitor, fixed, ceramic, 0.001 μF, +100% -0%, 500 V dc	72982	861Z5U102F
C29	1-900001-013	Capacitor, fixed, plastic, 0.1 μF, ±20%, 250 V dc	73445	C280AE, 0.1μF
C30	1-900001-013	Capacitor, fixed, plastic, 0.1 μF, ±20%, 250 V dc	73445	C280AE, 0.1μF
C31	1-900077-002	Capacitor, fixed, ceramic, 0.01 μF, ±20%, 100 V dc	56289	TG-S10
C32	1-900012-002	Capacitor, fixed, ceramic, 0.001 μF, +100% -0%, 500 V dc	72982	861Z5U102F
C33	1-900001-013	Capacitor, fixed, plastic, 0.1 μF, ±20%, 250 V dc	73445	C280AE, 0.1μF
C34	1-900001-013	Capacitor, fixed, plastic, 0.1 μF, ±20%, 250 V dc	73445	C280AE, 0.1μF
C35	1-900077-002	Capacitor, fixed, ceramic, 0.01 μF, ±20%, 100 V dc	56289	TG-S10
C36	1-900012-002	Capacitor, fixed, ceramic, 0.001 μF, +100% -0%, 500 V dc	72982	861Z5U102F
C37	1-900001-013	Capacitor, fixed, plastic, 0.1 μF, ± 20%, 250 V dc	73445	C280AE, 0.1μF
C38	1-900001-013	Capacitor, fixed, plastic, 0.1 μF, ± 20%, 250 V dc	73445	C280AE, 0.1μF
C39	1-900077-002	Capacitor, fixed, ceramic, 0.01 μF, ±20%, 100 V dc	56289	TG-S10
C40	1-900012-002	Capacitor, fixed, ceramic, 0.001 μF, +100% -0%, 500 V dc	72982	861Z5U102F
C41	1-900001-013	Capacitor, fixed, plastic, 0.1 μF, ±20%, 250 V dc	73445	C280AE, 0.1μF
C42	1-900001-013	Capacitor, fixed, plastic, 0.1 μF, ±20%, 250 V dc	73445	C280AE, 0.1μF
C43	1-900077-002	Capacitor, fixed, ceramic, 0.01 μF, ±20%, 100 V dc	56289	TG-S10
C44	1-900001-013	Capacitor, fixed, plastic, 0.1 μF, ±20%, 250 V dc	73445	C280AE, 0.1μF
C45	1-900077-002	Capacitor, fixed, ceramic, 0.01 μF, ±20%, 100 V dc	56289	TG-S10
C46	1-900077-002	Capacitor, fixed, ceramic, 0.01 μF, ±20%, 100 V dc	56289	TG-S10
C47	1-900077-002	Capacitor, fixed, ceramic, 0.01 μF, ±20%, 100 V dc	56289	TG-S10
C48	1-900001-013	Capacitor, fixed, plastic, 0.1 μF, ±20%, 250 V dc	73445	C280AE, 0.1μF

Table 8-11. Parts List for 100 kHz Decade and Diode Switch Assembly, A3A2 (Cont.)

Ref. Desig.	Singer Part No.	Description	Mfr. Code No.	Mfr. Part No.
C49	1-900001-013	Capacitors, fixed, plastic, 0.1 μF, ±20%, 250 V dc	73445	C280AE, 0.1 μF
C50	1-900077-002	Capacitor, fixed, ceramic, 0.01 μF, ±20%, 250 V dc	56289	TG-S10
C51	1-900077-002	Capacitor, fixed, ceramic, 0.01 μF, ±20%, 100 V dc	56289	TG-S10
C52	1-900001-013	Capacitor, fixed, plastic, 0.1 μF, ±20%, 250 V dc	73445	C280AE, 0.1 μF
C53	1-900001-013	Capacitor, fixed, plastic, 0.1 μF, ±20%, 250 V dc	73445	C280AE, 0.1 μF
C54	1-900077-002	Capacitor, fixed, ceramic, 0.01 μF, ±20%, 100 V dc	56289	TG-S10
C55	1-900077-002	Capacitor, fixed, ceramic, 0.01 μF, ±20%, 100 V dc	56289	TG-S10
C56	1-900001-013	Capacitor, fixed, plastic, 0.1 μF, ±20%, 250 V dc	73445	C280AE, 0.1 μF
C57	1-900001-013	Capacitor, fixed, plastic, 0.1 μF, ±20%, 250 V dc	73445	C280AE, 0.1 μF
C58	1-900077-002	Capacitor, fixed, ceramic, 0.01 μF, ±20%, 100 V dc	56289	TG-S10
C59	1-900001-013	Capacitor, fixed, plastic, 0.1 μF, ±20%, 250 V dc	73445	C280AE, 0.1 μF
C60	1-900077-002	Capacitor, fixed, ceramic, 0.01 μF, ±20%, 100 V dc	56289	TG-S10
C61	1-900001-013	Capacitor, fixed, plastic, 0.1 μF, ±20%, 250 V dc	73445	C280AE, 0.1 μF
C62	1-900001-013	Capacitor, fixed, plastic, 0.1 μF, ±20%, 250 V dc	73445	C280AE, 0.1 μF
C63	1-900001-013	Capacitor, fixed, plastic, 0.1 μF, ±20%, 250 V dc	73445	C280AE, 0.1 μF
C64	1-900001-013	Capacitor, fixed, plastic, 0.1 μF, ±20%, 250 V dc	73445	C280AE, 0.1 μF
C65	1-900077-002	Capacitor, fixed, ceramic, 0.01 μF, ±20%, 100 V dc	56289	TG-S10
C66	1-900098-033	Capacitor, fixed, mica, 120 pF, ±5%, 300 V dc	04062	DM5FC121J
C67	1-900098-033	Capacitor, fixed, mica, 120 pF, ±5%, 300 V dc	04062	DM5FC121J
C68	1-900066-139	Capacitor, fixed, ceramic, 5.1 pF, ±5%, 500 V dc	95121	MC-5.1±5%
C69	1-900066-138	Capacitor, fixed, ceramic, 4.7 pF, ±5%, 500 V dc	95121	MC-4.7±5%
C70	1-900098-027	Capacitor, fixed, mica, 68 pF, ±5%, 300 V dc	04062	DM5EC680J
C71	1-900066-129	Capacitor, fixed, ceramic, 2.2 pF, ±5%, 500 V dc	95121	MC-2.2±5%
C72	1-900098-027	Capacitor, fixed, mica, 68 pF, ±5%, 300 V dc	04062	DM5EC680J

Table 8-11. Parts List for 100 kHz Decade and Diode Switch Assembly, A3A2 (Cont.)

Ref. Desig.	Singer Part No.	Description	Mfr. Code No.	Mfr. Part No.
C73	1-900066-136	Capacitor, fixed, ceramic, 3.9 pF, ±5%, 500 V dc	95121	MC-3.9± 5%
C74	1-900098-027	Capacitor, fixed, mica, 68 pF, ±5%, 300 V dc	04062	DM5-EC680J
C75	1-900098-033	Capacitor, fixed, mica, 120 pF, ±5%, 300 V dc	04062	DM5FC121J
C76	1-900098-033	Capacitor, fixed, 120 pF, ±5%, 300 V dc	04062	DM5FC121J
C77	1-900001-013	Capacitor, fixed, plastic, 0.1 μF, ±20%, 250 V dc	73445	C280AE, 0.1 μF
C78	1-900077-002	Capacitor, fixed, mica, 0.01 μF, ±20%, 100 V dc	56289	TG-S10
C79	1-900077-002	Capacitor, fixed, ceramic, 0.01 μF, ±20%, 100 V dc	56289	TG-S10
C80	1-900098-022	Capacitor, fixed, plastic, 47 pF, ±5%, 300 V dc	04062	DM5EC470J
C81	1-900077-002	Capacitor, fixed, ceramic, 0.01 μF, ±20%, 100 V dc	56289	TG-S10
C82	1-900001-013	Capacitor, fixed, plastic, 0.1 μF, ±20%, 250 V dc	73445	C280AE, 0.1 μF
C83	1-900077-002	Capacitor, fixed, ceramic, 0.01 μF, ±20%, 100 V dc	56289	TG-S10
CR1	1-913005-001	Diode, germanium, Vr = 30 V, If = 100 mA	03877	1N273
CR2	1-913005-001	Diode, germanium, Vr = 30 V, If = 100 mA	03877	1N273
CR3	1-913005-001	Diode, germanium, Vr = 30 V, If = 100 mA	03877	1N273
CR4	1-913005-001	Diode, germanium, Vr = 30 V, If = 100 mA	03877	1N273
CR5	1-913005-001	Diode, germanium, Vr = 30 V, If = 100 mA	03877	1N273
CR6	1-913005-001	Diode, germanium, Vr = 30 V, If = 100 mA	03877	1N273
CR7	1-913005-001	Diode, germanium, Vr = 30 V, If = 100 mA	03877	1N273
CR8	1-913005-001	Diode, germanium, Vr = 30 V, If = 100 mA	03877	1N273
CR9	1-913005-001	Diode, germanium, Vr = 30 V, If = 100 mA	03877	1N273
CR10	1-913005-001	Diode, germanium, Vr = 30 V, If = 100 mA	03877	1N273
CR11	1-913005-001	Diode, germanium, Vr = 30 V, If = 100 mA	03877	1N273
CR12	1-913005-001	Diode, germanium, Vr = 30 V, If = 100 mA	03877	1N273
CR13	1-913005-001	Diode, germanium, Vr = 30 V, If = 100 mA	03877	1N273
CR14	1-913005-001	Diode, germanium, Vr = 30 V, If = 100 mA	03877	1N273

Table 8-11. Parts List for 100 kHz Decade and Diode Switch Assembly, A3A2 (Cont.)

Ref. Desig.	Singer Part No.	Description	Mfr. Code No.	Mfr. Part No.
CR15	1-913005-001	Diode, germanium, Vr = 30 V, If = 100 mA	03877	1N273
CR16	1-913005-001	Diode, germanium, Vr = 30 V, If = 100 mA	03877	1N273
CR17	1-913005-001	Diode, germanium, Vr = 30 V, If = 100 mA	03877	1N273
CR18	1-913005-001	Diode, germanium, Vr = 30 V, If = 100 mA	03877	1N273
CR19	1-913005-001	Diode, germanium, Vr = 30 V, If = 100 mA	03877	1N273
CR20	1-913005-001	Diode, germanium, Vr = 30 V, If = 100 mA	03877	1N273
CR21	1-913005-001	Diode, germanium, Vr = 30 V, If = 100 mA	03877	1N273
CR22	1-913005-001	Diode, germanium, Vr = 30 V, If = 100 mA	03877	1N273
CR23	1-913005-001	Diode, germanium, Vr = 30 V, If = 100 mA	03877	1N273
CR24	1-913005-001	Diode, germanium, Vr = 30 V, If = 100 mA	03877	1N273
CR25	1-913005-001	Diode, germanium, Vr = 30 V, If = 100 mA	03877	1N273
CR26	1-913005-001	Diode, germanium, Vr = 30 V, If = 100 mA	03877	1N273
CR27	1-913005-001	Diode, germanium, Vr = 30 V, If = 100 mA	03877	1N273
J1	1-950031-003	Connector, jack, 1 pin	00779	2-332070-5
J2	1-950031-003	Connector, jack, 3 pins	00779	2-332070-5
J3	1-950031-003	Connector, jack, 1 pin	00779	2-332070-5
J4	1-950031-003	Connector, jack, 3 pins	00779	2-332070-5
J5	1-950031-003	Connector, jack, 1 pin	00779	2-332070-5
J6	1-950031-003	Connector, jack, 3 pins	00779	2-332070-5
J7	1-950031-003	Connector, jack, 1 pin	00779	2-332070-5
J8	1-950031-003	Connector, jack, 3 pins	00779	2-332070-5
J9	1-950031-003	Connector, jack, 1 pin	00779	2-332070-5
J10	1-950031-003	Connector, jack, 3 pins	00779	2-332070-5
J11	1-950031-003	Connector, jack, 1 pin	00779	2-332070-5
J12	1-950031-003	Connector, jack, 3 pins	00779	2-332070-5
J13	1-950031-003	Connector, jack, 1 pin	00779	2-332070-5
J14	1-950031-003	Connector, jack, 3 pins	00779	2-332070-5
J15	1-950031-003	Connector, jack, 1 pin	00779	2-332070-5
J16	1-950031-003	Connector, jack, 3 pins	00779	2-332070-5
J17	1-950031-003	Connector, jack, 1 pin	00779	2-332070-5
J18	1-950031-003	Connector, jack, 3 pins	00779	2-332070-5
J19	1-950031-003	Connector, jack, 3 pins	00779	2-332070-5
L1	1-906043-025	Inductor, fixed, 10 μH, $\pm$10%, 290 mA	81564	4025

Table 8-11. Parts List for 100 kHz Decade and Diode Switch Assembly, A3A2 (Cont.)

Ref. Desig.	Singer Part No.	Description	Mfr. Code No.	Mfr. Part No.
L2	1-906043-054	Inductor, fixed, 2700 μH, ±10%, 38 mA	81564	4054
L3	1-906043-054	Inductor, fixed, 2700 μH, ±10%, 38 mA	81564	4054
L4	1-906043-029	Inductor, fixed, 22 μH, ±10%, 240 mA	81564	4029
L5	1-906043-029	Inductor, fixed, 22 μH, ±10%, 240 mA	81564	4029
L6	2-403855-002	Inductor, variable 1.28 μH to 1.73 μH	88869	
L7	2-403855-002	Inductor, variable, 1.28 μH to 1.73 μH	88869	
L8	2-403855-002	Inductor, variable, 1.28 μH to 1.73 μH	88869	
L9	2-403855-002	Inductor, variable, 1.28 μH to 1.73 μH	88869	
L10	1-906043-046	Inductor, fixed, 560 μH, ±10%, 72 mA	81564	4046
L11	1-906043-046	Inductor, fixed, 560 μH, ±10%, 72 mA	81564	4046
L12	1-906043-046	Inductor, fixed, 560 μH, ±10%, 72 mA	81564	4046
L13	1-906043-046	Inductor, fixed, 560 μH, ±10%, 72 mA	81564	4046
L14	1-906043-042	Inductor, fixed, 270 μH, ±10%, 96 mA	81564	4042
L15	1-906043-042	Inductor, fixed, 270 μH, ±10%, 96 mA	81564	4042
L16	1-906043-042	Inductor, fixed, 270 μH, ±10%, 96 mA	81564	4042
L17	2-403855-001	Inductor, variable, 0.64 μH to 0.86 μH	88869	
L18	2-403855-001	Inductor, variable, 0.64 μH to 0.86 μH	88869	
L19	2-403855-001	Inductor, variable, 0.64 μH to 0.86 μH	88869	
L20	2-403855-001	Inductor, variable, 0.64 μH to 0.86 μH	88869	
L21	2-403855-001	Inductor, variable, 0.64 μH to 0.86 μH	88869	
L22	2-403855-001	Inductor, variable, 0.64 μH to 0.86 μH	88869	
Q1	1-958000-002	Transistor, silicon, PNP	04713	2N3906-5
Q2	1-958000-002	Transistor, silicon, PNP	04713	2N3906-5
Q3	1-958000-002	Transistor, silicon, PNP	04713	2N3906-5
Q4	1-958000-001	Transistor, silicon, NPN	04713	2N3904-5
Q5	1-958000-001	Transistor, silicon, NPN	04713	2N3904-5
Q6	1-958000-001	Transistor, silicon, NPN	04713	2N3904-5

Table 8-11. Parts List for 100 kHz Decade and Diode Switch Assembly, A3A2 (Cont.)

Ref. Desig.	Singer Part No.	Description	Mfr. Code No.	Mfr. Part No.
Q7	1-958000-001	Transistor, silicon, NPN	04713	2N3904-5
Q8	1-958000-002	Transistor, silicon, PNP	04713	2N3906-5
Q9	1-958018-001	Transistor, silicon, NPN	31718	2N5179
R1	1-945000-049	Resistor, fixed, composition, 10 kilohm, ±10%, 1/4 W	01121	CB1031
R2	1-945000-048	Resistor, fixed, composition, 8.2 kilohm, ±10%, 1/4 W	01121	CB8221
R3	1-945000-041	Resistor, fixed, composition, 2.2 kilohm, ±10%, 1/4 W	01121	CB2221
R4	1-945000-046	Resistor, fixed, composition, 5.6 kilohm, ±10%, 1/4 W	01121	CB5621
R5	1-945000-037	Resistor, fixed, composition, 1 kilohm, ±10%, 1/4 W	01121	CB1021
R6	1-945000-036	Resistor, fixed, composition, 820 ohm, ±10%, 1/4 W	01121	CB8211
R7	1-945000-037	Resistor, fixed, composition, 1 kilohm, ±10%, 1/4 W	01121	CB1021
R8	1-945000-037	Resistor, fixed, composition, 1 kilohm, ±10%, 1/4 W	01121	CB1021
R9	1-945000-041	Resistor, fixed, composition, 2.2 kilohm, ±10%, 1/4 W	01121	CB2221
R10	1-945000-164	Resistor, fixed, composition, 1.2 kilohm, ±5%, 1/4 W	01121	CB1225
R11	1-945000-145	Resistor, fixed, composition, 200 ohm, ±5%, 1/4 W	01121	CB2015
R12	1-945000-030	Resistor, fixed, composition, 270 ohm, ±10%, 1/4 W	01121	CB2711
R13	1-945000-030	Resistor, fixed, composition, 270 ohm, ±10%, 1/4 W	01121	CB2711
R14	1-945000-040	Resistor, fixed, composition, 1.8 kilohm, ±10%, 1/4 W	01121	CB1821
R15	1-945000-051	Resistor, fixed, composition, 15 kilohm, ±10%, 1/4 W	01121	CB1531
R16	1-945000-025	Resistor, fixed, composition, 100 ohm, ±10%, 1/4 W	01121	CB1011
R17	1-945000-023	Resistor, fixed, composition, 68 ohm, ±10%, 1/4 W	01121	CB6801
R18	1-945000-041	Resistor, fixed, composition, 2.2 kilohm, ±10%, 1/4 W	01121	CB2221
R19	1-945000-025	Resistor, fixed, composition, 100 ohm, ±10%, 1/4 W	01121	CB1011
R20	1-945000-049	Resistor, fixed, composition, 10 kilohm, ±10%, 1/4 W	01121	CB1031
R21	1-945000-041	Resistor, fixed, composition, 2.2 kilohm,±10%, 1/4 W	01121	CB2221
R22	1-945000-025	Resistor, fixed, composition, 100 ohm, ±10%, 1/4 W	01121	CB1011

Table 8-11. Parts List for 100 kHz Decade and Diode Switch Assembly, A3A2 (Cont.)

Ref. Desig.	Singer Part No.	Description	Mfr. Code No.	Mfr. Part No.
R23	1-945160-001	Resistor, variable, cermet, 100 ohm, ±20%, 1/4 W	32997	3352E101
R24	1-945000-048	Resistor, fixed, composition, 8.2 kilohm, ±10%, 1/4 W	01121	CB8221
R25	1-945000-038	Resistor, fixed, composition, 1.2 kilohm, ±10%, 1/4 W	01121	CB1221
R26	1-945000-038	Resistor, fixed, composition, 1.2 kilohm, ±10%, 1/4 W	01121	CB1221
R27	1-945000-048	Resistor, fixed, composition, 8.2 kilohm, ±10%, 1/4 W	01121	CB8221
R28	1-945000-038	Resistor, fixed, composition, 1.2 kilohm, ±10%, 1/4 W	01121	CB1221
R29	1-945000-048	Resistor, fixed, composition, 8.2 kilohm, ±10%, 1/4 W	01121	CB8221
R30	1-945000-038	Resistor, fixed, composition, 1.2 kilohm, ±10%, 1/4 W	01121	CB1221
R31	1-945000-048	Resistor, fixed, composition, 8.2 kilohm, ±10%, 1/4 W	01121	CB8221
R32	1-945000-038	Resistor, fixed, composition, 1.2 kilohm, ±10%, 1/4 W	01121	CB1221
R33	1-945000-155	Resistor, fixed, composition, 510 ohm, ±5%, 1/4 W	01121	CB5115
R34	1-945000-025	Resistor, fixed, composition, 100 ohm, ±10%, 1/4 W	01121	CB1011
R35	1-945000-025	Resistor, fixed, composition, 100 ohm, ±10%, 1/4 W	01121	CB1011
R36	1-945000-047	Resistor, fixed, composition, 6.8 kilohm, ±10%, 1/4 W	01121	CB6821
R37	1-945000-040	Resistor, fixed, composition, 1.8 kilohm, ±10%, 1/4 W	01121	CB1821
R38	1-945000-025	Resistor, fixed, composition, 100 ohm, ±10%, 1/4 W	01121	CB1011
R39	1-945000-048	Resistor, fixed, composition, 8.2 kilohm, ±10%, 1/4 W	01121	CB8221
R40	1-945000-038	Resistor, fixed, composition, 1.2 kilohm, ±10%, 1/4 W	01121	CB1221
R41	1-945000-038	Resistor, fixed, composition, 1.2 kilohm, ±10%, 1/4 W	01121	CB1221
R42	1-945000-048	Resistor, fixed, composition, 8.2 kilohm, ±10%, 1/4 W	01121	CB8221
R43	1-945000-038	Resistor, fixed, composition, 1.2 kilohm, ±10%, 1/4 W	01121	CB1221
R44	1-945000-048	Resistor, fixed, composition, 8.2 kilohm, ±10%, 1/4 W	01121	CB8221
R45	1-945000-038	Resistor, fixed, composition, 1.2 kilohm, ±10%, 1/4 W	01121	CB1221
R46	1-945000-025	Resistor, fixed, composition, 100 ohm, ±10%, 1/4 W	01121	CB1011

Table 8-11. Parts List for 100 kHz Decade and Diode Switch Assembly, A3A2 (Cont.)

Ref. Desig.	Singer Part No.	Description	Mfr. Code No.	Mfr. Part No.
R47	1-945000-049	Resistor, fixed, composition, 10 kilohm, ±10%, 1/4 W	01121	CB1031
R48	1-945000-041	Resistor, fixed, composition, 2.2 kilohm, ±10%, 1/4 W	01121	CB2221
R49	1-945000-025	Resistor, fixed, composition, 100 ohm, ±10%, 1/4 W	01121	CB1011
R50	1-945000-025	Resistor, fixed, composition, 100 ohm, ±10%, 1/4 W	01121	CB1011
R51	1-945000-047	Resistor, fixed, composition, 6.8 kilohm, ±10%, 1/4 W	01121	CB6821
R52	1-945000-159	Resistor, fixed, composition, 750 ohm, ±5%, 1/4 W	01121	CB7515
R53	1-945000-175	Resistor, fixed, composition, 3.6 kilohm, ±5%, 1/4 W	01121	CB3625
R54	1-945160-002	Resistor, variable, cermet, 200 ohms, ±20%, 1/4 W	32997	3352E201
R55	1-945000-047	Resistor, fixed, composition, 6.8 kilohm, ±10%, 1/4 W	01121	CB6821
R56	1-945000-045	Resistor, fixed, composition, 4.7 kilohm, ±10%, 1/4 W	01121	CB4721
R57	1-945000-025	Resistor, fixed, composition, 100 ohm, ±10%, 1/4 W	01121	CB1011
R58	1-945000-047	Resistor, fixed, composition, 6.8 kilohm, ±10%, 1/4 W	01121	CB6821
R59	1-945000-041	Resistor, fixed, composition, 2.2 kilohm, ±10%, 1/4 W	01121	CB2221
R60	1-945000-025	Resistor, fixed, composition, 100 ohm, ±10%, 1/4 W	01121	CB1011
R61	1-945000-025	Resistor, fixed, composition, 100 ohm, ±10%, 1/4 W	01121	CB1011
R62	1-945000-025	Resistor, fixed, composition, 100 ohms, ±10%, 1/4 W	01121	CB1011
R63	1-945000-030	Resistor, fixed, composition, 270 ohm, ±10%, 1/4 W	01121	CB2711
U1	1-926007-026	Integrated circuit, balanced mixer	01295	SN76514N
U2	1-926007-026	Integrated circuit, balanced mixer	01295	SN76514N
Y1	1-403992-004	Crystal, quartz, 12.6 MHz	88869	
Y2	1-403992-002	Crystal, quartz, 12.2 MHz	88869	
Y3	1-403992-001	Crystal, quartz, 12.0 MHz	88869	

Table 8-12. Parts List for 1 MHz Decade and Diode Switch Assembly, A3A3

Ref. Desig.	Singer Part No.	Description	Mfr. Code No.	Mfr. Part No.
C1	1-900001-013	Capacitor, fixed, plastic, 0.1 μF, ±20%, 250 V dc	73445	C280AE, 0.1 μF
C2	1-900077-002	Capacitor, fixed, ceramic 0.01 μF, ±20%, 100 V dc	56289	TG-S10
C3	1-900077-002	Capacitor, fixed, ceramic, 0.01 μF, ±20%, 100 V dc	56289	TG-S10
C4	1-900001-013	Capacitor, fixed, plastic, 0.1 μF, ±20%, 250 V dc	73445	C280AE, 0.1 μF
C5	1-900077-002	Capacitor, fixed, ceramic, 0.01 μF, ±20%, 100 V dc	56289	TG-S10
C6	1-900001-013	Capacitor, fixed, plastic, 0.1 μF, ±20%, 250 V dc	73445	C280AE, 0.1 μF
C7	1-900001-013	Capacitor, fixed, plastic, 0.1 μF, ±20%, 250 V dc	73445	C280AE, 0.1 μF
C8	1-900077-002	Capacitor, fixed, ceramic, 0.01 μF, ±20%, 100 V dc	56289	TG-S10
C9	1-900001-013	Capacitor, fixed, plastic, 0.1 μF, ±20%, 250 V dc	73445	C280AE, 0.1 μF
C10	1-900001-013	Capacitor, fixed, plastic, 0.1 μF, ±20%, 250 V dc	73445	C280AE, 0.1 μF
C11	1-900077-002	Capacitor, fixed, ceramic, 0.01 μF, ±20%, 100 V dc	56289	TG-S10
C12	1-900001-013	Capacitor, fixed, plastic, 0.1 μF, ±20%, 250 V dc	73445	C280AE, 0.1 μF
C13	1-900077-002	Capacitor, fixed, ceramic, 0.01 μF, ±20%, 100 V dc	56289	TG-S10
C14	1-900001-013	Capacitor, fixed, plastic, 0.1 μF, ±20%, 250 V dc	73445	C280AE, 0.1 μF
C15		Not used		
C16	1-900077-002	Capacitor, fixed, ceramic, 0.01 μF, ±20%, 100 V dc	56289	TG-S10
C17	1-900001-013	Capacitor, fixed, plastic, 0.1 μF, ±20%, 250 V dc	73445	C280AE, 0.1 μF
C18		Not used		
C19	1-900077-002	Capacitor, fixed, ceramic, 0.01 μF, ±20%, 100 V dc	56289	TG-S10
C20	1-900001-013	Capacitor, fixed, plastic, 0.1 μF, ±20%, 250 V dc	73445	C280AE, 0.1 μF
C21	1-900077-002	Capacitor, fixed, ceramic, 0.01 μF, ±20%, 100 V dc	56289	TG-S10
C22	1-900001-013	Capacitor, fixed, plastic, 0.1 μF, ±20%, 250 V dc	73445	C280AE, 0.1 μF
C23	1-900077-002	Capacitor, fixed, ceramic, 0.01 μF, ±20%, 100 V dc	56289	TG-S10
C24	1-900077-002	Capacitor, fixed, ceramic, 0.01 μF, ±20%, 100 V dc	56289	TG-S10
C25	1-900001-013	Capacitor, fixed, plastic, 0.1 μF, ±20%, 250 V dc	73445	C280AE, 0.1 μF

Table 8-12. Parts List for 1 MHz Decade and Diode Switch Assembly, A3A3 (Cont.)

Ref. Desig.	Singer Part No.	Description	Mfr. Code No.	Mfr. Part No.
C26	1-900001-013	Capacitor, fixed, plastic, 0.1 μF, ±20%, 250 V dc	73445	C280AE, 0.1 μF
C27	1-900077-002	Capacitor, fixed, ceramic, 0.01 μF, ±20%, 100 V dc	56289	TG-S10
C28	1-900001-013	Capacitor, fixed, plastic, 0.1 μF, ±20%, 250 V dc	73445	C280AE, 0.1 μF
C29	1-900001-013	Capacitor, fixed, plastic, 0.1 μF, ±20%, 250 V dc	73445	C280AE, 0.1 μF
C30	1-900077-002	Capacitor, fixed, ceramic, 0.01 μF, ±20%, 100 V dc	56289	TG-S10
C31	1-900001-013	Capacitor, fixed, plastic, 0.1 μF, ±20%, 250 V dc	73445	C280AE, 0.1 μF
C32	1-900001-013	Capacitor, fixed, plastic, 0.1 μF, ±20%, 250 V dc	73445	C280AE, 0.1 μF
C33	1-900077-002	Capacitor, fixed, plastic, 0.01 μF, ±20%, 100 V dc	56289	TG-S10
C34	1-900001-013	Capacitor, fixed, plastic, 0.1 μF, ±20%, 250 V dc	73445	C280AE, 0.1 μF
C35	1-900001-013	Capacitor, fixed, plastic, 0.1 μF, ±20%, 250 V dc	73445	C280AE, 0.1 μF
C36	1-900001-013	Capacitor, fixed, plastic, 0.1 μF, ±20%, 250 V dc	73445	C280AE, 0.1 μF
C37	1-900077-002	Capacitor, fixed, ceramic, 0.01 μF, ±20%, 100 V dc	56289	TG-S10
C38	1-900077-002	Capacitor, fixed, ceramic 0.01 μF, ±20%, 100 V dc	56289	TG-S10
C39	1-900001-013	Capacitor, fixed, plastic, 0.1 μF, ±20%, 250 V dc	73445	C280AE, 0.1 μF
C40	1-900077-002	Capacitor, fixed, ceramic, 0.01 μF, ±20%, 100 V dc	56289	TG-S10
C41	1-900077-002	Capacitor, fixed, ceramic, 0.01 μF, ±20%, 100 V dc	56289	TG-S10
C42	1-900098-033	Capacitor, fixed, mica, 120 pF, ±5%, 300 V dc	04062	DM5FC121J
C43	1-900077-002	Capacitor, fixed, ceramic, 0.01 μF, ±20%, 100 V dc	56289	TG-S10
C44	1-900077-002	Capacitor, fixed, ceramic, 0.01 μF, ±20%, 100 V dc	56289	TG-S10
C45	1-900077-002	Capacitor, fixed, ceramic, 0.01 μF ±20%, 100 V dc	56289	TG-S10
C46	1-900098-018	Capacitor, fixed, mica, 33 pF, ±5%, 300 V dc	04062	DM5CC330J
C47	1-900113-001	Capacitor, variable, ceramic, 2.5 pF to 20 pF, 500 V dc	91293	9302
C48	1-900098-025	Capacitor, fixed, mica, 56 pF, ±5%, 300 V dc	04062	DM5EC560J
C49	1-900113-001	Capacitor, variable, ceramic, 2.5 pF to 20 pF, 500 V dc	91293	9302

Table 8-12. Parts List for 1 MHz Decade and Diode Switch Assembly, A3A3 (Cont.)

Ref. Desig.	Singer Part No.	Description	Mfr. Code No.	Mfr. Part No.
C50	1-900113-001	Capacitor, variable, ceramic, 2.5 pF to 20 pF, 500 V dc	91293	9302
C51	1-900098-025	Capacitor, fixed, mica, 56 pF, ±5%, 300 V dc	04062	DM5EC560J
C52	1-900066-138	Capacitor, fixed, ceramic, 4.7 pF, ±5%, 500 V dc	95121	MC4.7 ±5%
C53	1-900098-025	Capacitor, fixed, mica, 56 pF, ±5%, 300 V dc	04062	DM5EC560J
C54	1-900113-001	Capacitor, variable, ceramic, 2.5 pF to 20 pF, 500 V dc	91293	9302
C55	1-900113-001	Capacitor, variable, ceramic, 2.5 pF to 20 pF, 500 V dc	91293	9302
C56	1-900098-025	Capacitor, fixed, mica, 56 pF, ±5%, 300 V dc	04062	DM5EC560J
C57	1-900066-136	Capacitor, fixed, ceramic, 3.9 pF, ±5%, 500 V dc	95121	MC3.9 ±5%
C58	1-900098-017	Capacitor, fixed, mica, 30 pF, ±5%, 300 V dc	04062	DM5EC300J
C59	1-900113-001	Capacitor, variable, ceramic, 2.5 pF to 20 pF, 500 V dc	91293	9302
C60	1-900098-035	Capacitor, fixed, mica, 150 pF, ±5%, 100 V dc	04062	DM5FA151J
C61	1-900077-002	Capacitor, fixed, ceramic, 0.01 μF, ±20%, 100 V dc	56289	TG-S10
C62	1-900077-002	Capacitor, fixed, ceramic, 0.01 μF, ±20%, 100 V dc	56289	TG-S10
C63	1-900077-002	Capacitor, fixed, ceramic, 0.01 μF, ±20%, 100 V dc	56289	TG-S10
C64	1-900077-002	Capacitor, fixed, ceramic, 0.01 μF, ±20%, 100 V dc	56289	TG-S10
C65	1-900098-018	Capacitor, fixed, mica, 33 pF, ±5%, 300 V dc	04062	DM5CC330J
C66	1-900113-001	Capacitor, variable, ceramic, 2.5 pF to 20 pF, 500 V dc	91293	9302
C67	1-900001-013	Capacitor, fixed, plastic, 0.1 μF, ±20%, 250 V dc	73445	C280AE, 0.1 μF
C68	1-900077-002	Capacitor, fixed, ceramic, 0.01 μF, ±20%, 100 V dc	56289	TG-S10
C69	1-900077-002	Capacitor, fixed, ceramic, 0.01 μF, ±20%, 100 V dc	56289	TG-S10
C70	1-900077-002	Capacitor, fixed, ceramic, 0.01 μF, ±20%, 100 V dc	56289	TG-S10
C71	1-900077-002	Capacitor, fixed, ceramic, 0.01 μF, ±20%, 100 V dc	56289	TG-S10
C72	1-900077-002	Capacitor, fixed, ceramic, 0.01 μF, ±20%, 100 V dc	56289	TG-S10
C73	1-900098-032	Capacitor, fixed, mica, 110 pF, ±5%, 300 V dc	04062	DM5FC111J

Table 8-12. Parts List for 1 MHz Decade and Diode Switch Assembly, A3A3 (Cont.)

Ref. Desig.	Singer Part No.	Description	Mfr. Code No.	Mfr. Part No.
C74	1-900098-032	Capacitor, fixed, mica, 110 pF, +5%, 300 V dc	04062	DM5FC111J
C75	1-900066-137	Capacitor, fixed, ceramic, 4.3 pF, 5%, 500 V dc	95121	MC4.3 +5%
C76	1-900098-032	Capacitor, fixed, mica, 110 pF, +5%, 300 V dc	04062	DM5FC111J
C77	1-900098-032	Capacitor, fixed, mica, 110 pF, ±5%, 300 V dc	04062	DM5FC111J
C78	1-900001-013	Capacitor, fixed, plastic, 0.1 μF, ±20%, 250 V dc	73445	C280AE, 0.1 μF
C79	1-900077-002	Capacitor, fixed, ceramic, 0.01 μF, +20%, 100 V dc	56289	TG-S10
C80	1-900077-002	Capacitor, fixed, ceramic, 0.01 μF, ±20%, 100 V dc	56289	TG-S10
C81	1-900098-025	Capacitor, fixed, mica, 56 pF, ±5%, 300 V dc	04062	DM5EC560J
C82	1-900077-002	Capacitor, fixed, ceramic, 0.01 μF, ±20%, 100 V dc	56289	TG-S10
C83	1-900077-002	Capacitor, fixed, ceramic, 0.01 μF, ± 20%, 100 V dc	56289	TG-S10
C84	1-900077-002	Capacitor, fixed, ceramic, 0.01 μF, ±20%, 100 V dc	56289	TG-S10
C85	1-900066-126	Capacitor, fixed, ceramic 1.5 pF, ±5%, 500 V dc	95121	MC1.5 ±5%
C86	1-900113-001	Capacitor, variable, ceramic, 2.5 pF to 20 pF, 500 V dc	91293	9302
C87	1-900113-001	Capacitor, variable, ceramic, 2.5 pF to 20 pF, 500 V dc	91293	9302
C88	1-900113-001	Capacitor, variable, ceramic, 2.5 pF to 20 pF, 500 V dc	91293	9302
C89	1-900066-127	Capacitor, fixed, ceramic, 1.8 pF, ± 5%, 500 V dc	95121	MC1.8 ±5%
C90	1-900113-001	Capacitor, variable, ceramic, 2.5 pF to 20 pF, 500 V dc	91293	9302
C91	1-900113-001	Capacitor, variable, ceramic, 2.5 pF to 20 pF, 500 V dc	91293	9302
C92	1-900066-126	Capacitor, fixed, ceramic, 1.5 pF, + 5%, 500 V dc	95121	MC1.5 ±5%
C93	1-900113-001	Capacitor, variable, ceramic, 2.5 pF to 20 pF, 500 V dc	91293	9302
C94	1-900113-001	Capacitor, variable, ceramic, 2.5 pF to 20 pF, 500 V dc	91293	9302
C95	1-900077-002	Capacitor, fixed, ceramic, 0.01 μF, ±20%, 100 V dc	56289	TG-S10
C96	1-900077-002	Capacitor, fixed, ceramic, 0.01 μF, + 20%, 100 V dc	56289	TG-S10
C97	1-900077-002	Capacitor, fixed, ceramic, 0.01 μF, ±20%, 100 V dc	56289	TG-S10

Table 8-12. Parts List for 1 MHz Decade and Diode Switch Assembly, A3A3 (Cont.)

Ref. Desig.	Singer Part No.	Description	Mfr. Code No.	Mfr. Part No.
C98	1-900077-002	Capacitor, fixed, ceramic, 0.01 μF, ±20%, 100 V dc	56289	TG-S10
C99	1-900113-001	Capacitor, variable, ceramic, 2.5 pF to 20 pF, 500 V dc	91293	9302
C100	1-900066-136	Capacitor, fixed, ceramic, 3.9 pF, ±5%, 500 V dc	95121	MC3.9 ±5%
C101	1-900001-013	Capacitor, fixed, plastic, 0.1 μF, ± 20%, 250 V dc	73445	C280AE, 0.1 μF
C102	1-900001-013	Capacitor, fixed, plastic, 0.1 μF, ±20%, 250 V dc	73445	C280AE, 0.1 μF
C103	1-900077-002	Capacitor, fixed, ceramic, 0.01 μF, ±20%, 100 V dc	56289	TG-S10
C104	1-900001-013	Capacitor, fixed, plastic, 0.1 μF, ±20%, 250 V dc	73445	C280AE, 0.1 μF
C105	1-900001-013	Capacitor, fixed, plastic, 0.1 μF, -20%, 250 V dc	73445	C280AE, 0.1 μF
C106	1-900077-002	Capacitor, fixed, ceramic, 0.01 μF, -20%, 100 V dc	56289	TG-S10
C107	1-900077-002	Capacitor, fixed, ceramic, 0.01 μF, ± 20%, 100 V dc	56289	TG-S10
C108	1-900001-013	Capacitor, fixed, plastic, 0.1 μF, ±20%, 250 V dc	73445	C280AE, 0.1 μF
C109	1-900098-042	Capacitor, fixed, mica, 300 pF, ±5%, 50 V dc	04062	DM5FY301J
C110	1-900098-035	Capacitor, fixed, mica, 150 pF, ±5%, 100 V dc	04062	DM5FA151J
C111	1-900098-041	Capacitor, fixed, mica, 270 pF, ± 5%, 50 V dc	04062	DM5FY271J
C112	1-900098-041	Capacitor, fixed, mica, 270 pF, ± 5%, 50 V dc	04062	DM5FY271J
C113	1-900098-035	Capacitor, fixed, mica, 150 pF, ±5%, 100 V dc	04062	DM5FA151J
C114	1-900098-030	Capacitor, fixed, mica, 91 pF, ±5%, 300 V dc	04062	DM5FC910J
C115	1-900113-001	Capacitor, variable, ceramic, 2.5 pF to 20 pF, 500 V dc	91293	9302
C116	1-900098-014	Capacitor, fixed, mica, 22 pF, +5%, 300 V dc	04062	DM5CC220J
C117	1-900066-136	Capacitor, fixed, ceramic, 3.9 pF, ±5%, 500 V dc	95121	MC3.9 -5%
C118	1-900098-020	Capacitor, fixed, mica, 39 pF, ±5%, 300 V dc	04062	DM5EC390J
C119	1-900113-001	Capacitor, variable, ceramic, 2.5 pF to 20 pF, 500 V dc	91293	9302
C120	1-900113-001	Capacitor, variable, ceramic, 2.5 pF to 20 pF, 500 V dc	91293	9302
C121	1-900098-020	Capacitor, fixed, mica, 39 pF, ±5%, 300 V dc	04062	DM5EC390J

Table 8-12. Parts List for 1 MHz Decade and Diode Switch Assembly, A3A3 (Cont.)

Ref. Desig.	Singer Part No.	Description	Mfr. Code No.	Mfr. Part No.
C122	1-900066-138	Capacitor, fixed, ceramic, 4.7 pF, 5%, 500 V dc	95121	MC4.7±5%
C123	1-900098-020	Capacitor, fixed, mica, 39 pF, ±5%, 300 V dc	04062	DM5EC390J
C124	1-900113-001	Capacitor, variable, ceramic, 2.5 pF to 20 pF, 500 V dc	91293	9302
C125	1-900113-001	Capacitor, variable, ceramic, 2.5 pF to 20 pF, 500 V dc	91293	9302
C126	1-900098-020	Capacitor, fixed, mica, 39 pF, ±5%, 300 V dc	04062	DM5EC390J
C127	1-900066-136	Capacitor, fixed, ceramic, 3.9 pF, ±5%, 500 V dc	95121	MC3.9±5%
C128	1-900098-014	Capacitor, fixed, mica, 22 pF, ±5%, 300 V dc	04062	DM5CC220J
C129	1-900113-001	Capacitor, variable, ceramic, 2.5 pF to 20 pF, 500 V dc	91293	9302
C130	1-900098-031	Capacitor, fixed, mica, 100 pF, ±5%, 300 V dc	04062	DM5FC101J
C131	1-900077-002	Capacitor, fixed, ceramic, 0.01 μF, ±20%, 100 V dc	56289	TG-S10
C132	1-900077-002	Capacitor, fixed, ceramic, 0.01 μF, ±20%, 100 V dc	56289	TG-S10
C133	1-900098-041	Capacitor, fixed, ceramic, 270 pF, ±5%, 100 V dc	04062	DM5FY271J
C134	1-900113-001	Capacitor, variable, ceramic, 2.5 pF to 20 pF, 500 V dc	91293	9302
C135	1-900098-009	Capacitor, fixed, mica, 10 pF, ±5%, 300 V dc	04062	DM5CC100J
C136	1-900077-002	Capacitor, fixed, ceramic, 0.01 μF, ±20%, 100 V dc	56289	TG-S10
C137	1-900077-002	Capacitor, fixed, ceramic, 0.01 μF, +20%, 100 V dc	56289	TG-S10
C138	1-900077-002	Capacitor, fixed, ceramic, 0.01 μF, ±20%, 100 V dc	56289	TG-S10
C139	1-900077-002	Capacitor, fixed, ceramic, 0.01 μF, ±20%, 100 V dc	56289	TG-S10
C140	1-900077-002	Capacitor, fixed, ceramic, 0.01 μF, +20%, 100 V dc	56289	TG-S10
C141	1-900098-014	Capactior, fixed, mica, 22 pF, +5%, 300 V dc	04062	DM5CC220J
C142	1-900077-002	Capacitor, fixed, ceramic, 0.01 μF, ±20%, 100 V dc	56289	TG-S10
C143	1-900098-019	Capacitor, fixed, mica, 36 pF, ±5%, 300 V dc	04062	DM5EC360J
C144	1-900098-019	Capacitor, fixed, mica, 36 pF, ±5%, 300 V dc	04062	DM5EC360J
CR1	1-913005-001	Diode, germanium, Vr = 30 V, If = 100 mA	03877	1N273
CR2	1-913005-001	Diode, germanium, Vr = 30 V, If = 100 mA	03877	1N273

Table 8-12. Parts List for 1 MHz Decade and Diode Switch Assembly, A3A3 (Cont.)

Ref. Desig.	Singer Part No.	Description	Mfr. Code No.	Mfr. Part No.
CR3	1-913005-001	Diode, germanium, Vr = 30 V, If = 100 mA	03877	1N273
CR4	1-913005-001	Diode, germanium, Vr = 30 V, If = 100 mA	03877	1N273
CR5	1-913005-001	Diode, germanium, Vr = 30 V, If = 100 mA	03877	1N273
CR6	1-913005-001	Diode, germanium, Vr = 30 V, If = 100 mA	03877	1N273
CR7	1-913005-001	Diode, germanium, Vr = 30 V, If = 100 mA	03877	1N273
CR8	1-913005-001	Diode, germanium, Vr = 30 V, If = 100 mA	03877	1N273
CR9	1-913005-001	Diode, germanium, Vr = 30 V, If = 100 mA	03877	1N273
CR10	1-913005-001	Diode, germanium, Vr = 30 V, If = 100 mA	03877	1N273
CR11	1-913005-001	Diode, germanium, Vr = 30 V, If = 100 mA	03877	1N273
CR12	1-913005-001	Diode, germanium, Vr = 30 V, If = 100 mA	03877	1N273
CR13	1-913005-001	Diode, germanium, Vr = 30 V, If = 100 mA	03877	1N273
CR14	1-913005-001	Diode, germanium, Vr = 30 V, If = 100 mA	03877	1N273
CR15	1-913005-001	Diode, germanium, Vr = 30 V, If = 100 mA	03877	1N273
CR16	1-913005-001	Diode, germanium, Vr = 30 V, If = 100 mA	03877	1N273
CR17	1-913005-001	Diode, germanium, Vr = 30 V, If = 100 mA	03877	1N273
CR18	1-913005-001	Diode, germanium, Vr = 30 V, If = 100 mA	03877	1N273
CR19	1-913005-001	Diode, germanium, Vr = 30 V, If = 100 mA	03877	1N273
CR20	1-913005-001	Diode, germanium, Vr = 30 V, If = 100 mA	03877	1N273
CR21	1-913005-001	Diode, germanium, Vr = 30 V, If = 100 mA	03877	1N273
CR22	1-913005-001	Diode, germanium, Vr = 30 V, If = 100 mA	03877	1N273
CR23	1-913005-001	Diode, germanium, Vr = 30 V, If = 100 mA	02877	1N273
CR24	1-913005-001	Diode, germanium, Vr = 30 V, If = mA	03877	1N273
CR25	1-913005-001	Diode, germanium, Vr = 30 V, If = 100 mA	03877	1N273
CR26	1-913005-001	Diode, germanium, Vr = 30 V, If = 100 mA	03877	1N273
CR27	1-913005-001	Diode, germanium, Vr = 30 V, If = 100 mA	03877	1N273

Table 8-12. Parts List for 1 MHz Decade and Diode Switch Assembly, A3A3 (Cont.)

Ref. Desig.	Singer Part No.	Description	Mfr. Code No.	Mfr. Part No.
J1	1-950031-003	Connector, jack, 1 pin	00779	2-332070-5
J2	1-950031-003	Connector, jack, 1 pin	00779	2-332070-5
J3	1-950031-003	Connector, jack, 1 pin	00779	2-332070-5
J4	1-950031-003	Connector, jack, 3 pins	00779	2-332070-5
J5	1-950031-003	Connector, jack, 3 pins	00779	2-332070-5
J6	1-950031-003	Connector, jack, 3 pins	00779	2-332070-5
J7	1-950031-003	Connector, jack, 3 pins	00779	2-332070-5
J8	1-950031-003	Connector, jack, 1 pin	00779	2-332070-5
J9	1-950031-003	Connector, jack, 1 pin	00779	2-332070-5
J10	1-950031-003	Connector, jack, 1 pin	00779	2-332070-5
J11	1-950031-003	Connector, jack, 1 pin	00779	2-332070-5
J12	1-950031-003	Connector, jack, 1 pin	00779	2-332070-5
J13	1-950031-003	Connector, jack, 3 pins	00779	2-332070-5
J14	1-950031-003	Connector, jack, 3 pins	00779	2-332070-5
J15	1-950031-003	Connector, jack, 3 pins	00779	2-332070-5
J16	1-950031-003	Connector, jack, 1 pin	00779	2-332070-5
L1	1-906043-029	Inductor, fixed, 22 μH, ±10%, 240 mA	81564	4029
L2	1-906043-029	Inductor, fixed, 22 μH, ±10%, 240 mA	81564	4029
L3	1-906043-029	Inductor, fixed, 22 μH, ±10%, 240 mA	81564	4029
L4	1-906043-031	Inductor, fixed, 33 μH, ±10%, 215 mA	81564	4031
L5	1-906043-031	Inductor, fixed, 33 μH, ±10%, 215 mA	81564	4031
L6	1-906043-031	Inductor, fixed, 33 μH, ±10%, 215 mA	81564	4031
L7	1-906043-031	Inductor, fixed, 33 H, ±10%, 215 mA	81564	4031
L8	1-906043-029	Inductor, fixed, 22 μH, +10%, 240 mA	81564	4029
L9	1-906043-029	Inductor, fixed, 22 μH, ±10%, 240 mA	81564	4029
L10	1-906043-029	Inductor, fixed, 22 μH, ±10%, 240 mA	81564	4029
L11	1-906043-029	Inductor, fixed, 22 μH, ±10%, 240 mA	81564	4029
L12	2-403855-002	Inductor, variable, 1.28 μH to 1.73 μH	88869	
L13	1-906043-019	Inductor, fixed, 3.3 μH, +10%, 560 mA	81564	4019
L14	1-403801-010	Inductor, fixed, 10 turns	88869	
L15	1-403801-010	Inductor, fixed, 10 turns	88869	

Table 8-12. Parts List for 1 MHz Decade and Diode Switch Assembly, A3A3 (Cont.)

Ref. Desig.	Singer Part No.	Description	Mfr. Code No.	Mfr. Part No.
L16	1-403801-010	Inductor, fixed, 10 turns	88869	
L17	1-403801-010	Inductor, fixed, 10 turns	88869	
L18	1-906043-019	Inductor, fixed, 3.3 μH, ±10%, 560 mA	81564	4019
L19	1-403801-010	Inductor, fixed, 10 turns	88869	
L20	2-403855-001	Inductor, variable, 0.64 μH to 0.86 μH	88869	
L21	2-403855-001	Inductor, variable, 0.64 μH to 0.86 μH	88869	
L22	2-403855-001	Inductor, variable, 0.64 μH to 0.86 μH	88869	
L23	1-906043-015	Inductor, fixed, 1.5 μH, ±10%, 775 mA	81564	4015
L24	1-403801-008	Inductor, fixed, 8 turns	88869	
L25	1-403801-010	Inductor, fixed, 10 turns	88869	
L26	1-403801-010	Inductor, fixed, 10 turns	88869	
L27	1-403801-010	Inductor, fixed, 10 turns	88869	
L28	1-906043-015	Inductor, fixed, 1.5 μH, ±10%, 775 mA	81564	4015
L29	1-403801-008	Inductor, fixed, 8 turns	88869	
L30	1-906043-031	Inductor, fixed, 33 μH, ±10%, 215 mA	81564	4031
L31	1-906043-031	Inductor, fixed, 33 μH, ±10%, 215 mA	81564	4031
L32	1-906043-009	Inductor, fixed, 0.47 μH, ±10%, 1000 mA	81564	4009
L33	1-906043-010	Inductor, fixed, 0.56 μH, ±10%, 980 mA	81564	4010
L34	1-906043-009	Inductor, fixed, 0.47μH, ±10%, 1000 mA	81564	4009
L35	1-403801-010	Inductor, fixed, 10 turns	88869	
L36	1-403801-010	Inductor, fixed, 10 turns	88869	
L37	1-403801-010	Inductor, fixed, 10 turns	88869	
L38	1-403801-010	Inductor, fixed, 10 turns	88869	
L39	1-906043-019	Inductor, fixed, 3.3 μH, ±10%, 560 mA	81564	4019

Table 8-12. Parts List for 1 MHz Decade and Diode Switch Assembly, A3A3 (Cont.)

Ref. Desig.	Singer Part No.	Description	Mfr. Code No.	Mfr. Part No.
L40	1-403801-008	Inductor, fixed, 8 turns	88869	
L41	1-906043-022	Inductor, fixed, 5.6 μH, ±10%, 380 mA	81564	4022
L42	1-906043-001	Inductor, fixed, 0.1 μH, ±10%, 1650 mA	81564	4001
Q1	1-958000-001	Transistor, silicon, NPN	04713	2N3904-5
Q2	1-958000-001	Transistor, silicon, NPN	04713	2N3904-5
Q3	1-958000-001	Transistor, silicon, NPN	04713	2N3904-5
Q4	1-958000-001	Transistor, silicon, NPN	04713	2N3904-5
Q5	1-958000-001	Transistor, silicon, NPN	04713	2N3904-5
Q6	1-958000-002	Transistor, silicon, PNP	04713	2N3906-5
Q7	1-958018-008	Transistor, silicon, NPN	04713	2N5179
Q8	1-958018-001	Transistor, silicon, NPN	04713	2N5179
Q9	1-958000-001	Transistor, silicon, NPN	04713	2N3904-5
Q10	1-958000-001	Transistor, silicon, NPN	04713	2N3904-5
Q11	1-958000-002	Transistor, silicon, PNP	04713	2N3906-5
Q12	1-958101-001	Transistor, silicon, NPN	04713	2N6304
Q13	1-958018-008	Transistor, silicon, NPN	04713	2N5179
Q14	1-958000-002	Transistor, silicon, PNP	04713	2N3906-5
Q15	1-958000-002	Transistor, silicon, PNP	04713	2N3906-5
Q16	1-958000-001	Transistor, silicon, NPN	04713	2N3904-5
Q17	1-958018-001	Transistor, silicon, NPN	04713	2N5179
R1	1-945000-164	Resistor, fixed, composition, 1.2 kilohm, ±5%, 1/4 W	01121	CB1225
R2	1-945000-159	Resistor, fixed, composition, 750 ohm, ±5%, 1/4 W	01121	CB7515
R3	1-945000-148	Resistor, fixed, composition, 270 ohm, ±5%, 1/4 W	01121	CB2715
R4	1-945000-184	Resistor, fixed, composition, 8.2 kilohm, ±5%, 1/4 W	01121	CB8225
R5	1-945000-164	Resistor, fixed, composition, 1.2 kilohm, ±5%, 1/4 W	01121	CB1225
R6	1-945000-184	Resistor, fixed, composition, 8.2 kilohm, ±5%, 1/4 W	01121	CB8225
R7	1-945000-164	Resistor, fixed, composition, 1.2 kilohm, ±5%, 1/4 W	01121	CB1225
R8	1-945000-184	Resistor, fixed, composition, 8.2 kilohm, ±5%, 1/4 W	01121	CB8225
R9	1-945000-164	Resistor, fixed, composition, 1.2 kilohm, +5%, 1/4 W	01121	CB1225
R10	1-945000-170	Resistor, fixed, composition, 2.2 kilohm, ±5%, 1/4 W	01121	CB2225
R11	1-945000-138	Resistor, fixed, composition, 100 ohm, ±5%, 1/4 W	01121	CB1015
R12	1-945000-170	Resistor, fixed, composition, 2.2 kilohm, ±5%, 1/4 W	01121	CB2225

Table 8-12. Parts List for 1 MHz Decade and Diode Switch Assembly, A3A3 (Cont.)

Ref. Desig.	Singer Part No.	Description	Mfr. Code No.	Mfr. Part No.
R13	1-945000-158	Resistor, fixed, composition, 680 ohm, +5%, 1/4 W	01121	CB6815
R14	1-945000-170	Resistor, fixed, composition, 2.2 kilohm, 5%, 1/4 W	01121	CB2225
R15	1-945000-138	Resistor, fixed, composition, 100 ohm, ±5%, 1/4 W	01121	CB1015
R16	1-945000-170	Resistor, fixed, composition, 2.2 kilohm ±5%, 1/4 W	01121	CB2225
R17	1-945000-158	Resistor, fixed, composition, 680 ohm, ±5%, 1/4 W	01121	CB6815
R18	1-945000-170	Resistor, fixed, composition, 2.2 kilohm, ±5%, 1/4 W	01121	CB2225
R19	1-945000-138	Resistor, fixed, composition, 100 ohm, ±5%, 1/4 W	01121	CB1015
R20	1-945000-170	Resistor, fixed, composition, 2.2 kilohm, ±5%, 1/4 W	01121	CB2225
R21	1-945000-158	Resistor, fixed, composition, 680 ohm, ±5%, 1/4 W	01121	CB6815
R22	1-945000-170	Resistor, fixed, composition, 2.2 kilohm, ± 5%, 1/4 W	01121	CB2225
R23	1-945000-138	Resistor, fixed, composition, 100 ohm, ± 5%, 1/4 W	01121	CB1015
R24	1-945000-170	Resistor, fixed, composition, 2.2 kilohm, ±5%, 1/4 W	01121	CB2225
R25	1-945000-158	Resistor, fixed, composition, 680 ohm, ±5%, 1/4 W	01121	CB6815
R26	1-945000-184	Resistor, fixed, composition, 8.2 kilohm, ± 5%, 1/4 W	01121	CB8225
R27	1-945000-164	Resistor, fixed, composition, 1.2 kilohm, ±5%, 1/4 W	01121	CB1225
R28	1-945000-184	Resistor, fixed, composition, 8.2 kilohm, ± 5%, 1/4 W	01121	CB8225
R29	1-945000-164	Resistor, fixed, composition, 1.2 kilohm, ±5%, 1/4 W	01121	CB1225
R30	1-945000-184	Resistor, fixed, composition, 8.2 kilohm, ± 5%, 1/4 W	01121	CB8225
R31	1-945000-164	Resistor, fixed, composition, 1.2 kilohm, ±5%, 1/4 W	01121	CB1225
R32	1-945000-184	Resistor, fixed, composition, 8.2 kilohm, ± 5%, 1/4 W	01121	CB8225
R33	1-945000-164	Resistor, fixed, composition, 1.2 kilohm, ± 5%, 1/4 W	01121	CB1225
R34	1-945000-164	Resistor, fixed, composition, 1.2 kilohm, ± 5%, 1/4 W	01121	CB1225
R35	1-945000-156	Resistor, fixed, composition, 560 ohm, ± 5%, 1/4 W	01121	CB5616
R36	1-945000-148	Resistor, fixed, composition, 270 ohm, 5%, 1/4 W	01121	CB2715

Table 8-12. Parts List for 1 MHz Decade and Diode Switch Assembly, A3A3 (Cont.)

Ref. Desig.	Singer Part No.	Description	Mfr. Code No.	Mfr. Part No.
R37	1-945000-182	Resistor, fixed, composition, 6.8 kilohm, ±5%, 1/4 W	01121	CB6825
R38	1-945000-175	Resistor, fixed, composition, 3.6 kilohm, ±5%, 1/4 W	01121	CB3625
R39	1-945000-182	Resistor, fixed, composition, 6.8 kilohm, ±5%, 1/4 W	01121	CB6825
R40	1-945000-146	Resistor, fixed, composition, 220 ohm, ±5%, 1/4 W	01121	CB2215
R41	1-945000-124	Resistor, fixed, composition, 27 ohm, ±5%, 1/4 W	01121	CB2705
R42	1-945000-194	Resistor, fixed, composition, 22 kilohm, ±5%, 1/4 W	01121	CB2235
R43	1-945000-152	Resistor, fixed, composition, 390 ohm, ±5%, 1/4 W	01121	CB3915
R44	1-945000-138	Resistor, fixed, composition, 100 ohm, ±5%, 1/4 W	01121	CB1015
R45	1-945160-001	Resistor, variable, cermet, 100 ohm, ±20%, 1/4 W	32997	3352E101
R46	1-945000-138	Resistor, fixed, composition, 100 ohm, ±5%, 1/4 W	01121	CB1015
R47	1-945000-186	Resistor, fixed, composition, 10 kilohm, ±5%, 1/4 W	01121	CB1035
R48	1-945000-172	Resistor, fixed, composition, 2.7 kilohm, ±5%, 1/4 W	01121	CB2725
R49	1-945000-138	Resistor, fixed, composition, 100 ohm, ±5%, 1/4 W	01121	CB1015
R50	1-945000-170	Resistor, fixed, composition, 2.2 kilohm, ±5%, 1/4 W	01121	CB2225
R51	1-945000-138	Resistor, fixed, composition, 100 ohm, ±5%, 1/4 W	01121	CB1015
R52	1-945000-170	Resistor, fixed, composition, 2.2 kilohm, ±5%, 1/4 W	01121	CB2225
R53	1-945000-158	Resistor, fixed, composition, 680 ohm, ±5%, 1/4 W	01121	CB6815
R54	1-945000-182	Resistor, fixed, composition, 6.8 kilohm, ±5%, 1/4 W	01121	CB6825
R55	1-945000-175	Resistor, fixed, composition, 3.6 kilohm, ±5%, 1/4 W	01121	CB3625
R56	1-945000-182	Resistor, fixed, composition, 6.8 kilohm, ±5%, 1/4 W	01121	CB6825
R57	1-945000-146	Resistor, fixed, composition, 220 ohm, ±5%, 1/4 W	01121	CB2215
R58	1-945000-120	Resistor, fixed, composition, 18 ohm, ±5%, 1/4 W	01121	CB1805
R59	1-945000-194	Resistor, fixed, composition, 22 kilohm, ±5%, 1/4 W	01121	CB2235
R60	1-945000-152	Resistor, fixed, composition, 390 ohm, ±5%, 1/4 W	01121	CB3915

Table 8-12. Parts List for 1 MHz Decade and Diode Switch Assembly, A3A3 (Cont.)

Ref. Desig.	Singer Part No.	Description	Mfr. Code No.	Mfr. Part No.
R61	1-945000-138	Resistor, fixed, composition, 100 ohm, ±5%, 1/4 W	01121	CB1015
R62	1-945160-001	Resistor, variable, cermet, 100 ohm, ±20%, 1/4 W	32997	3352E101
R63	1-945000-186	Resistor, fixed, composition, 10 kilohm, ±5%, 1/4 W	01121	CB1035
R64	1-945000-138	Resistor, fixed, composition, 100 ohm, ±5%, 1/4 W	01121	CB1015
R65	1-945000-172	Resistor, fixed, composition, 2.7 kilohm, ±5%, 1/4 W	01121	CB2725
R66	1-945000-138	Resistor, fixed, composition, 100 ohm, ±5%, 1/4 W	01121	CB1015
R67	1-945000-186	Resistor, fixed, composition, 10 kilohm, ±5%, 1/4 W	01121	CB1035
R68	1-945000-184	Resistor, fixed, composition, 8.2 kilohm, ±5%, 1/4 W	01121	CB8225
R69	1-945000-180	Resistor, fixed, composition, 5.6 kilohm, ±5%, 1/4 W	01121	CB5625
R70	1-945000-170	Resistor, fixed, composition, 2.2 kilohm, ±5%, 1/4 W	01121	CB2225
R71	1-945000-160	Resistor, fixed, composition, 820 ohm, ±5%, 1/4 W	01121	CB8215
R72	1-945000-162	Resistor, fixed, composition, 1 kilohm, ±5%, 1/4 W	01121	CB1025
R73	1-945000-170	Resistor, fixed, composition, 2.2 kilohm, ±5%, 1/4 W	01121	CB2225
R74	1-945000-162	Resistor, fixed, composition, 1 kilohm, ±5%, 1/4 W	01121	CB1025
R75	1-945000-162	Resistor, fixed, composition, 1 kilohm, ±5%, 1/4 W	01121	CB1025
R76	1-945000-170	Resistor, fixed, composition, 2.2 kilohm, ±5%, 1/4 W	01121	CB2225
R77	1-945000-158	Resistor, fixed, composition, 680 ohm, ±5%, 1/4 W	01121	CB6815
R78	1-945000-170	Resistor, fixed, composition, 2.2 kilohm, ±5%, 1/4 W	01121	CB2225
R79	1-945000-138	Resistor, fixed, composition, 100 ohm, ±5%, 1/4 W	01121	CB1015
R80	1-945000-142	Resistor, fixed, composition, 150 ohm, ±5%, 1/4 W	01121	CB1515
R81	1-945000-128	Resistor, fixed, composition, 39 ohm, ±5%, 1/4 W	01121	CB3905
R82	1-945000-142	Resistor, fixed, composition, 150 ohm, ±5%, 1/4 W	01121	CB1515
R83	1-945000-149	Resistor, fixed, composition, 300 ohm, ±5%, 1/4 W	01121	CB3015
R84	1-945000-149	Resistor, fixed, composition, 300 ohm, ±5%, 1/4 W	01121	CB3015

Table 8-12. Parts List for 1 MHz Decade and Diode Switch Assembly, A3A3 (Cont.)

Ref. Desig.	Singer Part No.	Description	Mfr. Code No.	Mfr. Part No.
R85	1-945000-120	Resistor, fixed, composition, 18 ohm, ±5%, 1/4 W	01121	CB1805
R86	1-945000-149	Resistor, fixed, composition, 300 ohm, ±5%, 1/4 W	01121	CB3015
R87	1-945000-120	Resistor, fixed, composition, 18 ohm, ±5%, 1/4 W	01121	CB1805
R88	1-945000-149	Resistor, fixed, composition, 300 ohm, ±5%, 1/4 W	01121	CB3015
R89		Not used		
R90	1-945160-001	Resistor, variable, cermet 100 ohm, ±20%, 1/4W	32997	3352E101
R91	1-945000-184	Resistor, fixed, composition, 8.2 kilohm, ±5%, 1/4 W	01121	CB8225
R92	1-945000-170	Resistor, fixed, composition, 2.2 kilohm, ±5%, 1/4 W	01121	CB2225
R93	1-945000-138	Resistor, fixed, composition, 100 ohm, ±5%, 1/4 W	01121	CB1015
R94	1-945000-146	Resistor, fixed, composition, 220 ohm, ±5%, 1/4 W	01121	CB2215
R95		Not used		
R96		Not used		
R97		Not used		
R98	1-945000-120	Resistor, fixed, composition, 18 ohm, ±5%, 1/4 W	01121	CB1805
R99	1-945000-149	Resistor, fixed, composition, 300 ohm, ±5%, 1/4 W	01121	CB3015
R100	1-945000-149	Resistor, fixed, composition, 300 ohm, ±5%, 1/4 W	01121	CB3015
R101	1-945000-149	Resistor, fixed, composition, 300 ohm, ±5%, 1/4 W	01121	CB3015
R102	1-945000-120	Resistor, fixed, composition, 18 ohm, ±5%, 1/4 W	01121	CB1805
R103	1-945000-149	Resistor, fixed, composition, 300 ohm, ±5%, 1/4 W	01121	CB3015
R104	1-945000-148	Resistor, fixed, composition, 270 ohm, ±5%, 1/4 W	01121	CB2715
R105	1-945000-148	Resistor, fixed, composition, 270 ohm, ±5%, 1/4 W	01121	CB2715
R106	1-945000-148	Resistor, fixed, composition, 270 ohm, ±5%, 1/4 W	01121	CB2715
R107	1-945000-148	Resistor, fixed, composition, 270 ohm, ±5%, 1/4 W	01121	CB2715
R108	1-945000-148	Resistor, fixed, composition, 270 ohm, +5%, 1/4 W	01121	CB2715
R109	1-945000-130	Resistor, fixed, composition, 47 ohm, +5%, 1/4 W	01121	CB4705

Table 8-12. Parts List for 1 MHz Decade and Diode Switch Assembly, A3A3 (Cont.)

Ref. Desig.	Singer Part No.	Description	Mfr. Code No.	Mfr. Part No.
U1	1-926007-026	Integrated circuit, balanced mixer	01295	SN76514N
Y1	1-403992-001	Crystal, 12 MHz	88869	
Y2	1-403992-001	Crystal, 12 MHz	88869	
Y3	1-403992-002	Crystal, 12.2 MHz	88869	
Y4	1-403992-002	Crystal, 12.2 MHz	88869	
Y5	1-403992-003	Crystal, 12.4 MHz	88869	
Y6	1-403992-004	Crystal, 12.6 MHz	88869	
Y7	1-403992-004	Crystal, 12.6 MHz	88869	
Z1	1-403915-002	Mixer, doubly balanced	88869	
Z2	1-403915-003	Mixer, doubly balanced	88869	

Table 8-13. Parts List for Interconnect Assembly, A4

Ref. Desig.	Singer Part No.	Description	Mfr. Code No.	Mfr. Part No.
A4A1	4-005019-001	Assembly, Input Filter and Diode Switch	88869	
A4A2	4-005026-006	Assembly, 90 MHz Multiplier	88869	
A4A3	4-005029-007	Assembly, 810 MHz Multiplier	88869	
A4A4	4-005034-001	Assembly, 930 MHz Multiplier	88869	
A4A5	4-005031-001	Assembly, AM Modulator and Diode Switch	88869	
A4A6	4-005026-002	Assembly, 240 MHz Multiplier	88869	
A4A7	4-005026-004	Assembly, 80 MHz and 160 MHz Multiplier	88869	
A4A8	4-005026-001	Assembly, 90 MHz and 180 MHz Multiplier	88869	
A4A9	4-005026-003	Assembly, 100 MHz and 200 MHz Multiplier	88869	
A4A10	4-005026-005	Assembly, 220 MHz Multiplier	88869	
A4A11	4-005034-002	Assembly, Gain Control Amplifier	88869	
C1	1-900001-013	Capacitor, fixed, plastic, 0.1 μF, ±20%, 250 V dc	73445	C280AE, 0.1 μF
C2	1-900001-013	Capacitor, fixed, plastic, 0.1 μF, ±20%, 250 V dc	73445	C280AE, 0.1 μF
FL1	1-403841-001	Filter, bandpass, 700 MHz to 800 MHz	88869	
J1	1-403946-001	Connector, jack, 14 pins	88869	
J2	556-205-001	Connector, jack, SMB	98291	51-051-000
J3	556-205-001	Connector, jack, SMB	98291	51-051-000
J4		Connector, jack, solder point		
L1	1-906043-017	Inductor, fixed, 2.2 μH, ±10%, 690 mA	81564	4017
R1	1-945086-039	Resistor, fixed composition, 100 ohm, ±5%, 1/8 W	01121	BB1015
W1	2-202609-001	Cable assembly, semi-rigid coax, 5.7 in.	88869	
W2	2-202610-001	Cable assembly, semi-rigid coax, 10.6 in.	88869	
W3	2-202611-002	Cable assembly, semi-rigid coax, 7.5 in.	88869	
W4	2-202612-001	Cable assembly, semi-rigid coax, 6.7 in., SMB at one end	88869	
W5	2-202613-001	Cable assembly, semi-rigid coax, 2.1 in., SMB at one end	88869	
W6	2-202614-001	Cable assembly, semi-rigid coax, 3.6 in., SMB at one end	88869	
W7	2-202615-001	Cable assembly, semi-rigid coax, 3.4 in.	88869	
W8	2-202616-001	Cable assembly, semi-rigid coax, 5.3 in.	88869	
W9	2-202617-001	Cable assembly, semi-rigid coax, 3.3 in.	88869	
W10	2-202618-001	Cable assembly, semi-rigid coax, 6.6 in.	88869	
W11	2-202619-001	Cable assembly, semi-rigid coax, 4.3 in.	88869	
W12	2-202620-001	Cable assembly, semi-rigid coax, 2.3 in.	88869	
W13	2-202621-001	Cable assembly, semi-rigid coax, 2.9 in.	88869	
W14	2-202622-001	Cable assembly, semi-rigid coax, 19.3 in.	88869	
W15	2-202623-001	Cable assembly, semi-rigid coax, 6 in.	88869	
W16	2-202624-001	Cable assembly, semi-rigid coax, 4.2 in.	88869	
W17	2-202625-001	Cable assembly, semi-rigid coax, 3.4 in.	88869	

Table 8-13. Parts List for Interconnect Assembly, A4 (Cont.)

Ref. Desig.	Singer Part No.	Description	Mfr. Code No.	Mfr. Part No.
W18	2-202625-001	Cable assembly, semi-rigid coax, 3.4 in.	88869	
W19	2-202625-001	Cable assembly, semi-rigid coax, 3.4 in.	88869	
W20	2-202625-001	Cable assembly, semi-rigid coax, 3.4 in.	88869	
W21	2-202626-001	Cable assembly, semi-rigid coax, 6.6 in.	88869	
XA4A1J1		Connector, jack, consisting of:		
	1-900079-003	Capacitor, fixed, feed thru, 470 pF, +100% -0%, 300 V dc	01121	FW5N-471P
	1-900079-003	Capacitor, fixed, feed-thru, 470 pF, +100% -0%, 300 V dc	01121	FW5N-471P
	1-910301-001	Connector, contact, 1 pin	00779	86090-3
XA4A1J2		Connector, jack, consisting of:		
	1-900079-003	Capacitor, fixed, feed-thru, 470 pF, +100% -0%, 300 V dc	01121	FW5N-471P
	1-910301-001	Connector, contact, 1 pin	00779	86090-3
XA4A1J3	1-403946-001	Connector, contact, 5 pins	88869	
XA4A1J4		Connector, jack, consisting of:		
	1-900079-003	Capacitor, fixed, feed-thru 470 pF, +100% - 0%, 300 V dc	01121	FW5N-471P
	1-910301-001	Connector, contact, 1 pin	00779	86090-3
XA4A1J5	1-403946-001	Connector, jack, 5 pins	88869	
XA4A1J6	1-403946-001	Connector, jack, 5 pins	88869	
XA4A1J7	1-403946-001	Connector, jack, 5 pins	88869	
XA4A2J1	1-403946-001	Connector, jack, 5 pins	88869	
XA4A1J2	1-403946-001	Connector, jack, 5 pins	88869	
XA4A2J3		Not used		
XA4A2J4		Connector, jack, consisting of:		
	1-900079-003	Capacitor, fixed, feed-thru, 470 pF, +100% -0%, 300 V dc	01121	FW5N-471P
	1-910301-001	Connector, contact, 1 pin	00779	86090-3
XA4A3J1	1-403946-001	Connector, jack, 5 pins	88869	
XA4A3J2		Connector, jack, consisting of:		
	1-900079-003	Capacitor, fixed, feed-thru, 470 pF, +100% -0%, 300 V dc	01121	FW5N-471P
	1-910301-001	Connector, contact, 1 pin	00779	86090-3
XA4A3J3	1-403946-001	Connector, jack, 5 pin	88869	
XA4A4J1	1-403946-001	Connector, jack, 5 pin	88869	
XA4A4J2		Connector, jack, consisting of:		
	1-900079-003	Capacitor, fixed, feed-thru, 470 pF, +100% -0%, 300 V dc	01121	FW5N-471P
	1-910301-001	Connector, contact, 1 pin	00779	86090-3
XA4A4J3	1-403946-001	Connector, jack, 5 pin	88869	
XA4A5J1		Connector, jack, consisting of:		
	1-900079-003	Capacitor, fixed, feed-thru 470 pF, +100% -0%, 300 V dc	01121	FW5N-471P
	1-910301-001	Connector, contact, 1 pin	00779	86090-3
XA4A5J2	1-403946-001	Connector, jack, 5 pin	88869	

Table 8-13. Parts List for Interconnect Assembly, A4 (Cont.)

Ref. Desig.	Singer Part No.	Description	Mfr. Code No.	Mfr. Part No.
XA4A5J3		Connector, jack, consisting of:		
	1-900079-003	Capacitor, fixed, feed-thru, 470 pF, +100% -0%, 300 V dc	01121	FW5N-471P
	1-910301-001	Connector, contact, 1 pin	00779	86090-3
XA4A5J4		Connector, jack, consisting of:		
	1-900079-003	Capacitor, fixed, feed-thru 470 pF, +100% -0%, 300 V dc	01121	FW5N-471P
	1-910301-001	Connector, contact, 1 pin	0779	86090-3
XA4A5J5	1-403946-001	Connector, contact, 5 pin	88869	
XA4A5J6		Connector, jack, consisting of:		
	1-900079-003	Capacitor, fixed, feed-thru, 470 pF, +100% -0%, 300 V dc	01121	FW5N-471P
	1-910301-001	Connector, contact 1 pin	00779	86090-3
XA4A5J7		Connector, jack, consisting of:		
	1-900079-003	Capacitor, fixed, feed-thru 470 pF, +100% -0%, 300 V dc	01121	FW5N-471P
	1-910301-001	Connector, contact, 1 pin	00779	86090-3
XA4A5J8	1-403946-001	Connector, jack, 5 pin	88869	
XA4A5J9		Connector, jack, consisting of:		
	1-900079-003	Capacitor, fixed, feed-thru 470 pF, +100% -0%, 300 V dc	01121	FW5N-471P
	1-910301-001	Connector, contact, 1 pin	00779	86090-3
XA4A5J10		Connector, jack, consisting of:		
	1-900079-003	Capacitor, fixed, feed-thru, 470 ohm, +100% -0%, 300 V dc	01121	FW5N-471P
	1-910301-001	Connector, contact, 1 pin	00779	86090-3
XA4A5J11	1-403946-001	Connector, jack, 5 pin	88869	
XA4A5J12		Connector, jack, consisting of:		
	1-900079-003	Capacitor, fixed, feed-thru, 470 pF, +100% -0%, 300 V dc	01121	FW5N-471P
	1-910301-001	Connector, contact, 1 pin	00779	86090-3
XA4A5J13		Connector, jack, consisting of:		
	1-900079-003	Capacitor, fixed, feed-thru, 470 pF, +100% -0%, 300 V dc	01121	FW5N-471P
	1-910301-001	Connector, contact, 1 pin	00779	86090-3
XA4A5J14		Connector, jack, consisting of:		
	1-900079-003	Capacitor, fixed, feed-thru 470 pF, +100%,-0% 300 V dc	01121	FW5N-471P
	1-910301-001	Connector, contact, 1 pin	00779	86090-3
XA4A5J15		Connector, jack, consisting of:		
	1-900079-003	Capacitor, fixed, feed-thru 470 pF, +100% -0% 300 V dc	01121	FW5N-471P
	1-910301-001	Connector, contact, 1 pin	00779	86090-3

Table 8-13. Parts List for Interconnect Assembly, A4 (Cont.)

Ref. Desig.	Singer Part No.	Description	Mfr. Code No.	Mfr. Part No.
XA4A5J16		Connector, jack, consisting of:		
	1-900079-003	Capacitor, fixed, feed-thru, 470 pF, +100% -0%, 300 V dc	01121	FW5N-471P
	1-910301-001	Connector, contact, 1 pin	00779	86090-3
XA4A5J17	1-403946-001	Connector, jack, 5 pin	88869	
XA4A5J18	1-403946-001	Connector, jack, 5 pin	88869	
XA4A5J19	1-403946-001	Connector, jack, 5 pin	88869	
XA4A5J20		Connector, jack, consisting of:		
	1-900079-003	Capacitor, fixed, feed-thru, 470 pF, +100% -0%, 300 V dc	01121	FW5N-471P
	1-910301-001	Connector, contact, 1 pin	00779	86090-3
XA4A6J1	1-403946-001	Connector, jack, 5 pin	88869	
XA4A6J2		Not used		
XA4A6J3	1-403946-001	Connector, jack, 5 pin	88869	
XA4A6J4		Connector, jack, consisting of:		
	1-900079-003	Capacitor, fixed, feed-thru 470 pF, +100% -0%, 300 V dc	01121	FW5N-471P
	1-910301-001	Connector, contact, 1 pin	00779	86090-3
XA4A7J1	1-403946-001	Connector, jack, 5 pin	88869	
XA4A7J2	1-403946-001	Connector, jack, 5 pin	88869	
XA4A7J3	1-403946-001	Connector, jack, 5 pin	88869	
XA4A7J4		Connector, jack, consisting of:		
	1-900079-003	Capacitor, fixed, feed-thru, 470 pF, +100% -0%, 300 V dc	01121	FW5N-471P
	1-910301-001	Connector, contact, 1 pin	00779	86090-3
XA4A7J5		Connector, jack, consisting of:		
	1-900079-003	Capacitor, fixed, feed-thru, 470 pF, +100% -0%. 300 V dc	01121	FW5N-471P
	1-910301-001	Connector, contact, 1 pin	00779	86090-3
XA4A8J1	1-403946-001	Connector, jack, 5 pin	88869	
XA4A8J2	1-403946-001	Connector, jack, 5 pin	88869	
XA4A8J3	1-403946-001	Connector, jack, 5 pin	88869	
XA4A8J4		Connector, jack, consisting of:		
	1-900079-003	Capacitor, fixed, feed-thru, 470 pF, +100% -0%, 300 V dc	01121	FW5N-471P
	1-910301-001	Connector, contact, 1 pin	00779	86090-3
XA4A8J5		Connector, jack, consisting of:		
	1-900079-003	Capacitor, fixed, feed-thru, 470 pF, +100% -0%, 300 V dc	01121	FW5N-471P
	1-910301-001	Connector, contact, 1 pin	00779	86090-3
XA4A9J1	1-403946-001	Connector, jack, 5 pin	88869	
XA4A9J2		Not used		
XA4A9J3	1-403946-001	Connector, jack, 5 pin	88869	

Table 8-13. Parts List for Interconnect Assembly, A4 (Cont.)

Ref. Desig.	Singer Part No.	Description	Mfr. Code No.	Mfr. Part No.
XA4A9J4		Connector, jack, consisting of:		
	1-900079-003	Capacitor, fixed, feed-thru, 470 pF, +100% -0%, 300 V dc	01121	FW5N-471P
	1-910301-001	Connector, contact, 1 pin	00779	86090-3
XA4A10J1	1-403946-001	Connector, jack, 5 pin	88869	
XA4A10J2		Not used		
XA4A10J3	1-403946-001	Connector, jack, 5 pin	88869	
XA4A10J4		Connector, jack, consisting of:		
	1-900079-003	Capacitor, fixed, feed-thru, 470 pF, +100% -0%, 300 V dc	01121	FW5N-471P
	1-910301-001	Connector, contact, 1 pin	01121	86090-3
XA4A11J1	1-403946-001	Connector, jack, 5 pin	88869	
XA4A11J2		Connector, jack, consisting of:		
	1-900079-003	Capacitor, fixed, feed-thru, 470 pF, +100% -0%, 300 V dc	01121	FW5N-471P
	1-910301-001	Connector, contact, 1 pin	00779	86090-3
XA4A11J3		Not used		
XA4A11J4		Connector, jack, consisting of:		
	1-900079-003	Capacitor, fixed, feed-thru, 470 pF, +100% -0%, 300 V dc	01121	FW5N-471P
	1-910301-001	Connector, contact, 1 pin	00779	86090-1
XA4A11J5	1-403946-001	Connector, jack, 5 pin	88869	
XZ1-R		Part of W6		
XZ1-X		Part of W4		
XZ1-L		Part of W5		
XZ2-R		Part of W15		
XZ2-X		Part of W14		
XZ2-L		Part of W13		
Z1	1-403853-002	Mixer, doubly balanced	88869	
Z2	1-403853-003	Mixer, doubly balanced	88869	

Table 8-14. Parts List for Input Diode Switch, Mixer and Filter Assembly, A4A1

Ref. Desig.	Singer Part No.	Description	Mfr. Code No.	Mfr. Part No.
C1	1-900012-002	Capacitor, fixed, ceramic, 0.001 μF, +100% -0%, 500 V dc	72982	861Z5U102P
C2	1-900077-002	Capacitor, fixed, ceramic 0.01 μF, ±20%, 100 V dc	56289	TG-S10
C3	1-900077-002	Capacitor, fixed, ceramic, 0.01 μF, ±20%, 100 V dc	56289	TG-S10
C4	1-900077-002	Capacitor, fixed, ceramic, 0.01 μF, ±20%, 100 V dc	56289	TG-S10
C5	1-900077-002	Capacitor, fixed, ceramic 0.01 μF, ±20%, 100 V dc	56289	TG-S10
C6	1-900077-002	Capacitor, fixed, ceramic, 0.01 μF, +20%, 100 V dc	56289	TG-S10
C7	1-900012-002	Capacitor, fixed, ceramic, 0.001 μF, +100% -0%, 500 V dc	72982	861Z5U102P
C8	1-900077-002	Capacitor, fixed, ceramic 0.01 μF, -20%, 100 V dc	56289	TG-S10
C9	1-900077-002	Capacitor, fixed, ceramic, 0.01 μF, ±20%, 100 V dc	56289	TG-S10
C10	1-900077-002	Capacitor, fixed, ceramic, 0.01 μF, +20%, 100 V dc	56289	TG-S10
C11	1-900077-002	Capacitor, fixed, ceramic, 0.01 μF, ±20%, 100 V dc	56289	TG-S10
C12	1-900098-025	Capacitor, fixed, mica, 56 pF, ±5%, 300 V dc	04062	DM5EC560J
C13	1-900098-029	Capacitor, fixed, mica, 82 pF, ±5%, 300 V dc	04062	DM5EC820J
C14	1-900098-025	Capacitor, fixed, mica, 56 pF, ±5%, 300 V dc	04062	DM5EC560J
C15	1-900077-002	Capacitor, fixed, ceramic, 0.01 μF, ±20%, 100 V dc	56289	TG-S10
C16	1-900098-015	Capacitor, fixed, mica, 24 pF, ±5%, 300 V dc	04062	DM5CC240J
C17	1-900066-139	Capacitor, fixed, ceramic, 5.1 pF, ±5%, 500 V dc	95121	QC5.1+5%
C18	1-900066-123	Capacitor, fixed, ceramic, 1 pF, ±5%, 500 V dc	95121	MC1.0±5%
C19	1-900098-009	Capacitor, fixed, mica, 10 pF, ±5%, 300 V dc	04062	DM5CC100J
C20	1-900098-009	Capacitor, fixed, mica, 10 pF, ±5%, 300 V dc	04062	DM5CC100J
C21	1-900066-123	Capacitor, fixed, ceramic, 1 pF, ±5%, 500 V dc	95121	MC1.0±5%
C22	1-900066-139	Capacitor, fixed, ceramic, 5.1 pF, ±5%, 500 V dc	95121	QC5.1±5%
C23	1-900098-015	Capacitor, fixed, mica, 24 pF, ±5%, 300 V dc	04062	DM5CC240J
C24	1-900077-002	Capacitor, fixed, ceramic, 0.01 μF, +20%, 100 V dc	56289	TG-S10

Table 8-14. Parts List for Input Diode Switch, Mixer and Filter Assembly, A4A1 (Cont.)

Ref. Desig.	Singer Part No.	Description	Mfr. Code No.	Mfr. Part No.
C25	1-900104-006	Capacitor, fixed, ceramic, 0.47 μF, ±20%, 50 V dc	16508	3420-050E-474M
C26	1-900104-006	Capacitor, fixed, ceramic, 0.47 μF, ±20%, 50 V dc	16508	3420-050E-474M
C27	1-900113-002	Capacitor, variable, ceramic, 2 pF to 10 pF, 250 V dc	91293	9301
C28	1-900098-021	Capacitor, fixed, mica, 43 pF, ±5%, 300 V dc	04062	DM5EC430J
C29	1-900077-002	Capacitor, fixed, ceramic, 0.01 μF, ±20%, 100 V dc	56289	TG-S10
C30	1-900077-002	Capacitor, fixed, ceramic, 0.01 μF, ±20%, 100 V dc	56289	TG-S10
C31	1-900077-002	Capacitor, fixed, ceramic, 0.01 μF, ±20%, 100 V dc	56289	TG-S10
C32	1-900104-006	Capacitor, fixed, ceramic, 0.47 μF, ±20%, 50 V dc	16508	3420-050E-474M
C33	1-900113-002	Capacitor, variable, ceramic, 2 pF to 10 pF, 250 V dc	91293	9301
C34	1-900077-002	Capacitor, fixed, ceramic, 0.01 μF, ±20%, 100 V dc	56289	TG-S10
C35	1-900098-021	Capacitor, fixed, mica, 43 pF, ±5%, 300 V dc	04062	DM5EC430J
C36	1-900077-002	Capacitor, fixed, ceramic, 0.01 μF, ±20%, 100 V dc	56289	TG-S10
C37	1-900098-013	Capacitor, fixed, mica, 20 pF, ±5%, 300 V dc	04062	DM5EC200J
C38	1-900104-006	Capacitor, fixed, ceramic, 0.47 μF, ±20%, 50 V dc	56289	3420-050E-474M
C39	1-900113-002	Capacitor, variable, ceramic, 2 pF to 10 pF, 250 V dc	91293	9301
C40	1-900077-002	Capacitor, fixed, ceramic, 0.01 μF, ±20%, 100 V dc	56289	TG-S10
C41	1-900077-002	Capacitor, fixed, ceramic, 0.01 μF, ±20%, 100 V dc	56289	TG-S10
C42	1-900077-002	Capacitor, fixed, ceramic, 0.01 μF, ±20%, 100 V dc	56289	TG-S10
C43	1-900077-002	Capacitor, fixed, ceramic, 0.01 μF, ±20%, 100 V dc	56289	TG-S10
C44	1-900077-002	Capacitor, fixed, ceramic, 0.01 μF, ±20%, 100 V dc	56289	TG-S10
C45	1-900077-002	Capacitor, fixed, ceramic, 0.01 μF, ±20%, 100 V dc	56289	TG-S10
C46	1-900077-002	Capacitor, fixed, ceramic, 0.01 μF, ±20%, 100 V dc	56289	TG-S10
C47	1-900113-002	Capacitor, variable, ceramic, 2 pF to 10 pF, 250 V dc	91293	9301
C48	1-900098-022	Capacitor, fixed, mica, 47 pF, ±5%, 300 V dc	04062	DM5EC470J

Table 8-14. Parts List for Input Diode Switch, Mixer and Filter Assembly, A4A1 (Cont.)

Ref. Desig.	Singer Part No.	Description	Mfr. Code No.	Mfr. Part No.
C49	1-900098-011	Capacitor, fixed, mica 15 pF, ±5%, 300 V dc	04062	DM5CC150J
C50		Not used		
C51	1-900066-145	Capacitor, fixed, ceramic, 8.2 pF, ±5%, 500 V dc	95121	QC8.2 ±5%
C52		Not used		
C53		Not used		
C54	1-900098-016	Capacitor, fixed, mica, 27 pF, ±5%, 300 V dc	04062	DM5EC270J
C55	1-900066-145	Capacitor, fixed, ceramic, 8.2 pF, ±5%, 500 V dc	95121	QC8.2 ±5%
C56	1-900098-016	Capacitor, fixed, mica, 27 pF, ±5%, 300 V dc	04062	DM5EC270J
C57		Not used		
C58		Not used		
C59	1-900098-016	Capacitor, fixed, mica, 27 pF, ±5%, 300 V dc	04062	DM5EC270J
C60	1-900066-145	Capacitor, fixed, ceramic, 8.2 pF, ±5%, 500 V dc	95121	QC8.2 ±5%
C61	1-900098-011	Capacitor, fixed, mica. 15 pF, ±5%, 300 V dc	04062	DM5CC150J
C62		Not used		
C63		Not used		
C64	1-900077-002	Capacitor, fixed, ceramic, 0.01 μF, ±20%, 100 V dc	56289	TG-S10
C65	1-900066-037	Capacitor, fixed, mica, 180 pF, ±5%, 100 V dc	04062	DM5FA181J
C66	1-900077-002	Capacitor, fixed, ceramic, 0.01 μF, ±20%, 100 V dc	56289	TG-S10
C67	1-900077-002	Capacitor, fixed, ceramic, 0.01 μF, ±20%, 100 V dc	56289	TG-S10
C68	1-900077-002	Capacitor, fixed, ceramic, 0.01 μF, ±20%, 100 V dc	56289	TG-S10
C69	1-900098-030	Capacitor, fixed, mica, 91 pF, ±5%, 300 V dc	04062	DM5FC910J
C70	1-900098-008	Capacitor, fixed, mica, 8 pF, ±10%, 300 V dc	04062	DM5CC080K
C71	1-900113-001	Capacitor, variable, ceramic, 2.5 pF to 20 pF, 500 V dc	91203	9302
C72	1-900104-006	Capacitor, fixed, ceramic, 0.47 μF, ±20%, 50 V dc	16508	3420-050E-474M

Table 8-14. Parts List for Input Diode Switch, Mixer and Filter Assembly, A4A1 (Cont.)

Ref. Desig.	Singer Part No.	Description	Mfr. Code No.	Mfr. Part No.
C73	1-90077-002	Capacitor, fixed, ceramic, 0.01 μF, ±20%, 100 V dc	56289	TG-S10
C74		Not used		
C75	1-900098-016	Capacitor, fixed, mica, 27 pF, ±5%, 300 V dc	04062	DM5EC270D
C76	1-900098-020	Capacitor, fixed, mica 39 pF, ±5%, 300 V dc	04062	DM5EC390D
CR1	1-913005-001	Diode, germanium, Vr=30 V, If=100 mA	03877	1N273
CR2	1-913005-001	Diode, germanium, Vr=30 V, If=100 mA	03877	1N273
CR3	1-913005-001	Diode, germanium, Vr=30 V, If=100 mA	03877	1N273
CR4	1-913005-001	Diode, germanium, Vr=30 V, If=100 mA	03877	1N273
CR5	1-913005-001	Diode, germanium, Vr=30 V, If=100 mA	03877	1N273
CR6	1-913005-001	Diode, germanium, Vr=30 V, If=100 mA	03877	1N273
CR7	1-913005-001	Diode, germanium, Vr=30 V, If = 100 mA	03877	1N273
CR8	1-913005-001	Diode, germanium, Vr=30 V, If=100 mA	03877	1N273
FL1	1-906013-001	Bead, Ferrite	02114	56-590-65/4B
J1	1-950031-003	Connector, jack, 1 pin	00779	2-332070-5
J2	1-950031-003	Connector, jack, 1 pin	00779	2-332070-5
J3	1-950031-003	Connector, jack, 5 pin	00779	2-332070-5
J4	1-950031-003	Connector, jack, 1 pin	00779	2-332070-5
J5	1-950031-003	Connector, jack, 5 pin	00779	2-332070-5
J6	1-950031-003	Connector, jack, 5 pin	00779	2-332070-5
J7	1-950031-003	Connector, jack, 5 pin	00779	2-332070-5
L1	1-906043-025	Inductor, fixed, 10 μH, ±10%, 290 mA	81564	4025
L2	1-906043-025	Inductor, fixed, 10 μH, ±10%, 290 mA	81564	4025
L3	1-906043-001	Inductor, fixed, 0.1 μH, ±10%, 1650 mA	81564	4001
L4	1-906043-001	Inductor, fixed, 0.1 μH, ±10%, 1650 mA	81564	4001
L5	1-403801-006	Inductor, fixed, 6 turns	88869	
L6	1-403801-006	Inductor, fixed, 6 turns	88869	
L7	1-403801-006	Inductor, fixed, 6 turns	88869	
L8		Not used		

Table 8-14. Parts List for Input Diode Switch, Mixer and Filter Assembly, A4A1 (Cont.)

Ref. Desig.	Singer Part No.	Description	Mfr. Code No.	Mfr. Part No.
L9		Not used		
L10		Not used		
L11	1-906043-010	Inductor, fixed, 0.56 μH, ±10%, 980 mA	81564	4010
L12		Not used		
L13	1-403801-007	Inductor fixed, 7 turns	88869	
L14		Not used		
L15	1-403801-007	Inductor, fixed, 7 turns	88869	
L16	1-403801-007	Inductor, fixed, 7 turns	88869	
L17	1-403801-007	Inductor, fixed, 7 turns	88869	
L18	1-906043-014	Inductor, fixed, 1.2 μH, ±10%, 800 mA	81564	4014
L19	1-906043-014	Inductor, fixed 1.2 μH, ±10%, 800 mA	81564	4014
L20		Not used		
L21	1-906043-025	Inductor, fixed, 10 μH, ±10%, 290 mA	81564	4025
Q1	1-958000-002	Transistor, silicon, PNP	04713	2N3906-5
Q2	1-958000-002	Transistor, silicon, PNP	04713	2N3906-5
Q3	1-958018-001	Transistor, silicon, NPN	31718	2N5179
Q4	1-958018-001	Transistor, silicon, NPN	31718	2N5179
Q5	1-958018-001	Transistor, silicon, NPN	31718	2N5179
Q6	1-958018-001	Transistor, silicon, NPN	31718	2N5179
Q7	1-958018-001	Transistor, silicon, NPN	31718	2N5179
R1	1-945000-049	Resistor, fixed, composition, 10 kilohm, ±10%, 1/4 W	01121	CB1031
R2	1-945000-048	Resistor, fixed, composition, 8.2 kilohm, ±10%, 1/4 W	01121	CB8221
R3	1-945000-034	Resistor, fixed, composition, 560 ohm, ±10%, 1/4 W	01121	CB5611
R4	1-945000-014	Resistor, fixed, composition, 12 ohm, ±10%, 1/4 W	01121	CB1201
R5	1-945000-036	Resistor, fixed, composition, 820 ohm, ±10%, 1/4 W	01121	CB8211
R6	1-945000-029	Resistor, fixed, composition, 220 ohm, ±10%, 1/4 W	01121	CB2211
R7	1-945000-036	Resistor, fixed, composition, 820 ohm, ±10%, 1/4 W	01121	CB8211

Table 8-14. Parts List for Input Diode Switch, Mixer and Filter Assembly, A4A1 (Cont.)

Ref. Desig.	Singer Part No.	Description	Mfr. Code No.	Mfr. Part No.
R8	1-945000-049	Resistor, fixed, composition, 10 kilohm, ±10%, 1/4 W	01121	CB1031
R9	1-945000-048	Resistor, fixed, composition, 8.2 kilohm, ±10%, 1/4 W	01121	CB8221
R10	1-945000-034	Resistor, fixed, composition, 560 ohm, ±10%, 1/4 W	01121	CB5611
R11	1-945000-014	Resistor, fixed, composition, 12 ohm, ±10%, 1/4 W	01121	CB1201
R12	1-945000-029	Resistor, fixed, composition, 220 ohm, ±10%, 1/4 W	01121	CB2211
R13	1-945000-036	Resistor, fixed, composition, 820 ohm, ±10%, 1/4 W	01121	CB8211
R14	1-945000-037	Resistor, fixed, composition, 1 kilohm, ±10%, 1/4 W	01121	CB1021
R15	1-945000-142	Resistor, fixed, composition, 150 ohm, ±5%, 1/4 W	01121	CB1515
R16	1-945000-126	Resistor, fixed, composition, 33 ohm, ±5%, 1/4 W	01121	CB3305
R17	1-945000-142	Resistor, fixed, composition, 150 ohm, ±5%, 1/4 W	01121	CB1515
R18	1-945000-050	Resistor, fixed, composition, 12 kilohm, ±10%, 1/4 W	01121	CB1231
R19	1-945000-045	Resistor, fixed, composition, 4.7 kilohm, ±10%, 1/4 W	01121	CB4721
R20	1-945000-020	Resistor, fixed, composition, 39 ohm, ±10%, 1/4 W	01121	CB3901
R21	1-945000-026	Resistor, fixed, composition, 120 ohm, ±10%, 1/4 W	01121	CB1211
R22	1-945000-031	Resistor, fixed, composition, 330 ohm, ±10%, 1/4 W	01121	CB3311
R23	1-945000-025	Resistor, fixed, composition, 100 ohm, ±10%, 1/4 W	01121	CB1011
R24	1-945000-050	Resistor, fixed, composition, 12 kilohm, ±10%, 1/4 W	01121	CB1231
R25	1-945000-045	Resistor, fixed, composition, 4.7 kilohm, ±10%, 1/4 W	01121	CB4721
R26	1-945000-017	Resistor, fixed, composition, 22 ohm, ±10%, 1/4 W	01121	CB2201
R27	1-945000-026	Resistor, fixed, composition, 120 ohm, ±10%, 1/4 W	01121	CB1211
R28	1-945000-031	Resistor, fixed, composition, 330 ohm, ±10%, 1/4 W	01121	CB3311
R29	1-945000-015	Resistor, fixed, composition, 15 ohm, ±10%, 1/4 W	01121	CB1501
R30	1-945160-001	Resistor, variable, cermet, 100 ohm, ±20%, 1/4 W	32997	3352E101
R31	1-945000-029	Resistor, fixed, composition, 220 ohm, ±10%, 1/4 W	01121	CB2211

Table 8-15. Parts List for 90 MHz Multiplier Assembly, A4A2

Ref. Desig.	Singer Part No.	Description	Mfr. Code No.	Mfr. Part No.
C1	1-900077-002	Capacitor, fixed, ceramic, 0.01 μF, ±20%, 100 V dc	56289	TG-S10
C2	1-900077-002	Capacitor, fixed, ceramic, 0.01 μF, ±20%, 100 V dc	56289	TG-S10
C3	1-900077-002	Capacitor, fixed, ceramic, 0.01 μF, ±20%, 100 V dc	56289	TG-S10
C4	1-900077-002	Capacitor, fixed, ceramic, 0.01 μF, ±20%, 100 V dc	56289	TG-S10
C5	1-900077-002	Capacitor, fixed, ceramic, 0.01 μF, ±20%, 100 V dc	56289	TG-S10
C6	1-900117-001	Capacitor, variable, ceramic, 2.8 pF to 10 pF, 250 V dc	91293	9312
C7	1-900077-002	Capacitor, fixed, ceramic, 0.01 μF, ±20%, 100 V dc	56289	TG-S10
C8	1-900117-001	Capacitor, variable, ceramic, 2.8 pF to 10 pF, 250 V dc	91293	9312
C9	1-900098-011	Capacitor, fixed, mica, 15 pF, ±5%, 300 V dc	04062	DM5CC150J
C10	1-900098-002	Capacitor, fixed, mica, 2 pF, ±0.5 pF, 300 V dc	04062	DM5CC020D
C11	1-900077-002	Capacitor, fixed, ceramic, 0.01 μF, ±20%, 100 V dc	56289	TG-S10
C12	1-900117-001	Capacitor, variable, ceramic, 2.8 pF to 10 pF, 250 V dc	91293	9312
C13	1-900098-011	Capacitor, fixed, mica, 15 pF, ±5%, 300 V dc	04062	DM5CC150J
C14	1-900098-001	Capacitor, fixed, mica, 1.0 pF, ±0.5 pF, 300 V dc	04062	DM5CC010D
C15	1-900117-001	Capacitor, variable, ceramic, 2.8 pF to 10 pF, 250 V dc	91293	9312
C16	1-900098-022	Capacitor, fixed, mica, 47 pF, ±5%, 300 V dc	04062	DM5EC470J
C17	1-900098-001	Capacitor, fixed, mica, 1.0 pF, ±0.5 pF, 300 V dc	04062	DM5CC010D
C18	1-900117-001	Capacitor, variable, ceramic, 2.8 pF to 10 pF, 250 V dc	91293	9312
C19	1-900098-025	Capacitor, fixed, mica, 56 pF, ±5%, 300 V dc	04062	DM5EC560J
C20	1-900071-114	Capacitor, fixed, mica, 240 pF, ±5%, 500 V dc	72136	DM10241J
J1	1-950031-003	Connector, jack, 3 pins	00779	2-332070-5
J2	1-950031-003	Connector, jack, 3 pins	00779	2-332070-5
J3		Not used		
J4	1-950031-003	Connector, jack, 1 pin	00779	2-332070-5
L1	1-403801-007	Inductor, fixed, 7 turns	88869	
L2	1-403801-007	Inductor, fixed, 7 turns	88869	

Table 8-15. Parts List for 90 MHz Multiplier Assembly, A4A2 (Cont.)

Ref. Desig.	Singer Part No.	Description	Mfr. Code No.	Mfr. Part No.
L3	1-403801-004	Inductor, fixed 4 turns	88869	
L4	1-403801-004	Inductor, fixed, 4 turns	88869	
Q1	1-958000-001	Transistor, silicon, NPN	04713	2N3904-5
Q2	1-958000-001	Transistor, silicon, NPN	04713	2N3904-5
Q3	1-958018-001	Transistor, silicon, NPN	31718	2N5179
Q4	1-958018-001	Transistor, silicon, NPN	31718	2N5179
R1	1-945000-025	Resistor, fixed, composition, 100 ohm, ±10%, 1/4 W	01121	CB1011
R2	1-945000-051	Resistor, fixed, composition, 15 kilohm, ±10%, 1/4 W	01121	CB1531
R3	1-945000-048	Resistor, fixed, composition, 8.2 kilohm, ±10%, 1/4 W	01121	CB8221
R4	1-945000-025	Resistor, fixed, composition, 100 ohm, ±10%, 1/4 W	01121	CB1011
R5	1-945000-031	Resistor, fixed, composition, 330 ohm, ±10%, 1/4 W	01121	CB3311
R6	1-945000-032	Resistor fixed, composition, 390 ohm, ±10%, 1/4 W	01121	CB3911
R7	1-945000-050	Resistor, fixed, composition, 12 kilohm, ±10%, 1/4 W	01121	CB1231
R8	1-945000-049	Resistor, fixed, composition, 10 kilohm, ±10%, 1/4 W	01121	CB1031
R9	1-945000-025	Resistor, fixed, composition, 100 ohm, ±10%, 1/4 W	01121	CB1011
R10	1-945000-031	Resistor, fixed, composition, 330 ohm, ±10%, 1/4 W	01121	CB3311
R11	1-945000-025	Resistor, fixed, composition, 100 ohm, ±10%, 1/4 W	01121	CB1011
R12	1-945000-146	Resistor, fixed, composition, 220 ohm, ±5%, 1/4 W	01121	CB2211
R13	1-945000-138	Resistor, fixed, composition, 100 ohm, ±5%, 1/4 W	01121	CB1015
R14	1-945000-021	Resistor, fixed, composition, 47 ohm, ±10%, 1/4 W	01121	CB4701
R15	1-945000-043	Resistor, fixed, composition, 3.3 kilohm, ±10%, 1/4 W	01121	CB3321
R16	1-945000-051	Resistor, fixed, composition, 15 kilohm, ±10%, 1/4 W	01121	CB1531
R17	1-945000-025	Resistor, fixed, composition, 100 ohm, ±10%, 1/4 W	01121	CB1011
R18	1-945000-019	Resistor, fixed, composition, 33 ohm, ±10%, 1/4 W	01121	CB3301
R19	1-945160-004	Resistor, variable, cermet, 500 ohm, ±20%, 1/4 W	32997	3352E501
R20		Not used		
R21		Not used		

Table 8-15. Parts List for 90 MHz Multiplier Assembly, A4A2 (Cont.)

Ref. Desig.	Singer Part No.	Description	Mfr. Code No.	Mfr. Part No.
R22		Not used		
R23		Not used		
R24		Not used		
R25		Not used		
R26	1-945000-184	Resistor, fixed, composition, 8.2 kilohm, ±5%, 1/4 W	01121	CB8225

Table 8-16. Parts List for 810 MHz Multiplier Assembly, A4A3

Ref. Desig.	Singer Part No.	Description	Mfr. Code No.	Mfr. Part No.
C1	1-900077-002	Capacitor, fixed, ceramic, 0.01μ F, ±20%, 100 V dc	56289	TG-S10
C2	1-900001-013	Capacitor, fixed, plastic, 0.1 μF, ±20%, 250 V dc	73445	C280AE,0.1μF
C3	1-900113-001	Capacitor, variable, ceramic, 2.5 pF to 20 pF, 500 V dc	91293	9302
C4	1-900098-014	Capacitor, fixed, mica, 22 pF, ±5%, 300 V dc	04062	DM5CC220J
C5	1-900098-022	Capacitor, fixed, mica, 47 pF, ±5%, 300 V dc	04062	DM5EC470J
C6	1-900001-013	Capacitor, fixed, plastic, 0.1 μF, ±20%, 250 V dc	73445	C280AE,0.1μF
C7	1-900113-002	Capacitor, variable, ceramic, 2 pF to 10 pF, 250 V dc	91293	9301
C8	1-900063-002	Capacitor, variable, glass, 1.0 pF to 10 pF, 500 V dc	0000A	GSG083
C9	1-900045-001	Capacitor, fixed, feed-thru, 470 pF, ±20%, 500 V dc	33095	FA5C-4712
C10	1-900066-026	Capacitor, fixed, ceramic, 1.5 pF, ±10%, 500 V dc	95121	MC-1.5±10%
C11	1-900113-002	Capacitor, variable, ceramic, 2 pF to 10 pF, 250 V dc	91293	9301
C12	1-900063-002	Capacitor, variable, glass, 1.0 pF to 10 pF, 500 V dc	0000A	GSG083
C13	1-900045-001	Capacitor, fixed, feed-thru, 470 pF, ±20%, 500 V dc	33095	FA5C-4712
C14	1-900066-026	Capacitor, fixed, ceramic, 1.5 pF, ±10%, 500 V dc	95121	MC-1.5±10%
C15	1-900113-002	Capacitor, variable, ceramic, 2 pF to 10 pF, 250 V dc	91293	9301
C16	1-900063-002	Capacitor, variable, glass, 1.0 pF to 10 pF, 500 V dc	0000A	GSG083
C17	1-900045-001	Capacitor, fixed, feed-thru, 470 pF, ±20%, 500 V dc	33095	FA5C-4712
C18	1-900066-026	Capacitor, fixed, ceramic, 1.5 pF, ±10%, 500 V dc	95121	MC-1.5±10%
C19	1-900066-026	Capacitor, fixed, ceramic, 1.5 pF, ±10%, 500 V dc	95121	MC-1.5±10%
FL1	2-202387-001	Filter, cavity	88869	
J1	1-950031-003	Connector, jack, 3 pins	00779	2-332070-5
J2	1-950031-003	Connector, jack, 1 pin	00779	2-332070-5
J3	1-950031-003	Connector, jack, 3 pins	00779	2-332070-5
Q1	1-958018-001	Transistor, silicon, NPN	31718	2N5179
Q2	1-958101-001	Transistor, silicon, NPN	04713	2N6304
Q3	1-958101-001	Transistor, silicon, NPN	04713	2N6304
Q4	1-958101-001	Transistor, silicon, NPN	04713	2N6304
R1	1-945000-047	Resistor, fixed, composition, 6.8 kilohm, ±10%, 1/4 W	01121	CB6821

Table 8-16. Parts List for 810 MHz Multiplier Assembly, A4A3 (Cont.)

Ref. Desig.	Singer Part No.	Description	Mfr. Code No.	Mfr. Part No.
R2	1-945000-036	Resistor, fixed, composition, 820 ohm, ±10%, 1/4 W	01121	CB8211
R3	1-945000-025	Resistor, fixed, composition, 100 ohm, ±10%, 1/4 W	01121	CB1011
R4	1-945000-025	Resistor, fixed, composition, 100 ohm, ±10%, 1/4 W	01121	CB1011
R5	1-945000-018	Resistor, fixed, composition, 27 ohm, ±10%, 1/4 W	01121	CB2701
R6	1-945000-162	Resistor, fixed, composition, 1 kilohm, ±5%, 1/4 W	01121	CB1025
R7	1-945000-142	Resistor, fixed, composition, 150 ohm, ±5%, 1/4 W	01121	CB1515
R8	1-945000-055	Resistor, fixed, composition, 33 kilohm, ±10%, 1/4 W	01121	CB3331
R9	1-945000-027	Resistor, fixed, composition, 150 ohm, ±10%, 1/4 W	01121	CB1511
R10	1-945000-053	Resistor, fixed, composition, 22 kilohm, ±10%, 1/4 W	01121	CB2231
R11	1-945000-027	Resistor, fixed, composition, 150 ohm, ±10%, 1/4 W	01121	CB1511
R12	1-945000-196	Resistor, fixed, composition, 27 kilohm, ±5%, 1/4 W	01121	CB2735
T1	1-403801-007	Autotransformer, tapped 7 turns	88869	
T2	1-999001-003	Autotransformer, tapped, 1 turn	88869	
T3	1-999001-003	Autotransformer, tapped, 1 turn	88869	
T4	1-999001-003	Autotransformer, tapped 1 turn	88869	

Table 8-17. Parts List for 930 MHz Amplifier Assembly, A4A4

Ref. Desig.	Singer Part No.	Description	Mfr. Code No.	Mfr. Part No.
C1	1-900117-001	Capacitor, variable, ceramic, 2.8 pF to 10 pF, 250 V dc	91293	9312
C2	1-900117-001	Capacitor, variable, ceramic, 2.8 pF to 10 pF, 250 V dc	91293	9312
C3	1-900117-001	Capacitor, variable, ceramic, 2.8 pF to 10 pF, 250 V dc	91293	9312
C4	1-900117-001	Capacitor, variable, ceramic, 2.8 pF to 10 pF, 250 V dc	91293	9312
C5	1-900063-002	Capacitor, variable, glass, 1.0 pF to 10 pF, 500 V dc	0000A	GSG083
C6	1-900063-002	Capacitor, variable, glass, 1.0 pF to 10 pF, 500 V dc	0000A	GSG083
C7	1-900063-002	Capacitor, variable, glass, 1.0 pF to 10 pF, 500 V dc	0000A	GSG083
C8	1-900045-001	Capacitor, fixed, feed-thru, 470 pF, ±20%, 500 V dc	33095	FA5C-4712
C9	1-900045-001	Capacitor, fixed, feed-thru, 470 pF, ±20%, 500 V dc	33095	FA5C-4712
C10	1-900045-001	Capacitor, fixed, feed-thru, 470 pF, ±20%, 500 V dc	33095	FA5C-4712
C11	1-900045-001	Capacitor, fixed, feed-thru, 470 pF, ±20%, 500 V dc	33095	FA5C-4712
C12	1-900045-001	Capacitor, fixed, feed-thru, 470 pF, ±20%, 500 V dc	33095	FA5C-4712
C13	1-900045-001	Capacitor, fixed, feed-thru, 470 pF, ±20%, 500 V dc	33095	FA5C-4712
C14		Not used		
C15		Not used		
C16	1-900066-033	Capacitor, fixed, ceramic, 3 pF, ±10%, 500 V dc	95121	MC-3.0±10%
C17	1-900066-033	Capacitor, fixed, ceramic, 3 pF, ±10%, 500 V dc	95121	MC-3.0±10%
C18	1-900066-033	Capacitor, fixed, ceramic, 3 pF, ±10%, 500 V dc	95121	MC-3.0±10%
C19		Not used		
C20		Not used		
C21	1-900066-023	Capacitor, fixed, ceramic, 1 pF, ±10%, 500 V dc	95121	MC-1.0±10%
FL1	1-906046-003	Bead, Ferrite	33062	11-040
FL2	1-906046-003	Bead, Ferrite	33062	11-040
J1	1-950031-003	Connector, jack, 3 pins	00779	2-332070-5
J2	1-950031-003	Connector, jack, 1 pin	00779	2-332070-5
J3	1-950031-003	Connector, jack, 3 pins	00779	2-332070-5
L1	1-403811-001	Inductor, fixed, 1 turn	88869	
L2	1-403924-001	Inductor, fixed, 1 turn	88869	
L3	1-403811-001	Inductor, fixed, 1 turn	88869	

Table 8-17. Parts List for 930 MHz Amplifier Assembly, A4A4 (Cont.)

Ref. Desig.	Singer Part No.	Description	Mfr. Code No.	Mfr. Part No.
L4	1-403924-001	Inductor, fixed, 1 turn	88869	
L5	1-403811-001	Inductor, fixed, 1 turn	88869	
L6	1-403813-001	Inductor, fixed 1 turn	88869	
Q1	1-958101-001	Transistor, silicon, NPN	04713	2N6304
Q2	1-958101-001	Transistor, silicon, NPN	04713	2N6304
Q3	1-958101-001	Transistor, silicon, NPN	04713	2N6304
R1	1-945000-197	Resistor, fixed, composition, 30 kilohm, ±5%, 1/4 W	01121	CB3035
R2	1-945000-197	Resistor, fixed, composition, 30 kilohm, ±5%, 1/4 W	01121	CB3035
R3	1-945000-192	Resistor, fixed, composition, 18 kilohm, ±5%, 1/4 W	01121	CB1835
R4	1-945000-025	Resistor, fixed, composition, 100 ohm, ±10%, 1/4 W	01121	CB1011
R5	1-945000-025	Resistor, fixed, composition, 100 ohm, ±10%, 1/4 W	01121	CB1011
R6	1-945000-025	Resistor, fixed, composition, 100 ohm, ±10%, 1/4 W	01121	CB1011
R7		Not used		
R8		Not used		
R9		Not used		
R10		Not used		
R11		Not used		
R12		Not used		
R13		Not used		
R14		Not used		
R15		Not used		
R16	1-945000-124	Resistor, fixed, composition, 27 ohm, ±5%, 1/4 W	01121	CB2705

Table 8-18. Parts List for AM Modulator and Diode Switch Assembly, A4A5

Ref. Desig.	Singer Part No.	Description	Mfr. Code No.	Mfr. Part No.
C1	1-900001-013	Capacitor, fixed, plastic, 0.1 μF, ±20%, 250 V dc	73445	C280AE,0.1μF
C2	1-900098-011	Capacitor, fixed, mica, 15 pF, ±5%, 300 V dc	04062	DM5CC150J
C3	1-900077-002	Capacitor, fixed, ceramic, 0.01 μF, ±20%, 100 V dc	56289	TG-S10
C4	1-900077-002	Capacitor, fixed, ceramic, 0.01 μF, ±20%, 100 V dc	56289	TG-S10
C5	1-900098-035	Capacitor, fixed, mica, 150 pF, ±5%, 100 V dc	04062	DM5FA151J
C6	1-900098-035	Capacitor, fixed, mica 150 pF, ±5%, 100 V dc	04062	DM5FA151J
C7	1-900001-121	Capacitor, fixed, plastic 0.47 μF, ±10%, 250 V dc	73445	C280AE,0.47μF
C8	1-900077-002	Capacitor, fixed, ceramic, 0.01 μF, ±20%, 100 V dc	56289	TG-S10
C9	1-900077-002	Capacitor, fixed, ceramic, 0.01 μF, ±20%, 100 V dc	56289	TG-S10
C10	1-900001-013	Capacitor, fixed, plastic 0.1 μF, ±20%, 250 V dc	73445	C280AE,0.1μF
C11	1-900001-005	Capacitor, fixed, plastic, 0.022 μF, ±20%, 250 V dc	73445	C280AE,0.022μF
C12	1-900115-010	Capacitor, fixed, tantalum, 150 μF, ±20%, 15 V dc	12954	D150GS1D15M
C13	1-900077-002	Capacitor, fixed, ceramic, 0.01 μF, ±20%, 100 V dc	56289	TG-S10
C14	1-900077-002	Capacitor, fixed, ceramic, 0.01 μF, ±20%, 100 V dc	56289	TG-S10
C15	1-900077-002	Capacitor, fixed, ceramic, 0.01 μF, ±20%, 100 V dc	56289	TG-S10
C16	1-900077-002	Capacitor, fixed, ceramic, 0.01 μF, ±20%, 100 V dc	56289	TG-S10
C17	1-900077-002	Capacitor, fixed, ceramic, 0.01 μF, ±20%, 100 V dc	56289	TG-S10
C18	1-900077-002	Capacitor, fixed, ceramic, 0.01 μF, ±20%, 100 V dc	56289	TG-S10
C19	1-900077-002	Capacitor, fixed, ceramic, 0.01 μF, ±20%, 100 V dc	56289	TG-S10
C20	1-900077-002	Capacitor, fixed, ceramic, 0.01 μF, ±20%, 100 V dc	56289	TG-S10
C21	1-900077-002	Capacitor, fixed, ceramic, 0.01 μF, ±20%, 100 V dc	56289	TG-S10
C22	1-900077-002	Capacitor, fixed, ceramic, 0.01 μF, ±20%, 100 V dc	56289	TG-S10
C23	1-900077-002	Capacitor, fixed, ceramic, 0.01 μF, ±20%, 100 V dc	56289	TG-S10
C24	1-900077-002	Capacitor, fixed, ceramic, 0.01 μF, ±20%, 100 V dc	56289	TG-S10

Table 8-18. Parts List for AM Modulator and Diode Switch Assembly, A4A5 (Cont.)

Ref. Desig.	Singer Part No.	Description	Mfr. Code No.	Mfr. Part No.
C25	1-900077-002	Capacitor, fixed, ceramic, 0.01 μF, ±20%, 100 V dc	56289	TG-S10
C26	1-900077-002	Capacitor, fixed, ceramic, 0.01 μF, ±20%, 100 V dc	56289	TG-S10
C27	1-900077-002	Capacitor, fixed, ceramic, 0.01 μF, ±20%, 100 V dc	56289	TG-S10
C28	1-900077-002	Capacitor, fixed, ceramic, 0.01 μF, ±20%, 100 V dc	56289	TG-S10
C29	1-900077-002	Capacitor, fixed, ceramic, 0.01 μF, ±20%, 100 V dc	56289	TG-S10
C30	1-900098-035	Capacitor, fixed, mica 150 pF, ±5%, 100 V dc	04062	DM5FA151J
C31	1-900077-002	Capacitor, fixed, ceramic, 0.01 μF, ±20%, 100 V dc	56289	TG-S10
C32	1-900098-038	Capacitor, fixed, mica, 200 pF, ±5%, 100 V dc	04062	DM5FA201J
C33		Not used		
C34	1-900077-002	Capacitor, fixed, ceramic, 0.01 μF, ±20%, 100 V dc	56289	TG-S10
C35	1-900098-011	Capacitor, fixed, mica, 15 pF, ±5%, 300 V dc	04062	DM5CC150J
C36	1-900077-002	Capacitor, fixed, ceramic, 0.01 μF, ±20%, 100 V dc	56289	TG-S10
C37	1-900117-001	Capacitor, variable, ceramic, 2.8 pF to 10 pF, 250 V dc	91293	9312
C38	1-900098-045	Capacitor, fixed, mica, 390 pF, ±5%, 50 V dc	04062	DM5FY391J
C39	1-900098-008	Capacitor, fixed, mica, 8 pF, ±10%, 300 V dc	04062	DM5CC080K
C40	1-900098-011	Capacitor, fixed, mica, 15 pF, ±5%, 300 V dc	04062	DM5CC150J
C41	1-900098-008	Capacitor, fixed, mica, 8 pF, ±10%, 300 V dc	04062	DM5CC080K
C42	1-900001-013	Capacitor, fixed, plastic, 0.1 μF, ±20%, 250 V dc	73445	C280AE,0.1μF
C43	1-900133-001	Capacitor, fixed, chip, 0.01 μF, ±10%, 50 V	56289	11C1812X7R103K500F
CR1	1-913091-001	Diode, silicon Vr=5V, If=20 mA	28480	5082-2835
CR2	1-913085-001	Diode, silicon, Vr=75 V, If=20 mA	50273	1N3062
CR3	1-913005-001	Diode, germanium, Vr=30 V, If=100 mA	03877	1N273
CR4	1-913005-001	Diode, germanium, Vr=30 V, If=100 mA	03877	1N273
CR5	1-913005-001	Diode, germanium, Vr=30 V, If=100 mA	03877	1N273
CR6	1-913005-001	Diode, germanium, Vr=30 V, If=100 mA	03877	1N273

Table 8-18. Parts List for AM Modulator and Diode Switch Assembly, A4A5 (Cont.)

Ref. Desig.	Singer Part No.	Description	Mfr. Code No.	Mfr. Part No.
CR7	1-913005-001	Diode, germanium, Vr=30 V, If=100 mA	03877	1N273
CR8	1-913005-001	Diode, germanium, Vr=30 V, If=100 mA	03877	1N273
CR9	1-913005-001	Diode, germanium, Vr=30 V, If=100 mA	03877	1N273
CR10	1-913005-001	Diode, germanium, Vr=30 V, If=100 mA	03877	1N273
CR11	1-913005-001	Diode, germanium, Vr=30 V, If=100 mA	03877	1N273
CR12	1-913005-001	Diode, germanium, Vr=30 V, If=100 mA	03877	1N273
CR13	1-913005-001	Diode, germanium, Vr=30 V, If=100 mA	03877	1N273
CR14	1-913005-001	Diode, germanium, Vr=30 V, If=100 mA	03877	1N273
CR15	1-913005-001	Diode, germanium, Vr=30 V, If=100 mA	03877	1N273
CR16	1-913005-001	Diode, germanium, Vr=30 V, If=100 mA	03877	1N273
CR17	1-913005-001	Diode, germanium, Vr=30 V, If=100 mA	03877	1N273
CR18	1-913085-001	Diode, silicon, Vr=75 V, If=20 mA	50273	1N3062
CR19	1-913091-001	Diode, silicon, Vr=5 V, If=20 mA	28480	5082-2835
J1	1-950031-003	Connector, jack, 1 pin	00779	2-332070-5
J2	1-950031-003	Connector, jack, 3 pins	00779	2-332070-5
J3	1-950031-003	Connector, jack, 1 pin	00779	2-332070-5
J4	1-950031-003	Connector, jack, 1 pin	00779	2.332070-5
J5	1-950031-003	Connector, jack, 3 pins	00779	2-332070-5
J6	1-950031-003	Connector, jack, 1 pin	00779	2-332070-5
J7	1-950031-003	Connector, jack, 1 pin	00779	2-332070-5
J8	1-950031-003	Connector, jack, 3 pins	00779	2-332070-5
J9	1-950031-003	Connector, jack, 1 pin	00779	2-332070-5
J10	1-950031-003	Connector, jack, 1 pin	00779	2-332070-5
J11	1-950031-003	Connector, jack, 3 pins	00779	2-332070-5
J12	1-950031-003	Connector, jack, 1 pin	00779	2-332070-5
J13	1-950031-003	Connector, jack, 1 pin	00779	2-332070-5
J14	1-950031-003	Connector, jack, 3 pins	00779	2-332070-5
J15	1-950031-003	Connector, jack, 1 pin	00779	2-332070-5
J16	1-950031-003	Connector, jack, 1 pin	00779	2-332070-5
J17	1-950031-003	Connector, jack, 3 pins	00779	2-332070-5
J18	1-950031-003	Connector, jack, 3 pins	00779	2-332070-5
J19	1-950031-003	Connector, jack, 3 pins	00779	2-332070-5
J20	1-950031-003	Connector, jack, 1 pin	00779	2-332070-5

Table 8-18. Parts List for AM Modulator and Diode Switch Assembly, A4A5 (Cont.)

Ref. Desig.	Singer Part No.	Description	Mfr. Code No.	Mfr. Part No.
L1	1-906043-010	Inductor, fixed, 0.56 μH, ±10%, 980 mA	81564	4010
L2	1-906043-010	Inductor, fixed, 0.56 μH, ±10%, 980 mA	81564	4010
L3	1-906043-010	Inductor, fixed, 0.56 μH, ±10%, 980 mA	81564	4010
L4	1-906043-010	Inductor, fixed, 0.56 μH, ±10%, 980 mA	91564	4010
L5	1-906043-010	Inductor, fixed, 0.56 μH, ±10%, 980 mA	81564	4010
L6	1-906043-005	Inductor, fixed, 0.22 μH, ±10%, 1270 mA	81564	4005
L7	1-403028-008	Inductor, fixed, 8 turns	88869	
L8	1-403801-004	Inductor, fixed, 4 turns	88869	
L9	1-403801-004	Inductor, fixed, 4 turns	88869	
L10	1-906043-025	Inductor, fixed, 10 μH, ±10%, 290 mA	81564	4025
L11	1-906043-025	Inductor, fixed, 10 μH, ±10%, 290 mA	81564	4025
Q1	1-958000-002	Transistor, silicon, PNP	04713	2N3906-5
Q2	1-958000-002	Transistor, silicon, PNP	04713	2N3906-5
Q3	1-958000-002	Transistor, silicon, PNP	04713	2N3906-5
Q4	1-958000-001	Transistor, silicon, NPN	04713	2N3904-5
Q5	1-958000-002	Transistor, silicon, PNP	04713	2N3906-5
Q6	1-958000-002	Transistor, silicon, PNP	04713	2N3906-5
Q7	1-958000-002	Transistor, silicon, PNP	04713	2N3906-5
Q8	1-958099-001	Transistor, silicon, NPN	25403	BFR-91
R1	1-945000-197	Resistor, fixed, composition, 30 kilohm, ±5%, 1/4 W	01121	CB3035
R2	1-945000-181	Resistor, fixed, composition, 6.2 kilohm, ±5%, 1/4 W	01121	CB6225
R3	1-945000-205	Resistor, fixed, composition, 62 kilohm, ±5%, 1/4 W	01121	CB6235
R4	1-945000-057	Resistor, fixed, composition, 47 kilohm, ±10%, 1/4 W	01121	CB4731
R5	1-945162-011	Resistor, variable, cermet, 20 kilohm, ±20%, 1/2 W	01121	E2A203
R6	1-945000-062	Resistor, fixed, composition, 120 kilohm, ±10%, 1/4 W	01121	CB1241
R7	1-945000-193	Resistor, fixed, composition, 20 kilohm, ±5%, 1/4 W	01121	CB2035
R8	1-945027-230	Resistor, fixed, film, 2.43 kilohm, ±1%, 1/8 W	14674	RN55-D-2431F
R9	1-945162-014	Resistor, variable, cermet 200 kilohm, ±20%, 1/2 W	01121	E2A204

Table 8-18. Parts List for AM Modulator and Diode Switch Assembly, A4A5 (Cont.)

Ref. Desig.	Singer Part No.	Description	Mfr. Code No.	Mfr. Part No.
R10	1-945027-389	Resistor, fixed, film, 110 kilohm, ±1%, 1/8 W	14674	RN55-D-1103F
R11	1-945027-186	Resistor, fixed, film, 845 ohm, ±1%, 1/8 W	14674	RN55-D-8450F
R12	1-945027-385	Resistor, fixed, film, 100 kilohm, ±1%, 1/8 W	14674	RN55-D-1003F
R13	1-945027-261	Resistor, fixed, film, 5.11 kilohm, ±1%, 1/8 W	14674	RN55-D-5111F
R14	1-945027-385	Resistor, fixed, film, 100 kilohm, ±1%, 1/8 W	14674	RN55-D-1003F
R15	1-945027-261	Resistor, fixed, film, 5.11 kilohm, ±1%, 1/8 W	14674	RN55-D-5111F
R16	1-945000-077	Resistor, fixed, composition, 2.2 megohm, ±10%, 1/4 W	01121	CB2251
R17	1-945000-062	Resistor, fixed, composition, 120 kilohm, ±10%, 1/4 W	01121	CB1241
R18	1-945000-173	Resistor, fixed, composition, 3 kilohm, ±5%, 1/4 W	01121	CB3025
R19	1-945000-169	Resistor, fixed, composition, 2 kilohm, ±5%, 1/4 W	01121	CB2025
R20	1-945000-152	Resistor, fixed, composition, 390 ohm, ±5%, 1/4 W	01121	CB3915
R21	1-945000-145	Resistor, fixed, composition, 200 ohm, ±5%, 1/4 W	01121	CB2015
R22	1-945000-145	Resistor, fixed, composition, 200 ohm, ±5%, 1/4 W	01121	CB2015
R23	1-945000-169	Resistor, fixed, composition, 2 kilohm, ±5%, 1/4 W	01121	CB2025
R24	1-945162-009	Resistor, variable, cermet, 5 kilohm, ±20%, 1/2 W	01121	E2A502
R25	1-945000-173	Resistor, fixed, composition, 3 kilohm, ±5%, 1/4 W	01121	CB3025
R26	1-945027-202	Resistor, fixed, film, 1.24 kilohm, ±1%, 1/8 W	01121	RN55-D-1241F
R27		Not used		
R28		Not used		
R29		Not used		
R30	1-945000-049	Resistor, fixed, composition, 10 kilohm, ±10%, 1/4 W	01121	CB1031
R31	1-945000-039	Resistor, fixed, composition, 1.5 kilohm, ±10%, 1/4 W	01121	CB1521
R32	1-945000-041	Resistor, fixed, composition, 2.2 kilohm, ±10%, 1/4 W	01121	CB2221
R33	1-945000-049	Resistor, fixed, composition, 10 kilohm, ±10%, 1/4 W	01121	CB1031
R34	1-945000-039	Resistor, fixed, composition, 1.5 kilohm, ±10%, 1/4 W	01121	CB1521

Table 8-18. Parts List for AM Modulator and Diode Switch Assembly, A4A5 (Cont.)

Ref. Desig.	Singer Part No.	Description	Mfr. Code No.	Mfr. Part No.
R35	1-945000-041	Resistor, fixed, composition, 2.2 kilohm, ±10%, 1/4 W	01121	CB2221
R36	1-945000-050	Resistor, fixed, composition, 12 kilohm, ±10%, 1/4 W	01121	CB1231
R37	1-945000-050	Resistor, fixed, composition, 12 kilohm, ±10%, 1/	01121	CB1231
R38	1-945000-049	Resistor, fixed, composition, 10 kilohm, ±10%, 1/4 W	01121	CB1031
R39	1-945000-039	Resistor, fixed, composition, 1.5 kilohm, ±10%, 1/4 W	01121	CB1521
R40	1-945000-041	Resistor, fixed, composition, 2.2 kilohm, ±10%, 1/4 W	01121	CB2221
R41	1-945000-049	Resistor, fixed, composition, 10 kilohm, ±10%, 1/4 W	01121	CB1031
R42	1-945000-039	Resistor, fixed, composition, 1.5 kilohm, ±10%, 1/4 W	01121	CB1521
R43	1-945000-041	Resistor, fixed, composition, 2.2 kilohm, ±10%, 1/4 W	01121	CB2221
R44	1-945000-049	Resistor, fixed, composition, 10 kilohm, ±10%, 1/4 W	01121	CB1031
R45	1-945000-039	Resistor, fixed, composition, 1.5 kilohm, ±10%, 1/4 W	01121	CB1521
R46	1-945000-041	Resistor, fixed, composition, 2.2 kilohm, ±10%, 1/4 W	01121	CB2221
R47	1-945000-035	Resistor, fixed, composition, 680 ohm, ±10%, 1/4 W	01121	CB6811
R48	1-945000-115	Resistor, fixed, composition, 11 ohm, ±5%, 1/4 W	01121	CB1105
R49	1-945000-153	Resistor, fixed, composition, 430 ohm, ±5%, 1/4 W	01121	CB4315
R50	1-945000-153	Resistor, fixed, composition, 430 ohm, ±5%, 1/4 W	01121	CB4315
R51	1-945000-131	Resistor, fixed, composition, 51 ohm, ±5%, 1/4 W	01121	CB5105
R52	1-945000-145	Resistor, fixed, composition, 200 ohm, ±5%, 1/4 W	01121	CB2015
R53	1-945000-025	Resistor, fixed, composition, 100 ohm, ±10%, 1/4 W	01121	CB1011
R54	1-945000-162	Resistor, fixed, composition, 1 kilohm, ±5%, 1/4 W	01121	CB1025
R55	1-945000-156	Resistor, fixed, composition, 560 ohm, ±5%, 1/4 W	01121	CB5615
R56	1-945000-163	Resistor, fixed, composition, 1.1 kilohm, ±5%, 1/4 W	01121	CB1125
R57	1-945000-143	Resistor, fixed, composition, 160 ohm, ±5%, 1/4 W	01121	CB1615
R58	1-945000-025	Resistor, fixed, composition, 100 ohm, ±10%, 1/4 W	01121	CB1011

Table 8-18. Parts List for AM Modulator and Diode Switch Assembly, A4A5 (Cont.)

Ref. Desig.	Singer Part No.	Description	Mfr. Code No.	Mfr. Part No.
R59	1-945000-131	Resistor, fixed, composition, 51 ohm, ±5%, 1/4 W	01121	CB5105
R60	1-945000-127	Resistor, fixed, composition, 36 ohm, ±5%, 1/4 W	01121	CB3605
R61	1-945000-142	Resistor, fixed, composition, 150 ohm, ±5%, 1/4 W	01121	CB1515
R62	1-945000-142	Resistor, fixed, composition, 150 ohm, ±5%, 1/4 W	01121	CB1515
R63	1-945000-133	Resistor, fixed, composition, 62 ohm, ±5%, 1/4 W	01121	CB6205
R64	1-945000-139	Resistor, fixed, composition, 110 ohm, ±5%, 1/4 W	01121	CB1115
R65	1-945000-139	Resistor, fixed, composition, 110 ohm, ±5%, 1/4 W	01121	CB1115
R66	1-945000-169	Resistor, fixed, composition, 2 kilohm, ±5%, 1/4 W	01121	CB2025
U1	1-926100-001	Integrated circuit, amplifier	27014	LM301AN
U2	1-926100-001	Integrated circuit, op. amp	27014	LM318N
Z1	1-403854-001	AM modulator	88869	

Table 8-19. Parts List for 140 MHz Multiplier Assembly, A4A6

Ref. Desig.	Singer Part No.	Description	Mfr. Code No.	Mfr. Part No.
C1	1-900077-002	Capacitor, fixed, ceramic, 0.01 μF, ±20%, 100 V dc	56289	TG-S10
C2	1-900077-002	Capacitor, fixed, ceramic, 0.01 μF, ±20%, 100 V dc	56289	TG-S10
C3	1-900077-002	Capacitor, fixed, ceramic, 0.01 μF, ±20%, 100 V dc	56289	TG-S10
C4	1-900077-002	Capacitor, fixed, ceramic, 0.01 μF, ±20%, 100 V dc	56289	TG-S10
C5	1-900077-002	Capacitor, fixed, ceramic, 0.01 μF, ±20%, 100 V dc	56289	TG-S10
C6	1-900117-001	Capacitor, variable, ceramic, 2.8 pF to 10 pF, 250 V dc	91293	9312
C7	1-900077-002	Capacitor, fixed, ceramic, 0.01 μF, ±20%, 100 V dc	56289	TG-S10
C8	1-900117-001	Capacitor, variable, ceramic, 2.8 pF to 10 pF, 250 V dc	91293	9312
C9	1-900098-013	Capacitor, fixed, mica, 20 pF, ±5%, 300 V dc	04062	DM5CC200J
C10	1-900098-004	Capacitor, fixed, mica, 4 pF, ±0.5 pF, 300 V dc	04062	DM5CC040D
C11	1-900077-002	Capacitor, fixed, ceramic, 0.01 μF, ±20%, 100 V dc	56289	TG-S10
C12	1-900117-001	Capacitor, variable, ceramic, 2.8 pF to 10 pF, 250 V dc	91293	9312
C13	1-900098-022	Capacitor, fixed, mica, 47 pF, ±5%, 300 V dc	04062	DM5EC4701
C14	1-900098-001	Capacitor, fixed, mica, 1.0 pF, ±0.5 pF, 300 V dc	04062	DM5CC010D
C15	1-900117-001	Capacitor, variable, ceramic, 2.8 pF to 10 pF, 250 V dc	91293	9312
C16	1-900098-027	Capacitor, fixed, mica, 68 pF, ±5%, 300 V dc	04062	DM5EC680J
C17	1-900098-001	Capacitor, fixed, mica, 1.0 pF, ±0.5 pF, 300 V dc	04062	DM5CC010D
C18	1-900117-001	Capacitor, variable, ceramic, 2.8 pF to 10 pF, 250 V dc	91293	9312
C19	1-900098-022	Capacitor, fixed, mica, 47 pF, ±5%, 300 V dc	04062	DM5EC470J
C20	1-103957-001	Capacitor, (wire, buss, 22 gauge)	88869	
C21	1-900077-002	Capacitor, fixed, ceramic, 0.01 μF, ±20%, 100 V dc	56289	TG-S10
C22	1-900077-002	Capacitor, fixed, ceramic, 0.01 μF, ±20%, 100 V dc	56289	TG-S10
C23	1-900117-001	Capacitor, variable, ceramic, 2.8 pF to 10 pF, 250 V dc	91293	9312
C24	1-900098-003	Capacitor, fixed, mica, 3 pF, ±0.5 pF, 300 V dc	04062	DM5CC030D
C25	1-900117-001	Capacitor, variable, ceramic, 2.8 pF to 10 pF, 250 V dc	91293	9312

Table 8-19. Parts List for 140 MHz Multiplier Assembly, A4A6 (Cont.)

Ref. Desig.	Singer Part No.	Description	Mfr. Code No.	Mfr. Part No.
C26	1-900098-009	Capacitor, fixed, mica, 10 pF, ±5%, 300 V dc	04062	DM5CC100J
C27	1-900098-002	Capacitor, fixed, mica, 2 pF, ±0.5%, 300 V dc	04062	DM5CC020D
C28	1-900117-001	Capacitor, variable, ceramic, 2.8 pF to 10 pF, 250 V dc	91293	9312
C29	1-900098-009	Capacitor, fixed, mica, 10 pF, ±5%, 300 V dc	04062	DM5CC100J
J1	1-950031-003	Connector, jack, 3 pins	00779	2-332070-5
J2		Not used		
J3	1-950031-003	Connector, jack, 3 pins	00779	2-332070-5
J4	1-950031-003	Connector, jack, 3 pins	00779	2-332070-5
L1	1-403801-008	Inductor, fixed, 8 turns	88869	
L2	1-403801-006	Inductor, fixed, 6 turns	88869	
L3	1-403801-005	Inductor, fixed, 5 turns	88869	
Q1	1-958000-001	Transistor, silicon, NPN	04713	2N3904-5
Q2	1-958000-001	Transistor, silicon, NPN	04713	2N3904-5
Q3	1-958018-001	Transistor, silicon, NPN	31718	2N5179
Q4	1-958018-001	Transistor, silicon, NPN	31718	2N5179
Q5	1-958018-001	Transistor, silicon, NPN	31718	2N5179
R1	1-945000-025	Resistor, fixed, composition, 100 ohm, ±10%, 1/4 W	01121	CB1011
R2	1-945000-051	Resistor, fixed, composition, 15 kilohm, ±10%, 1/4 W	01121	CB1531
R3	1-945000-048	Resistor, fixed, composition, 8.2 kilohm, ±10%, 1/4 W	01121	CB8221
R4	1-945000-025	Resistor, fixed, composition, 100 ohm, ±10%, 1/4 W	01121	CB1011
R5	1-945000-031	Resistor, fixed, composition, 330 ohm, ±10%, 1/4 W	01121	CB3311
R6	1-945000-032	Resistor, fixed, composition, 390 ohm, ±10%, 1/4 W	01121	CB3911
R7	1-945000-050	Resistor, fixed, composition, 12 kilohm, ±10%, 1/4 W	01121	CB1231
R8	1-945000-049	Resistor, fixed, composition, 10 kilohm, ±10%, 1/4 W	01121	CB1031
R9	1-945000-025	Resistor, fixed, composition, 100 ohm, ±10%, 1/4 W	01121	CB1011
R10	1-945000-031	Resistor, fixed, composition, 330 ohm, ±10%, 1/4 W	01121	CB3311
R11	1-945000-025	Resistor, fixed, composition, 100 ohm, ±10%, 1/4 W	01121	CB1011
R12	1-945000-150	Resistor, fixed, composition, 330 ohm, ±5%, 1/4 W	01121	CB3315

Table 8-19. Parts List for 140 MHz Multiplier Assembly, A4A6 (Cont.)

Ref. Desig.	Singer Part No.	Description	Mfr. Code No.	Mfr. Part No.
R13	1-945000-138	Resistor, fixed, composition, 100 ohm, ±5%, 1/4 W	01121	CB1015
R14	1-945000-027	Resistor, fixed, composition, 150 ohm, ±10%, 1/4 W	01121	CB1511
R15	1-945000-043	Resistor, fixed, composition, 3.3 kilohm, ±10%, 1/4 W	01121	CB3321
R16	1-945000-051	Resistor, fixed, composition, 15 kilohm, ±10%, 1/4 W	01121	CB1531
R17	1-945000-025	Resistor, fixed, composition, 100 ohm, ±10%, 1/4 W	01121	CB1011
R18	1-945000-019	Resistor, fixed, composition, 33 ohm, ±10%, 1/4 W	01121	CB3301
R19		Not used		
R20	1-945000-047	Resistor, fixed, composition, 6.8 kilohm, ±10%, 1/4 W	01121	CB6821
R21	1-945000-022	Resistor, fixed, composition, 56 ohm, ±10%, 1/4 W	01121	CB5601
R22	1-945000-034	Resistor, fixed, composition, 560 ohm, ±10%, 1/4 W	01121	CB5611
R23	1-945000-025	Resistor, fixed, composition, 100 ohm, ±10%, 1/4 W	01121	CB1011
R24	1-945000-015	Resistor, fixed, composition, 15 ohm, ±10%, 1/4 W	01121	CB1501
R25	1-945000-013	Resistor, fixed, composition, 10 ohm, ±10%, 1/4 W	01121	CB1001
R26	1-945000-182	Resistor, fixed, composition, 6.8 kilohm, ±5%, 1/4 W	01121	CB6825
T1	1-403801-006	Autotransformer, tapped, 6 turns	88869	
T2	1-403801-005	Autotransformer, tapped, 5 turns	88869	
T3	1-403801-004	Autotransformer, tapped, 4 turns	88869	
T4	1-403801-004	Autotransformer, tapped, 4 turns	88869	

Table 8-20. Parts List for 80 MHz and 160 MHz Multiplier Assembly, A4A7

Ref. Desig.	Singer Part No.	Description	Mfr. Code No.	Mfr. Part No.
C1	1-900077-002	Capacitor, fixed, ceramic, 0.01μF, ±20%, 100 Vdc	56289	TG-S10
C2	1-900077-002	Capacitor, fixed, ceramic, 0.01μF, ±20%, 100 Vdc	56289	TG-S10
C3	1-900077-002	Capacitor, fixed, ceramic, 0.01μF, ±20%, 100 Vdc	56289	TG-S10
C4	1-900077-002	Capacitor, fixed, ceramic, 0.01μF, ±20%, 100 Vdc	56289	TG-S10
C5	1-900077-002	Capacitor, fixed, ceramic, 0.01μF, ±20%, 100 Vdc	56289	TG-S10
C6	1-900117-001	Capacitor, variable, ceramic, 2.8 pF to 10 pF, 250 Vdc	91293	9312
C7	1-900077-002	Capacitor, fixed, ceramic, 0.01μF, ±20%, 100 Vdc	56289	TG-S10
C8	1-900117-001	Capacitor, variable, ceramic, 2.8 pF to 10 pF, 250 Vdc	91293	9312
C9	1-900098-011	Capacitor, fixed, mica, 15 pF, ±5%, 300 Vdc	04062	DM5 CC150J
C10	1-900098-002	Capacitor, fixed, mica, 2 pF, ±0.5 pF, 300 Vdc	04062	DM5 CC020D
C11	1-900077-002	Capacitor, fixed, ceramic, 0.01μF, ±20%, 100 Vdc	56289	TG-S10
C12	1-900117-001	Capacitor, variable, ceramic, 2.8 pF to 10 pF, 250 Vdc	91293	9312
C13	1-900098-019	Capacitor, fixed, mica, 36 pF, ±5%, 300 Vdc	04062	DM5 EC360J
C14	1-900098-001	Capacitor, fixed, mica, 1.0 pF, ±0.5 pF, 300 Vdc	04062	DM5 CC010D
C15	1-900117-001	Capacitor, variable, ceramic, 2.8 pF to 10 pF, 250 Vdc	91293	9312
C16	1-900098-026	Capacitor, fixed, mica, 62 pF, ±5%, 300 Vdc	04062	DM5 EC620J
C17	1-900098-001	Capacitor, fixed, mica, 1.0 pF, ±0.5 pF, 300 Vdc	04062	DM5 CC010D
C18	1-900117-001	Capacitor, variable, ceramic, 2.8 pF to 10 pF, 250 Vdc	91293	9312
C19	1-900098-025	Capacitor, fixed, mica, 56 pF, ±5%, 300 Vdc	04062	DM5 EC560J
C20	1-900071-114	Capacitor, fixed, mica, 240 pF, ±5%, 500 Vdc	72136	DM10 241J
C21	1-900077-002	Capacitor, fixed, ceramic, 0.01μF, ±20%, 100 Vdc	56289	TG-S10
C22	1-900077-002	Capacitor, fixed, ceramic, 0.01μF, ±20%, 100 Vdc	56289	TG-S10
C23	1-900117-001	Capacitor, variable, ceramic, 2.8 pF to 10 pF, 250 Vdc	91293	9312
C24	1-900098-003	Capacitor, fixed, mica, 3 pF, ±0.5 pF, 300 Vdc	04062	DM5 CC030D

Table 8-20. Parts List for 80 MHz and 160 MHz Multiplier Assembly, A4A7 (Cont.)

Ref. Desig.	Singer Part No.	Description	Mfr. Code No.	Mfr. Part No.
C25	1-900117-001	Capacitor, variable, ceramic, 2.8 pF to 10 pF, 250 Vdc	91293	9312
C26	1-900098-011	Capacitor, fixed, mica, 15 pF, ±5%, 300 Vdc	04062	DM5 CC150J
C27	1-900098-002	Capacitor, fixed, mica, 2 pF, ±0.5 pF, 300 Vdc	04062	DM5 CC020D
C28	1-900117-001	Capacitor, variable, ceramic 2.8 pF to 10 pF, 250 Vdc	91293	9312
C29	1-900098-011	Capacitor, fixed, mica, 15 pF, ±5%, 300 Vdc	04062	DM5 CC150J
J1	1-950031-003	Connector, jack, 3 pins	00779	2-332070-5
J2	1-950031-003	Connector, jack, 3 pins	00779	2-332070-5
J3	1-950031-003	Connector, jack, 3 pins	00779	2-332070-5
J4	1-950031-003	Connector, jack, 1 pin	00779	2-332070-5
J5	1-950031-003	Connector, jack, 1 pin	00779	2-332070-5
L1	1-403801-008	Inductor, fixed, 8 turns	88869	
L2	1-403801-005	Inductor, fixed, 5 turns	88869	
L3	1-403801-004	Inductor, fixed, 4 turns	88869	
Q1	1-958000-001	Transistor, silicon, NPN	04713	2N3904-5
Q2	1-958000-001	Transistor, silicon, NPN	04713	2N3904-5
Q3	1-958018-001	Transistor, silicon, NPN	31718	2N5179
Q4	1-958018-001	Transistor, silicon, NPN	31718	2N5179
Q5	1-958018-001	Transistor, silicon, NPN	31718	2N5179
R1	1-945000-025	Resistor, fixed, composition, 100 ohm, ±10%, 1/4 W	01121	CB1011
R2	1-945000-051	Resistor, fixed, composition, 15 kilohm, ±10%, 1/4 W	01121	CB1531
R3	1-945000-048	Resistor, fixed, composition, 8.2 kilohm, ±10%, 1/4 W	01121	CB8221
R4	1-945000-025	Resistor, fixed, composition, 100 ohm, ±10%, 1/4 W	01121	CB1011
R5	1-945000-031	Resistor, fixed, composition, 330 ohm, ±10%, 1/4 W	01121	CB3311
R6	1-945000-032	Resistor, fixed, composition, 390 ohm, ±10%, 1/4 W	01121	CB3911
R7	1-945000-050	Resistor, fixed, composition, 12 kilohm, ±10%, 1/4 W	01121	CB1231
R8	1-945000-049	Resistor, fixed, composition, 10 kilohm, ±10%, 1/4 W	01121	CB1031
R9	1-945000-025	Resistor, fixed, composition, 100 ohm, ±10%, 1/4 W	01121	CB1011
R10	1-945000-031	Resistor, fixed, composition, 330 ohm, ±10%, 1/4 W	01121	CB3311
R11	1-945000-025	Resistor, fixed, composition, 100 ohm, ±10%, 1/4 W	01121	CB1011

Table 8-20. Parts List for 80 MHz and 160 MHz Multiplier Assembly, A4A7 (Cont.)

Ref. Desig.	Singer Part No.	Description	Mfr. Code No.	Mfr. Part No.
R12	1-945000-150	Resistor, fixed, composition, 330 ohm, ±5%, 1/4 W	01121	CB3315
R13	1-945000-138	Resistor, fixed, composition, 100 ohm, ±5%, 1/4 W	01121	CB1015
R14	1-945000-021	Resistor, fixed, composition, 47 ohm, ±10%, 1/4 W	01121	CB4701
R15	1-945000-043	Resistor, fixed, composition, 3.3 kilohm, ±10%, 1/4 W	01121	CB3321
R16	1-945000-051	Resistor, fixed, composition, 15 kilohm, ±10%, 1/4 W	01121	CB1531
R17	1-945000-025	Resistor, fixed, composition, 100 ohm, ±10%, 1/4 W	01121	CB1011
R18	1-945000-019	Resistor, fixed, composition, 33 ohm, ±10%, 1/4 W	01121	CB3301
R19	1-945160-004	Resistor, variable, cermet, 500 ohm, ±20%, 1/4 W	32997	3352E501
R20	1-945000-047	Resistor, fixed, composition, 6.8 kilohm, ±10%, 1/4 W	01121	CB6821
R21	1-945000-022	Resistor, fixed, composition, 56 ohm, ±10%, 1/4 W	01121	CB5601
R22	1-945000-034	Resistor, fixed, composition, 560 ohm, ±10%, 1/4 W	01121	CB5611
R23	1-945000-025	Resistor, fixed, composition, 100 ohm, ±10%, 1/4 W	01121	CB1011
R24	1-945000-015	Resistor, fixed, composition, 15 ohm, ±10%, 1/4 W	01121	CB1501
R25		Not Used		
R26	1-945000-182	Resistor, fixed, composition, 6.8 kilohm, ±5%, 1/4 W	01121	CB6825
T1	1-403801-005	Autotransformer, tapped, 5 turns	88869	
T2	1-403801-005	Autotransformer, tapped, 5 turns	88869	
T3	1-403801-003	Autotransformer, tapped, 3 turns	88869	
T4	1-403801-003	Autotransformer, tapped, 3 turns	88869	

Table 8-21. Parts List for 90 MHz and 180 MHz Multiplier Assembly, A4A8

Ref. Desig.	Singer Part No.	Description	Mfr. Code No.	Mfr. Part No.
C1	1-900077-002	Capacitor, fixed, ceramic, 0.01μF, ±20%, 100 Vdc	56289	TG-S10
C2	1-900077-002	Capacitor, fixed, ceramic, 0.01μF, ±20%, 100 Vdc	56289	TG-S10
C3	1-900077-002	Capacitor, fixed, ceramic, 0.01μF, ±20%, 100 Vdc	56289	TG-S10
C4	1-900077-002	Capacitor, fixed, ceramic, 0.01μF, ±20%, 100 Vdc	56289	TG-S10
C5	1-900077-002	Capacitor, fixed, ceramic 0.01μF, ±20%, 100 Vdc	56289	TG-S10
C6	1-900117-001	Capacitor, variable, ceramic, 2.8 pF to 10 pF, 250 Vdc	91293	9312
C7	1-900077-002	Capacitor, fixed, ceramic, 0.01μF, ±20%, 100 Vdc	56289	TG-S10
C8	1-900117-001	Capacitor, variable, ceramic, 2.8 pF to 10 pF, 250 Vdc	91293	9312
C9	1-900098-011	Capacitor, fixed, mica, 15 pF, ±5%, 300 Vdc	04062	DM5 CC150J
C10	1-900098-004	Capacitor, fixed, mica, 4 pF, ±0.5 pF, 300 Vdc	04062	DM5 CC040D
C11	1-900077-002	Capacitor, fixed, ceramic, 0.01μF, ±20%, 100 Vdc	56289	TG-S10
C12	1-900117-001	Capacitor, variable, ceramic, 2.8 pF to 10 pF, 250 Vdc	91293	9312
C13	1-900098-011	Capacitor, fixed, mica, 15 pF, ±5%, 300 Vdc	04062	DM5 CC150J
C14	1-900098-001	Capacitor, fixed, mica, 1.0 pF, ±0.5 pF, 300 Vdc	04062	DM5 CC010D
C15	1-900117-001	Capacitor, variable, ceramic, 2.8 pF to 10 pF, 250 Vdc	91293	9312
C16	1-900098-022	Capacitor, fixed, mica, 47 pF, ±5%, 300 Vdc	04062	DM5 EC470J
C17	1-900098-001	Capacitor, fixed, mica, 1.0 pF, ±0.5 pF, 300 Vdc	04062	DM5 CC010D
C18	1-900117-001	Capacitor, variable, ceramic, 2.8 pF to 10 pF, 250 Vdc	91293	9312
C19	1-900098-025	Capacitor, fixed, mica, 56 pF, ±5%, 300 Vdc	04062	DM5 EC560J
C20	1-900071-114	Capacitor, fixed, mica, 240 pF, ±5%, 500 Vdc	72136	DM10 241J
C21	1-900077-002	Capacitor, fixed, ceramic, 0.01μF, ±20%, 100 Vdc	56289	TG-S10
C22	1-900077-002	Capacitor, fixed, ceramic, 0.01μF, ±20%, 100 Vdc	56289	TG-S10
C23	1-900117-001	Capacitor, variable, ceramic, 2.8 pF to 10 pF, 250 Vdc	91293	9312
C24	1-900098-003	Capacitor, fixed, mica, 3 pF, ±0.5 pF, 300 Vdc	04062	DM5 CC030D

Table 8-21. Parts List for 90 MHz and 180 MHz Multiplier Assembly, A4A8 (Cont.)

Ref. Desig.	Singer Part No.	Description	Mfr. Code No.	Mfr. Part No.
C25	1-900117-001	Capacitor, variable, ceramic, 2.8 pF to 10 pF, 250 Vdc	91293	9312
C26	1-900098-009	Capacitor, fixed, mica, 10 pF, ±5%, 300 Vdc	04062	DM5 CC100J
C27	1-900098-002	Capacitor, fixed, mica, 2 pF, ±0.5 pF, 300 Vdc	04062	DM5 CC020D
C28	1-900117-001	Capacitor, variable, ceramic, 2.8 pF to 10 pF, 250 Vdc	91293	9312
C29	1-900098-009	Capacitor, fixed, mica, 10 pF, ±5%, 300 Vdc	04062	DM5 CC100J
J1	1-950031-003	Connector, jack, 3 pins	00779	2-332070-5
J2	1-950031-003	Connector, jack, 3 pins	00779	2-332070-5
J3	1-950031-003	Connector, jack, 3 pins	00779	2-332070-5
J4	1-950031-003	Connector, jack, 1 pin	00779	2-332070-5
J5	1-950031-003	Connector, jack, 1 pin	00779	2-332070-5
L1	1-403801-007	Inductor, fixed, 7 turns	88869	
L2	1-403801-007	Inductor, fixed, 7 turns	88869	
L3	1-403801-004	Inductor, fixed, 4 turns	88869	
Q1	1-958000-001	Transistor, silicon, NPN	04713	2N3904-5
Q2	1-958000-001	Transistor, silicon, NPN	04713	2N3904-5
Q3	1-958018-001	Transistor, silicon, NPN	31718	2N5179
Q4	1-958018-001	Transistor, silicon, NPN	31718	2N5179
Q5	1-958018-001	Transistor, silicon, NPN	31718	2N5179
R1	1-945000-025	Resistor, fixed, composition, 100 ohm, ±10%, 1/4 W	01121	CB1011
R2	1-945000-051	Resistor, fixed, composition, 15 kilohm, ±10%, 1/4 W	01121	CB1531
R3	1-945000-048	Resistor, fixed, composition, 8.2 kilohm, ±10%, 1/4 W	01121	CB8221
R4	1-945000-025	Resistor, fixed, composition, 100 ohm, ±10%, 1/4 W	01121	CB1011
R5	1-945000-031	Resistor, fixed, composition, 330 ohm, ±10%, 1/4 W	01121	CB3311
R6	1-945000-032	Resistor, fixed, composition, 390 ohm, ±10%, 1/4 W	01121	CB3911
R7	1-945000-050	Resistor, fixed, composition, 12 kilohm, ±10%, 1/4 W	01121	CB1231
R8	1-945000-049	Resistor, fixed, composition, 10 kilohm, ±10%, 1/4 W	01121	CB1031
R9	1-945000-025	Resistor, fixed, composition, 100 ohm, ±10%, 1/4 W	01121	CB1011
R10	1-945000-031	Resistor, fixed, composition, 330 ohm, ±10%, 1/4 W	01121	CB3311

Table 8-21. Parts List for 90 MHz and 180 MHz Multiplier Assembly, A4A8 (Cont.)

Ref. Desig.	Singer Part No.	Description	Mfr. Code No.	Mfr. Part No.
R11	1-945000-025	Resistor, fixed, composition, 100 ohm, ±10%, 1/4 W	01121	CB1011
R12	1-945000-150	Resistor, fixed, composition, 330 ohm, ±5%, 1/4 W	01121	CB3315
R13	1-945000-138	Resistor, fixed, composition, 100 ohm, ±5%, 1/4 W	01121	CB1015
R14	1-945000-013	Resistor, fixed, composition, 10 ohm, ±10%, 1/4 W	01121	CB1001
R15	1-945000-043	Resistor, fixed, composition, 3.3 kilohm, ±10%, 1/4 W	01121	CB3321
R16	1-945000-051	Resistor, fixed, composition, 15 kilohm, ±10%, 1/4 W	01121	CB1531
R17	1-945000-025	Resistor, fixed, composition, 100 ohm, ±10%, 1/4 W	01121	CB1011
R18	1-945000-019	Resistor, fixed, composition, 33 ohm, ±10%, 1/4 W	01121	CB3301
R19	1-945160-004	Resistor, variable, cermet, 500 ohm, ±20%, 1/4 W	32997	3352E501
R20	1-945000-047	Resistor, fixed, composition, 6.8 kilohm, ±10%, 1/4 W	01121	CB6821
R21	1-945000-022	Resistor, fixed, composition, 56 ohm, ±10%, 1/4 W	01121	CB5601
R22	1-945000-034	Resistor, fixed, composition, 560 ohm, ±10%, 1/4 W	01121	CB5611
R23	1-945000-025	Resistor, fixed, composition, 100 ohm, ±10%, 1/4 W	01121	CB1011
R24	1-945000-015	Resistor, fixed, composition, 15 ohm, ±10%, 1/4 W	01121	CB1501
R25		Not Used		
R26	1-945000-182	Resistor, fixed, composition, 6.8 kilohm, ±5%, 1/4 W	01121	CB6825
T1	1-403801-004	Autotransformer, tapped, 4 turns	88869	
T2	1-403801-005	Autotransformer, tapped, 5 turns	88869	
T3	1-403801-003	Autotransformer, tapped, 3 turns	88869	
T4	1-403801-003	Autotransformer, tapped, 3 turns	88869	

Table 8-22. Parts List for 200 MHz Multiplier Assembly, A4A9

Ref. Desig.	Singer Part No.	Description	Mfr. Code No.	Mfr. Part No.
C1	1-900077-002	Capacitor, fixed, ceramic, 0.01μF, ±20%, 100 Vdc	56289	TG-S10
C2	1-900077-002	Capacitor, fixed, ceramic, 0.01μF, ±20%, 100 Vdc	56289	TG-S10
C3	1-900077-002	Capacitor, fixed, ceramic, 0.01μF, ±20%, 100 Vdc	56289	TG-S10
C4	1-900077-002	Capacitor, fixed, ceramic, 0.01μF, ±20%, 100 Vdc	56289	TG-S10
C5	1-900077-002	Capacitor, fixed, ceramic, 0.01μF, ±20%, 100 Vdc	56289	TG-S10
C6	1-900117-001	Capacitor, variable, ceramic, 2.8 pF to 10 pF, 250 Vdc	91293	9312
C7	1-900077-002	Capacitor, fixed, ceramic, 0.01μF, ±20%, 100 Vdc	56289	TG-S10
C8	1-900117-001	Capacitor, variable, ceramic, 2.8 pF to 10 pF, 250 Vdc	91293	9312
C9	1-900098-003	Capacitor, fixed, mica, 3 pF, ±0.5 pF, 300 Vdc	04062	DM5CC030D
C10	1-900098-002	Capacitor, fixed, mica, 2 pF, ±0.5 pF, 300 Vdc	04062	DM5 CC020D
C11	1-900077-002	Capacitor, fixed, ceramic, 0.01 μF, ±20%, 100 Vdc	56289	TG-S10
C12	1-900117-001	Capacitor, variable, ceramic 2.8 pF to 10 pF, 250 Vdc	91293	9312
C13	1-900098-005	Capacitor, fixed, mica, 5 pF, ±10%, 300 Vdc	04062	DM5CC050K
C14	1-900098-001	Capacitor, fixed, mica, 1.0 pF, ±0.5 pF, 300 Vdc	04062	DM5 CC010D
C15	1-900117-001	Capacitor, variable, ceramic, 2.8 pF to 10 pF, 250 Vdc	91293	9312
C16	1-900098-016	Capacitor, fixed, mica, 27 pF, ±5%, 300 Vdc	04062	DM5 EC270J
C17	1-900098-001	Capacitor, fixed, mica 1.0 pF, ±0.5 pF, 300 Vdc	04062	DM5 CC010D
C18	1-900117-001	Capacitor, variable, ceramic, 2.8 pF to 10 pF, 250 Vdc	91293	9312
C19	1-900098-016	Capacitor, fixed, mica, 27 pF, ±5%, 300 Vdc	04062	DM5 EC270J
C20	1-103957-001	Capacitor (wire, buss, 22 gauge)	88869	
C21	1-900077-002	Capacitor, fixed, ceramic, 0.01 μF, ±20%, 100 Vdc	56289	TG-S10
C22	1-900077-002	Capacitor, fixed, ceramic, 0.01 μF, ±20%, 100 Vdc	56289	TG-S10
C23	1-900117-001	Capacitor, variable, ceramic, 2.8 pF to 10 pF, 250 Vdc	91293	9312
C24	1-900098-003	Capacitor, fixed, mica, 3 pF, ±0.5 pF, 300 Vdc	04062	DM5 CC030D
C25	1-900117-001	Capacitor, variable, ceramic, 2.8 pF to 10 pF, 250 Vdc	91293	9312

Table 8-22. Parts List for 200 MHz Multiplier Assembly, A4A9 (Cont.)

Ref. Desig.	Singer Part No.	Description	Mfr. Code No.	Mfr. Part No.
C26	1-900098-003	Capacitor, fixed, mica, 3 pF, ±0.5 pF, 300 Vdc	0462	DM5CC030D
C27	1-900098-002	Capacitor, fixed, mica 2 pF, ±0.5 pF, 300 Vdc	0462	DM5 CC020D
C28	1-9000117-001	Capacitor, variable, ceramic, 2.8 pF to 10 pF, 250 Vdc	91293	9312
C29	1-900098-005	Capacitor, fixed, mica, 5 pF, ±10%, 300 Vdc	04062	DM5CC050K
J1	1-950031-003	Connector, jack, 3 pins		2-332070-5
J2		Not used		
J3	1-950031-003	Connector, jack, 3 pins	00779	2-332070-5
J4	1-950031-003	Connector, jack, 1 pin	00779	2-332070-5
L1	1-403801-009	Inductor, fixed, 9 turns	8889	
L2	1-403801-009	Inductor, fixed, 9 turns	88869	
L3	I-403801-005	Inductor, fixed, 5 turns	88869	
Q1	1-958000-001	Transistor, silicon, NPN	04713	2N3904-5
Q2	1-958000-001	Transistor, silicon, NPN	04713	2N3904-5
Q3	1-958018-001	Transistor, silicon, NPN	31718	2N5179
Q4	1-958018-001	Transistor, silicon, NPN	31718	2N5179
Q5	1-958018-001	Transistor, silicon, NPN	31718	2N5179
R1	1-945000-025	Resistor, fixed, composition, 100 ohm, ±10%, 1/4 W	01121	CB1011
R2	1-945000-051	Resistor, fixed, composition, 15 kilohm, ±10%, 1/4 W	01121	CB1531
R3	1-945000-048	Resistor, fixed, composition, 8.2 kilohm, ±10%, 1/4 W	01121	CB8221
R4	1-945000-025	Resistor, fixed, composition, 100 ohm, ±10%, 1/4 W	01121	CB1011
R5	1-945000-031	Resistor, fixed, composition, 330 ohm, ±10%, 1/4 W	01121	CB3311
R6	1-945000-032	Resistor, fixed, composition, 390 ohm, ±10%, 1/4 W	01121	CB3911
R7	1-945000-050	Resistor, fixed, composition, 12 kilohm, ±10%, 1/4 W	01121	CB1231
R8	1-945000-049	Resistor, fixed, composition, 10 kilohm, ±10%, 1/4 W	01121	CB1031
R9	1-945000-025	Resistor, fixed, composition, 100 ohm, ±10%, 1/4 W	01121	CB1011
R10	1-945000-031	Resistor, fixed, composition, 330 ohm, ±10%, 1/4 W	01121	CB3311
R11	1-945000-025	Resistor, fixed, composition, 100 ohm, ±10T, 1/4 W	01121	CB1011
R12	1-945000-150	Resistor, fixed, composition, 330 ohm, ±5%, 1/4 W	01121	CB3315
R13	1-945000-138	Resistor, fixed, composition, 100 ohm, ±5%, 1/4 W	01121	CB1015

Table 8-22. Parts List for 200 MHz Multiplier Assembly, A4A9 (Cont.)

Ref. Desig.	Singer Part No.	Description	Mfr. Code No.	Mfr. Part No.
R14	1-945000-013	Resistor, fixed, composition, 10 ohm, ±10%, 1/4 W	01121	CB1001
R15	1-945000-043	Resistor, fixed, composition, 3.3 kilohm, ±10%, 1/4 W	01121	CB3321
R16	1-945000-051	Resistor, fixed, composition, 15 kilohm, ±10%, 1/4 W	01121	CB1531
R17	1-945000-025	Resistor, fixed, composition, 100 ohm, ±10%, 1/4 W	01121	CB1011
R18	1-945000-019	Resistor, fixed, composition, 33 ohm, ±10%, 1/4 W	01121	CB3301
R19		Not Used		
R20	1-945000-047	Resistor, fixed, composition, 6.8 kilohm, ±10%, 1/4 W	01121	CB6821
R21	1-945000-022	Resistor, fixed, composition, 56 ohm, ±10%, 1/4 W	01121	CB5601
R22	1-945000-034	Resistor, fixed, composition, 560 ohm, ±10%, 1/4 W	01121	CB5611
R23	1-945000-025	Resistor, fixed, composition, 100 ohm, ±10%, 1/4 W	01121	CB1011
R24	1-945000-015	Resistor, fixed, composition, 15 ohm, ±10%, 1/4 W	01121	CB1501
R25	1-945000-013	Resistor, fixed, composition, 10 ohm, ±10%, 1/4 W	01121	CB1001
R26	1-945000-182	Resistor, fixed, composition, 6.8 kilohm, ±5%, 1/4 W	01121	CB6825
T1	1-403801-005	Autotransformer, tapped, 5 turns	88869	
T2	1-403801-004	Autotransformer, tapped, 4 turns	88869	
T3	1-403801-003	Autotransformer, tapped, 3 turns	88869	
T4	1-403801-003	Autotransformer, tapped, 3 turns	88869	

Table 8-23. Parts List for 220 MHz Multiplier Assembly, A4A10

Ref. Desig.	Singer Part No.	Description	Mfr. Code No.	Mfr. Part No.
C1	1-900077-002	Capacitor, fixed, ceramic, 0.01 μF, ±20%, 100 Vdc	56289	TG-S10
C2	1-900077-002	Capacitor, fixed, ceramic, 0.01μF, ±20%, 100 Vdc	56289	TG-S10
C3	1-900077-002	Capacitor, fixed, ceramic, 0.01μF, ±20%, 100 Vdc	56289	TG-S10
C4	1-900077-002	Capacitor, fixed, ceramic, 0.01μF, ±20%, 100 Vdc	56289	TG-S10
C5	1-900077-002	Capacitor, fixed, ceramic, 0.01μF, ±20%, 100 Vdc	56289	TG-S10
C6	1-900117-001	Capacitor, variable, ceramic, 2.8 pF to 10 pF, 250 Vdc	91293	9312
C7	1-900077-002	Capacitor, fixed, ceramic, 0.01μF, ±20%, 100 Vdc	56289	TG-S10
C8	1-900117-001	Capacitor, variable, ceramic, 2.8 pF to 10 pF, 250 Vdc	91293	9312
C9	1-900098-005	Capacitor, fixed, mica, 5 pF, ±10%, 300 V dc	04062	DM5 CC050K
C10	1-900098-002	Capacitor, fixed, mica, 2 pF, ±0.5 pF, 300 Vdc	04062	DM5 CC020D
C11	1-900077-002	Capacitor, fixed, ceramic, 0.01 μF, ±20%, 100 Vdc	56289	TG-S10
C12	1-900117-001	Capacitor, variable, ceramic, 2.8 pF to 10 pF, 250 Vdc	91293	9312
C13	1-900098-007	Capacitor, fixed, mica, 7 pF, ±10%, 300 Vdc	04062	DM5 CC070K
C14	1-900066-013	Capacitor, fixed, ceramic, 0.39 pF, ±10%, 500 Vdc	95121	MC.39 ±10%
C15	1-900117-001	Capacitor, variable, ceramic, 2.8 pF to 10 pF, 250 Vdc	91293	9312
C16	1-900098-011	Capacitor, fixed, mica, 15 pF, ±5%, 300 Vdc	04062	DM5 CC150J
C17	1-900066-013	Capacitor, fixed, ceramic, 0.39 pF, ±10%, 500 Vdc	95121	MC.39±10%
C18	1-900117-001	Capacitor, variable, ceramic, 2.8 pF to 10 pF, 250 Vdc	91293	9312
C19	1-900098-011	Capacitor, fixed, mica, 15 pF, ±5%, 300 Vdc	04062	DM5 CC150J
C20	1-103957-001	Capacitor (wire, buss, 22 gauge)	88869	
C21	1-900077-002	Capacitor, fixed, ceramic, 0.01μF, ±20%, 100 Vdc	56289	TG-S10
C22	1-900077-002	Capacitor, fixed, ceramic, 0.01μF, ±20%, 100 Vdc	56289	TG-S10
C23	1-900117-001	Capacitor, variable, ceramic, 2.8 pF to 10 pF, 250 Vdc	91293	9312
C24	1-900098-001	Capacitor, fixed, mica, 1.0 pF, ±0.5 pF, 300 V	04062	DM5 CC010D
C25	1-900117-001	Capacitor, variable, ceramic, 2.8 pF to 10 pF, 250 Vdc	91293	9312
C26		Not Assigned		

Table 8-23. Parts List for 220 MHz Multiplier Assembly, A4A10 (Cont.)

Ref. Desig.	Singer Part No.	Description	Mfr. Code No.	Mfr. Part No.
C27	1-90098-001	Capacitor, fixed, mica 1.0 pF, ±0.5 pF, 300 Vdc	04062	DM5 CC010D
C28	1-900117-001	Capacitor, variable, ceramic, 2.8 pF to 10 pF, 250 Vdc	91293	9312
C29	1-900098-004	Capacitor, fixed, mica, 4 pF, ±0.5 pF, 300 Vdc	04062	DM5 CC0401
J1	1-950031-003	Connector, jack, 3 pins	00779	2-332070-5
J2		Not used		
J3	1-950031-003	Connector, jack, 3 pins	00779	2-332070-5
J4	1-950031-003	Connector, jack, 1 pin	00779	2-332070-5
L1	1-403801-008	Inductor, fixed, 8 turns	88869	
L2	1-403801-007	Inductor, fixed, 7 turns	88869	
L3	1-403801-006	Inductor, fixed, 6 turns	88869	
Q1	1-958000-001	Transistor, silicon, NPN	04713	2N3904-5
Q2	1-958000-001	Transistor, silicon, NPN	04713	2N3904-5
Q3	1-958018-001	Transistor, silicon, NPN	31718	2N5179
Q4	1-958018-001	Transistor, silicon, NPN	31718	2N5179
Q5	1-958018-001	Transistor, silicon, NPN	31718	2N5179
R1	1-945000-025	Resistor, fixed, composition, 100 ohm,±10%, 1/4 W	01121	CB1011
R2	1-945000-051	Resistor, fixed, composition, 15 kilohm, ±10%, 1/4 W	01121	CB1531
R3	1-945000-048	Resistor, fixed, composition, 8.2 kilohm, ±10%, 1/4 W	01121	CB8221
R4	1-945000-025	Resistor, fixed, composition, 100 ohm, ±10%, 1/4 W	01121	CB1011
R5	1-945000-031	Resistor, fixed, composition, 330 ohm, ±10%, 1/4 W	01121	CB3311
R6	1-945000-032	Resistor, fixed, composition, 390 ohm, ±10%, 1/4 W	01121	CB3911
R7	1-945000-050	Resistor, fixed, composition, 12 kilohm, ±10%, 1/4 W	01121	CB1231
R8	1-945000-049	Resistor, fixed, composition, 10 kilohm, ±10%, 1/4 W	01121	CB1031
R9	1-945000-025	Resistor, fixed, composition, 100 ohm, ±10%, 1/4 W	01121	CB1011
R10	1-945000-031	Resistor, fixed, composition, 330 ohm, ±10%, 1/4 W	01121	CB3311
R11	1-945000-025	Resistor, fixed, composition, 100 ohm, ±10%, 1/4 W	01121	CB1011
R12	1-945000-150	Resistor, fixed, composition, 330 ohm, ±5%, 1/4 W	01121	CB3315
R13	1-945000-138	Resistor, fixed, composition, 100 ohm, ±5%, 1/4 W	01121	CB1015
R14	1-945000-013	Resistor, fixed, composition, 10 ohm, ±10%, 1/4 W	01121	CB1001

Table 8-23. Parts List for 220 MHz Multiplier Assembly, A4A10 (Cont.)

Ref. Desig.	Singer Part No.	Description	Mfr. Code No.	Mfr. Part No.
R15	1-945000-043	Resistor, fixed, composition, 3.3 kilohm, ±10%, 1/4 W	01121	CB3321
R16	1-945000-051	Resistor, fixed, composition, 15 kilohm, ±10%, 1/4 W	01121	CB1531
R17	1-945000-025	Resistor, fixed, composition, 100 ohm, ±10%, 1/4 W	01121	CB1011
R18	1-945000-019	Resistor, fixed, composition, 33 ohm, ±10%, 1/4 W	01121	CB3301
R19		Not Used		
R20	1-945000-047	Resistor, fixed, composition, 6.8 kilohm, ±10%, 1/4 W	01121	CB6821
R21	1-945000-022	Resistor, fixed, composition, 56 ohm, ±10%, 1/4 W	01121	CB5601
R22	1-945000-034	Resistor, fixed, composition, 560 ohm, ±10%, 1/4 W	01121	CB5611
R23	1-945000-025	Resistor, fixed, composition, 100 ohm, ±10%, 1/4 W	01121	CB1011
R24	1-945000-015	Resistor, fixed, composition, 15 ohm, ±10%, 1/4 W	01121	CB1501
R25	1-945000-013	Resistor, fixed, composition, 10 ohm, ±10%, 1/4 W	01121	CB1001
R26	1-945000-182	Resistor, fixed, composition, 6.8 kilohm, ±5%, 1/4 W	01121	CB6825
T1	1-403801-006	Autotransformer, tapped, 6 turns	88869	
T2	1-403801-003	Autotransformer, tapped, 3 turns	88869	
T3	1-403801-003	Autotransformer, tapped, 3 turns	88869	
T4	1-403801-003	Autotransformer, tapped, 3 turns	88869	

Table 8-24. Parts List for Gain Control Amplifier Assembly, A4A11

Ref. Desig.	Singer Part No.	Description	Mfr. Code No.	Mfr. Part No.
C1	1-900117-001	Capacitor, variable, ceramic, 2.8 pF to 10 pF, 250 Vdc	91293	9312
C2	1-900117-001	Capacitor, variable, ceramic, 2.8 pF to 10 pF, 250 Vdc	91293	9312
C3	1-900117-001	Capacitor, variable, ceramic, 2.8 pF to 10 pF, 250 Vdc	91293	9312
C4	1-900117-001	Capacitor, variable, ceramic, 2.8 pF to 10 pF, 250 Vdc	91293	9312
C5	1-900063-002	Capacitor, variable, glass, 1.0 pF to 10 pF, 500 Vdc	0000A	GSG083
C6	1-900063-002	Capacitor, variable, glass, 1.0 pF to 10 pF, 500 Vdc	0000A	GSG083
C7	1-900063-002	Capacitor, variable, glass, 1.0 pF to 10 pF, 500 Vdc	0000A	GSG083
C8	1-900045-001	Capacitor, fixed, feed-thru, 470 pF, ±20%, 500 Vdc	33095	FA5C-4712
C9	1-900045-001	Capacitor, fixed, feed-thru, 470 pF, ±20%, 500 Vdc	33095	FA5C-4712
C10	1-900045-001	Capacitor, fixed, feed-thru, 470 pF, ±20%, 500 Vdc	33095	FA5C-4712
C11	1-900045-001	Capacitor, fixed, feed-thru, 470 pF, ±20%, 500 Vdc	33095	FA5C-4712
C12	1-900045-001	Capacitor, fixed, feed-thru, 470 pF, ±20%, 500 Vdc	33095	FA5C-4712
C13	1-900045-001	Capacitor, fixed, feed-thru, 470 pF, ±20%, 500 Vdc	33095	FA5C-4712
C14	1-900117-001	Capacitor, variable, ceramic, 2.8 pF to 10 pF, 250 Vdc	91293	9312
C15	1-900117-001	Capacitor, variable, ceramic, 2.8 pF to 10 pF, 250 Vdc	91293	9312
C16		Not used		
C17	1-900066-023	Capacitor, fixed, ceramic, 1.0 pF, ±10%, 500 Vdc	95121	MC-1.0 ±10%
C18	1-900115-006	Capacitor, fixed, tantalum, 22 μF, ±20%, 15 Vdc	12954	D22GS1D15M
C19	1-900115-006	Capacitor, fixed, tantalum, 22 μF, ±20%, 15 Vdc	12954	D22GS1D15M
C20	1-900115-006	Capacitor, fixed, tantalum, 22 μF, ±20%, 15 Vdc	12954	D22GS1D15M
J1	1-950031-003	Connector, jack, 3 pins	00779	2-332070-5
J2	1-950031-003	Connector, jack, 1 pin	00779	2-332070-5
J3		Not used		
J4	1-950031-003	Connector, jack, 1 pin	00779	2-332070-5
J5	1-950031-003	Connector, jack, 3 pins	0079	2-332070-5
L1	1-403811-001	Inductor, fixed, 1 turn	88869	
L2	1-403812-001	Inductor, fixed, 1 turn	88869	

Table 8-24. Parts List for Gain Control Amplifier Assembly, A4A11 (Cont.)

Ref. Desig.	Singer Part No.	Description	Mfr. Code No.	Mfr. Part No.
L3	1-403811-001	Inductor, fixed, 1 turn	88869	
L4	1-403812-001	Inductor, fixed, 1 turn	88869	
L5	1-403811-001	Inductor, fixed, 1 turn	88869	
L6	1-403813-001	Inductor, fixed 1 turn	88869	
L7	1-403923-001	Inductor, fixed, 1 turn	88869	
Q1	1-958101-001	Transistor, silicon, NPN	04713	2N6304
Q2	1-958101-001	Transistor, silicon, NPN	04713	2N6304
Q3	1-958101-001	Transistor, silicon, NPN	04713	2N6304
R1	1-945000-033	Resistor, fixed, composition, 470 ohm, ±10%, 1/4 W	01121	CB4711
R2	1-945000-033	Resistor, fixed, composition, 470 ohm, ±10%, 1/4 W	01121	CB4711
R3	1-945000-033	Resistor, fixed, composition, 470 ohm, ±10%, 1/4 W	01121	CB4711
R4	1-945000-033	Resistor, fixed, composition, 470 ohm, ±10%, 1/4 W	01121	CB4711
R5	1-945000-033	Resistor, fixed, composition, 470 ohm, ±10%, 1/4 W	01121	CB4711
R6	1-945000-030	Resistor, fixed, composition, 270 ohm, ±10%, 1/4 W	01121	CB2711
R7	1-945000-048	Resistor, fixed, composition, 8.2 kilohm, ±10%, 1/4 W	01121	CB8221
R8	1-945000-056	Resistor, fixed, composition, 39 kilohm, ±10%, 1/4 W	01121	CB3931
R9	1-945000-048	Resistor, fixed, composition, 8.2 kilohm, ±10%, 1/4 W	01121	CB8221
R10	1-945000-055	Resistor, fixed, composition, 33 kilohm, ±10%, 1/4 W	01121	CB3331
R11	1-945000-048	Resistor, fixed, composition, 8.2 kilohm, ±10%, 1/4 W	01121	CB8221
R12	1-945000-054	Resistor, fixed, composition, 27 kilohm, ±10%, 1/4 W	01121	CB2731
R13	1-945000-149	Resistor, fixed, composition, 300 ohm, ±5%, 1/4 W	01121	CB3015
R14	1-945000-120	Resistor, fixed, composition, 18 ohm, ±5%, 1/4 W	01121	CB1805
R15	1-945000-149	Resistor, fixed, composition, 300 ohm, ±5%, 1/4 W	01121	CB3015
R16	1-945000-107	Resistor, fixed, composition, 5.1 ohm, ±5%, 1/4 W	01121	CB5R15

Table 8-25. Parts List for Interconnect Assembly, A5

Ref. Desig.	Singer Part No.	Description	Mfr. Code No.	Mfr. Part No.
A5A1	4-005026-007	Assembly, 100 MHz Multiplier	88869	
A5A2	4-005047-001	Assembly, Input Diode Switch	88869	
A5A3	4-005029-006	Assembly, 0.8 GHz Multiplier	88869	
A5A4	4-005029-005	Assembly, 0.9 GHz Multiplier	88869	
A5A5	4-005029-004	Assembly, 1.0 GHz Multiplier	88869	
A5A6	4-005029-003	Assembly, 1.1 GHz Multiplier	88869	
A5A7	4-005029-002	Assembly, 1.2 GHz Multiplier	88869	
A5A8	4-005029-001	Assembly, 1.3 GHz Multiplier	88869	
A5A9	4-005042-001	Assembly, Output Diode Switch	88869	
A5A10	4-005189-001	Assembly, Final Broadband Amplifier	88869	
J1	1-403946-001	Connector, jack, 14 pins	88869	
J2	556-205-001	Connector, jack, SMB	98291	51-051-000
J3	556-205-001	Connector, jack, SMB	98291	51-051-000
J4	556-205-001	Connector, jack, SMB	98291	51-051-000
J5	556-205-001	Connector, jack, SMB	98291	51-051-000
J6	556-205-001	Connector, jack, SMB	98291	51-051-000
J7	556-205-001	Connector, jack, SMB	98191	51-051-000
J8		Not used		
J9	556-205-001	Connector, jack, SMB	98291	51-051-000
J10	556-205-001	Connector, jack, SMB	98291	51-051-000
W1	2-202588-001	Cable assembly, semi-rigid coax, 3.3 in., SMB to SMB	88869	
W2	2-202589-001	Cable assembly, semi-rigid coax, 3.3 in., SMB at one end	88869	
W3	2-202590-001	Cable assembly, semi-rigid coax, 3.7 in., SMB at one end	88869	
W4	2-202591-001	Cable assembly, semi-rigid coax, 5.3 in.	88869	
W5	2-202592-001	Cable assembly, semi-rigid coax, 7.9 in.	88869	
W6	2-202593-001	Cable assembly, semi-rigid coax, 4.8 in.	88869	
W7	2-202594-001	Cable assembly, semi-rigid coax, 6.5 in.	88869	
W8	2-202595-001	Cable assembly, semi-rigid coax, 3 in.	88869	
W9	2-202596-001	Cable assembly, semi-rigid coax, 2.1 in.	88869	
W10	2-202597-001	Cable assembly, semi-rigid coax, 10.9 in.	88869	
W11	2-202598-001	Cable assembly, semi-rigid coax, 11.3 in.	88869	
W12	2-202599-001	Cable assembly, semi-rigid coax, 4.8 in.	88869	
W13	2-202600-001	Cable assembly, semi-rigid coax, 3 in.	88869	
W14	2-202601-001	Cable assembly, semi-rigid coax, 9 in.	88869	
W15	2-202602-001	Cable assembly, semi-rigid coax, 7.1 in.	88869	
W16	2-202603-001	Cable assembly, semi-rigid coax, 5.1 in.	88869	
W17	2-202604-001	Cable assembly, semi-rigid coax, 2.1 in.	88869	
W18	2-202605-001	Cable assembly, semi-rigid coax, 5.8 in.	88869	

Table 8-25. Parts List for Interconnect Assembly, A5 (Cont.)

Ref. Desig.	Singer Part No.	Description	Mfr. Code No.	Mfr. Part No.
W19		Not used		
XA5A1J1	1-403946-001	Connector, jack, 5 pins	88869	
XA5A1J2	1-403946-001	Connector, jack, 5 pins	88869	
XA5A1J3		Not used		
XA5A1J4		Connector, jack, consisting of:		
	1-900079-003	Capacitor, fixed, feed-thru, 470 pF, +100% -0%, 300 Vdc	01121	FW5N-471P
	1-910301-001	Connector, contact, 1 pin	00779	86090-3
XA5A2J1	1-403946-001	Connector, jack, 5 pins	88869	
XA5A1J2		Connector, jack, consisting of:		
	1-900079-003	Capacitor, fixed, feed-thru, 470 pF +100% -0%, 300 Vdc	01121	FW5N-471P
	1-910301-001	Connector, contact, 1 pin	00779	86090-3
XA5A2J3	1-403946-001	Connector, jack, 5 pins	88869	
XA5A2J4		Connector, jack, 5 pins		
	1-900079-003	Capacitor, fixed, feed-thru, 470 pF, +100% -0%, 300 Vdc	01121	FW5N-471P
	1-910301-001	Connector, contact, 1 pin	00779	860903
XA5A2J5	1-403946-001	Connector, jack, 5 pin	88869	
XA5A2J6		Connector, jack, consisting of:		
	1-900079-003	Capacitor, fixed, feed-thru, 470 pF, +100%, -0%, 300 Vdc	01121	FW5N-471P
	1-910301-001	Connector, contact, 1 pin	00779	86090-3
XA5A2J7	1-403946-001	Connector, jack, 5 pins	88869	
XA5A2J8		Connector, jack, consisting of:		
	1-900079-003	Capacitor, fixed, feed-thru, 470 pF, +100% -0%, 300 Vdc	01121	FW5N-471P
	1-910301-001	Connector, contact, pin	00779	86090-3
XA5A2J9	1-403946-001	Connector, jack, 5 pins	88869	
XA5A2J10		Connector, jack, consisting of:		
	1-900079-003	Capacitor, fixed, feed-thru, 470 pF, +100% -0%, 300 Vdc	01121	FW5N-471P
	1-910301-001	Connector, contact, 1 pin	00779	86090-3
XA5A2J11	1-403946-001	Connector, jack, 5 pins	88869	
XA5A2J12		Connector, jack, consisting of:		
	1-900079-003	Capacitor, fixed, feed-thru, 470 pF, +100% -0%, 300 Vdc	01121	FW5N-471P
	1-910301-001	Connector, contact, 1 pin	00779	86090-3
XA5A2J13	1-403946-001	Connector, jack, 5 pins	88869	
XA5A3J1	1-403946-001	Connector, jack, 5 pins	88869	
XA5A3J2		Connector, jack, consisting of:		
	1-900079-003	Capacitor, fixed, feed-thru, 470 pF, +100% -0%, 300 Vdc	01121	FW5N-471P

Table 8-25. Parts List for Interconnect Assembly, A5 (Cont.)

Ref. Desig.	Singer Part No.	Description	Mfr. Code No.	Mfr. Part No.
	1-910301-001	Connector, contact, 1 pin	00779	86090-3
XA5A3J3	1-403946-001	Connector, jack, 5 pins	88869	
XA5A4J1	1-403946-001	Connector, jack, 5 pins	88869	
XA5A4J2		Connector, jack, consisting of:		
	1-900079-003	Capacitor, fixed, feed-thru, 470 pF, +100% -0%, 300 Vdc	01121	FW5N-471P
	1-910301-001	Connector, contact, 1 pin	00779	86090-3
XA5A4J3	1-403946-001	Connector, jack, 5 pins	88869	
XA5A5J1	1-403946-001	Connector, jack, 5 pins	88869	
XA5A5J2		Connector, jack, consisting of:		
	1-900079-003	Capacitor, fixed, feed-thru, 470 pF,+100% -0%, 300 Vdc	01121	FW5N-471P
	1-910301-001	Connector, contact, 1 pin	00779	86090-3
XA5A5J3	1-403946-001	Connector, jack, 5 pin	88869	
XA5A6J1	1-403946-001	Connector, jack, 5 pins	88869	
XA5A6J2		Connector, jack, consisting of:		
	1-900079-003	Capacitor, fixed, feed-thru, 470 pF, +100% -0%, 300 VD	01121	FW5N-471P
	1-910301-001	Connector, contact, 1 pin	00779	86090-3
XA5A6J3	1-403946-001	Connector, jack, 5 pins	88869	
XA5A7J1	1-403946-001	Connector, jack, 5 pins	88869	
XA5A7J2		Connector, jack, consisting of:		
	1-900079-003	Capacitor, fixed, feed-thru, 470 pF, +100% -0%, 300 Vdc	01121	FW5N-471P
	1-910301-001	Connector, contact, 1 pin	00779	86090-3
XA5A7J3	1-403946-001	Connector, jack, 5 pins	88869	
XA5A8J1	1-403946-001	Connector, jack, 5 pins	88869	
XA5A8J2		Connector, jack, consisting of:		
	1-900079-001	Capacitor, fixed, feed-thru, 470 pF, +100% -0%, 300 Vdc	01121	FW5N-471P
	1-910301-001	Connector, contact, 1 pin	00779	86090-3
XA5A8J3	1-403946-001	Connector, jack, 5 pins	88869	
XA5A9J1		Connector, jack, consisting of:		
	1-900079-003	Capacitor, fixed, feed-thru, 470 pF, +100% -0%, 300 Vdc	01121	FW5N-471P
	1-910301-001	Connector, contact, 1 pin	00779	86090-3
XA5A9J2		Connector, jack, consisting of:		
	1-900079-003	Capacitor, fixed, feed-thru, 470 pF, +100% -0%, 300 Vdc	01121	FW5N-471P
	1-910301-001	Connector, contact, 1 pin	00779	86090-3
XA5A9J3	1-403946-001	Connector, jack, 5 pins	88869	
XA5A9J4		Connector, jack, consisting of:		
	1-900079-003	Capacitor, fixed, feed-thru, 470 pF, +100% -0%, 300 Vdc	01121	FW5N-471P

Table 8-25. Parts List for Interconnect Assembly, A5 (Cont.)

Ref. Desig.	Singer Part No.	Description	Mfr. Code No.	Mfr. Part No.
	1-910301-001	Connector, contact, 1 pin	00779	86090-3
XA5A9J5	1-403946-001	Connector, jack, 5 pins	88869	
XA5A9J6		Connector, jack, consisting of		
	1-900079-003	Capacitor, fixed, feed-thru, 470 pF, +100% -0%, 300 Vdc	01121	FW5N-471P
	1-910301-001	Connector, contact, 1 pin	00779	86090-3
XA5A9J7	1-403946-001	Connector, jack, 5 pins	88869	
XA5A9J8		Connector, jack, consisting of:		
	1-900079-003	Capacitor, fixed, feed-thru, 470 pF, +100% -0%, 300 Vdc	01121	FW5N-471P
	1-910301-001	Connector, contact, 1 pin	00779	86090-3
XA5A9J9	1-403946-001	Connector, jack, 5 pins	88869	
XA5A9J10		Connector, jack, consisting of:		
	1-900079-003	Capacitor, fixed, feed-thru, 470 pF, +100% -0%, 300 Vdc	01121	FW5N-471P
	1-910301-001	Connector, contact, 1 pin	00779	86090-3
XA5A9J11	1-403946-001	Connector, jack, 5 pins	88869	
XA5A9J12		Connector, jack, consisting of:		
	1-900079-003	Capacitor, fixed, feed-thru, 470 pF, +100% -0%, 300 Vdc	01121	FW5N-471P
	1-910301-001	Connector, contact, 1 pin	00779	86090-3
XA5A9J13	1-403946-001	Connector, jack, 5 pins	88869	
XA5A9J14		Connector, jack, consisting of:		
	1-900079-003	Capacitor, fixed, feed-thru, 470 pF, +100% -0%, 300 Vdc	01121	FW5N-471P
	1-910301-001	Connector, contact, 1 pin	00779	86090-3
XA5A9J15		Connector, jack, consisting of:		
	1-900079-003	Capacitor, fixed, feed-thru, 470 pF, +100% -0%, 300 Vdc	01121	FW5N-471P
	1-910301-001	Connector, contact, 1 pin	00779	86090-3
XA5A9J16		Connector, jack, consisting of:		
	1-900079-003	Capacitor, fixed, feed-thru, 470 pF, +100% -0%, 300 Vdc	01121	FW5N-471P
	1-910301-001	Connector, contact, 1 pin	00779	86090-3
XA5A9J17		Connector, jack, consisting of:		
	1-900079-003	Capacitor, fixed, feed-thru, 470 pF, +100% -0%, 300 Vdc	01121	FW5N-471P
	1-910301-001	Connector, contact, 1 pin	00779	86090-3
XA5A9J18		Connector, jack, consisting of:		
	1-900079-003	Capacitor, fixed, feed-thru, 470 pF, +100% -0%, 300 Vdc	01121	FW5N-471P
	1-910301-001	Connector, contact, 1 pin	00779	86090-3
XA5A9J19		Connector, jack, consisting of:		
	1-900079-003	Capacitor, fixed, feed-thru, 470 pF, +100% -0%, 300 Vdc	01121	FW5N-471P

Table 8-25. Parts List for Interconnect Assembly, A5 (Cont.)

Ref. Desig.	Singer Part No.	Description	Mfr. Code No.	Mfr. Part No.
	1-910301-001	Connector, contact, 1 pin	00779	86090-3
XA5A9J20	1-403946-001	Connector, contact, 5 pins	88869	
XA5A10J1		Connector, jack, consisting of:		
	1-900079-003	Capacitor, fixed, feed-thru, 470 pF, +100% -0%, 300 Vdc	01121	FW5N-471P
	1-910301-001	Connector, contact, 1 pin	00779	86090-3
XA5A10J2	1-403946-001	Connector, jack, 5 pins	88869	
XA5A10J3		Connector, jack, consisting of:		
	1-900079-003	Capacitor, fixed, feed-thru, 470 pF, +100% -0%, 300 Vdc	01121	FW5N-471P
	1-910301-001	Connector, contact, 1 pin	00779	86090-3
XA5A10J4	1-403946-001	Connector, jack, 5 pins	88869	
XA5A10J5	1-403946-001	Connector, jack, 5 pins	88869	
XA5A10J6		Connector, jack, consisting of:		
	1-900079-003	Capacitor, fixed, feed-thru. 470 pF, +100% -0%, 300 Vdc	01121	FW5N-471P
	1-910301-001	Connector, contact, 1 pin	00779	86090-3
XA5A10J7		Connector, jack, consisting of:		
	1-900079-003	Capacitor, fixed, feed-thru, 470 pF, +100% -0%, 300 Vdc	01121	FW5N-471P
	1-910301-001	Connector, contact, 1 pin	00779	86090-3
XA5A10J8		Connector, jack, consisting of:		
	1-900079-003	Capacitor, fixed, feed-thru, 470 pF, +100% -0%, 300 Vdc	01121	FW5N-471P
	1-910301-001	Connector, contact, 1 pin	00779	86090-3
XA5A10J9		Connector, jack, consisting of:		
	1-900079-003	Capacitor, fixed, feed-thru, 470 pF, +100% -0%, 300 Vdc	01121	FW5N-471P
	1-910301-001	Connector, contact, 1 pin	00779	86090-3
XA5A11J1		Connector, jack, consisting of:		
	1-900079-003	Capacitor, fixed, feed-thru, 470 pF, +100% -0%, 300 Vdc	01121	FW5N-471P
	1-910301-001	Connector, contact, 1 pin	00779	86090-3
J2	1-403946-001	Connector, jack, 5 pins	88869	
J3	1-403946-001	Connector, jack, 5 pins	88869	
J4	1-403946-001	Connector, jack, 5 pins	88869	
XZ1-R		Part of W1		
XZ1-X		Part of W3		
XZ1-L		Part of W2		
Z1	1-403853-001	Mixer, doubly balanced	88869	

Table 8-26. Parts List for 100 MHz Multiplier Assembly, A5A1

Ref. Desig.	Singer Part No.	Description	Mfr. Code No.	Mfr. Part No.
C1	1-900077-002	Capacitor, fixed, ceramic, 0.01μF, ±20%, 100 Vdc	56289	TG-S10
C2	1-900077-002	Capacitor, fixed, ceramic, 0.01μF, ±20%, 100 Vdc	56289	TG-S10
C3	1-900077-002	Capacitor, fixed, ceramic, 0.01μF, ±20%, 100 Vdc	56289	TG-S10
C4	1-900077-002	Capacitor, fixed, ceramic, 0.01μF, ±20%, 100 Vdc	56289	TG-S10
C5	1-900077-002	Capacitor, fixed, ceramic, 0.01μF, ±20%, 100 Vdc	56289	TG-S10
C6	1-900117-001	Capacitor, variable, ceramic, 2.8 pF to 10 pF, 250 Vdc	91293	9312
C7	1-900077-002	Capacitor, fixed, ceramic, 0.01μF, ±20%, 100 Vdc	56289	TG-S10
C8	1-900117-001	Capacitor, variable, ceramic, 2.8 pF to 10 pF, 250 Vdc	91293	9312
C9	1-900098-013	Capacitor, fixed, mica, 20 pF, ±5%, 300 Vdc	04062	DM5 CC200J
C10	1-900066-140	Capacitor, fixed, ceramic, 5.6 pF, ±5%, 500 Vdc	95121	MC5.6 ±5%
C11	1-900077-002	Capacitor, fixed, ceramic, 0.01 μF, ±20%, 100 Vdc	56289	TG-S10
C12	1-900117-001	Capacitor, variable, ceramic, 2.8 pF to 10 pF, 250 Vdc	91293	9312
C13	1-900098-013	Capacitor, fixed, mica, 20 pF, ±5%, 300 Vdc	04061	DM5 CC200J
C14	1-900066-120	Capacitor, fixed, ceramic, 0.75 pF, ±5%, 500 Vdc	95121	MC0.75 ±5%
C15	1-900117-001	Capacitor, variable, ceramic, 2.8 pF to 10 pF, 250 Vdc	91293	9312
C16	1-900098-016	Capacitor, fixed, mica, 27 pF, ±5%, 300 Vdc	04062	DM5 EC270J
C17	1-900066-120	Capacitor, fixed, ceramic, 0.75 pF, ±5%, 500 Vdc	95121	MC0.75 ±5%
C18	1-900117-001	Capacitor, variable, ceramic, 2.8 pF to 10 pF, 250 Vdc	91293	9312
C19	1-900098-17	Capacitor, fixed, mica, 30 pF, ±5%, 300 Vdc	04062	DM5 EC300J
C20	1-900071-114	Capacitor, fixed, mica, 240 pF, ±5%, 500 Vdc	72136	DM10241J
J1	1-950031-003	Connector, jack, 3 pins	00779	2-332070-5
J2	I-950031-003	Connector, jack, 3 pins	00779	2-332070-5
J3		Not used		
J4	1-950031-003	Connector, jack, 1 pin	00779	2-332070-5
L1	1-403801-005	Inductor, fixed, 5 turns	88869	
L2	1-403801-005	Inductor, fixed, 5 turns	88869	
L3	1-403801-005	Inductor, fixed, 5 turns	88869	

Table 8-26. Parts List for 100 MHz Multiplier Assembly, A5A1 (Cont.)

Ref. Desig.	Singer Part No.	Description	Mfr. Code No.	Mfr. Part No.
L4	1-403801-005	Inductor, fixed, 5 turns	88869	
Q1	1-958000-001	Transistor, silicon, NPN	04713	2N3904-5
Q2	1-958000-001	Transistor, silicon, NPN	04713	2N3904-5
Q3	1-958018-001	Transistor, silicon, NPN	31718	2N5179
Q4	1-958018-001	Transistor, silicon, NPN	31718	2N5179
R1	1-945000-025	Resistor, fixed, composition, 100 ohm, ±10%, 1/4 W	01121	CB1011
R2	1-945000-051	Resistor, fixed, composition, 15 kilohm, ±10%, 1/4 W	01121	CB1531
R3	1-945000-048	Resistor, fixed, composition, 8.2 kilohm, ±10%, 1/4 W	01121	CB8221
R4	1-945000-025	Resistor, fixed, composition, 100 ohm, ±10%, 1/4 W	01121	CB1011
R5	1-945000-031	Resistor, fixed, composition, 330 ohm, ±10%, 1/4 W	01121	CB3311
R6	1-945000-032	Resistor, fixed, composition, 390 ohm, ±10%, 1/4 W	01121	CB3911
R7	1-945000-050	Resistor, fixed, composition, 12 kilohm, ±10%, 1/4 W	01121	CB1231
R8	1-945000-049	Resistor, fixed, composition, 10 kilohm, ±10%, 1/4 W	01121	CB1031
R9	1-945000-025	Resistor, fixed composition, 100 ohm, ±10%, 1/4 W	01121	CB1011
R10	1-945000-031	Resistor, fixed, composition, 330 ohm, ±10%, 1/4 W	01121	CB3311
R11	1-945000-025	Resistor, fixed, composition, 100 ohm, ±10%, 1/4 W	01121	CB1011
R12	1-945000-150	Resistor, fixed, composition, 330 ohm, ±5%, 1/4 W	01121	CB3315
R13	1-945000-138	Resistor, fixed, composition 100 ohm, ±5%, 1/4 W	01121	CB1015
R14	1-945000-013	Resistor, fixed, composition, 10 ohm, ±10%, 1/4 W	01121	CB1001
R15	1-945000-043	Resistor, fixed, composition, 3.3 kilohm, ±10%, 1/4 W	01121	CB3321
R16	1-945000-051	Resistor, fixed, composition, 15 kilohm, ±10%, 1/4 W	01121	CB1531
R17	1-945000-025	Resistor, fixed, composition, 100 ohm, ±10%, 1/4 W	01121	CB1011
R18	1-945000-019	Resistor, fixed, composition, 33 ohm, ±10%, 1/4 W	01121	CB3301
R19	1-945160-004	Resistor, variable, cermet, 500 ohm, ±20%, 1/4 W	32997	3352E501
R20		Not Used		
R21		Not Used		
R22		Not Used		
R23		Not Used		

Table 8-26. Parts List for 100 MHz Multiplier Assembly, A5A1 (Cont.)

Ref. Desig.	Singer Part No.	Description	Mfr. Code No.	Mfr. Part No.
R24		Not Used		
R25		Not Used		
R26	1-945000-182	Resistor, fixed, composition, 6.8 kilohm, ±5%, 1/4 W	01121	CB6825

Table 8-27. Parts List for Input Diode Switch Assembly, A5A2

Ref. Desig.	Singer Part No.	Description	Mfr. Code No.	Mfr. Part No.
C1	1-900117-001	Capacitor, variable, ceramic, 2.8 pF to 10 pF, 250 Vdc	91293	9312
C2	1-900098-015	Capacitor, fixed, mica, 24 pF, ±5%, 300 Vdc	04062	DM5 CC240J
C3	1-900066-025	Capacitor, fixed, ceramic, 1.2 pF, ±10%, 500 Vdc	95121	MC2.3 ±10%
C4	1-900098-015	Capacitor, fixed, mica, 24 pF, ±5%, 300 Vdc	04062	DM5 CC240J
C5	1-900117-001	Capacitor, variable, ceramic, 2.8 pF to 10 pF, 250 Vdc	91293	9312
C6	1-900077-002	Capacitor, fixed, ceramic, 0.01μF, ±20%, 100 Vdc	56289	TG-S10
C7	1-900077-002	Capacitor, fixed, ceramic, 0.01μF, ±20%, 100 Vdc	56289	TG-S10
C8	1-900077-002	Capacitor, fixed, ceramic, 0.01μF, ±20%, 100 Vdc	56289	TG-S10
C9	1-900077-002	Capacitor, fixed, ceramic, 0.01μF, ±20%, 100 Vdc	56289	TG-S10
C10	1-900077-002	Capacitor, fixed, ceramic, 0.01μF, ±20%, 100 Vdc	56289	TG-S10
C11	1-900077-002	Capacitor, fixed, ceramic, 0.01μF, ±20%, 100 Vdc	56289	TG-S10
C12	1-900077-002	Capacitor, fixed, ceramic, 0.01μF, ±20%, 100 Vdc	56289	TG-S10
CR1	1-913005-001	Diode, germanium, Vr = 30 V, If = 100 mA	03877	1N273
CR2	1-913005-001	Diode, germanium, Vr = 30 V, If = 100 mA	03877	1N273
CR3	1-913005-001	Diode, germanium, Vr = 30 V, If = 100 mA	03877	1N273
CR4	1-913005-001	Diode, germanium, Vr = 30 V, If = 100 mA	03877	1N273
CR5	1-913005-001	Diode, germanium, Vr = 30 V, If = 100 mA	03877	1N273
CR6	1-913005-001	Diode, germanium, Vr = 30 V, If = 100 mA	03877	1N273
J1	1-950031-003	Connector, jack, 3 pins	00779	2-332070-5
J2	1-950031-003	Connector, jack, 1 pin	00779	2-332070-5
J3	1-950031-003	Connector, jack, 3 pins	00779	2-332070-5
J4	1-950031-003	Connector, jack, 1 pin	00779	2-332070-5
J5	1-950031-003	Connector, jack, 3 pins	00779	2-332070-5
J6	1-950031-003	Connector, jack, 1 pin	00779	2-332070-5
J7	1-950031-003	Connector, jack, 3 pins	00779	2-332070-5
J8	1-950031-003	Connector, jack, 1 pin	00779	2-332070-5
J9	1-950031-003	Connector, jack, 3 pins	00779	2-332070-5
J10	1-950031-003	Connector, jack, 1 pin	00779	2-332070-5
J11	1-950031-003	Connector, jack, 3 pins	00779	2-332070-5

Table 8-27. Parts List for Input Diode Switch Assembly, A5A2 (Cont.)

Ref. Desig.	Singer Part No.	Description	Mfr. Code No.	Mfr. Part No.
J12	1-950031-003	Connector, jack, 1 pin	00779	2-332070-5
J13	1-950031-003	Connector, jack, 3 pins	00779	2-332070-5
L1	1-906043-016	Inductor, fixed, 1.8μH, ±10%, 725 mA	81564	4016
L2	1-906043-016	Inductor, fixed, 1.8μH, ±10%, 725 mA	81564	4016
L3	1-906043-016	Inductor, fixed, 1.8μH, ±10%, 725 mA	81564	4016
L4	1-906043-016	Inductor, fixed, 1.8μH, ±10%, 725 mA	81564	4016
L5	1-906043-016	Inductor, fixed, 1.8μH, ±10%, 725 mA	81564	4016
L6	1-906043-016	Inductor, fixed, 1.8μH, ±10%, 725 mA	81564	4016
R1	1-945000-038	Resistor, fixed, composition, 1.2 kilohm, ±10%, 1/4 W	01121	CB1221
T1	1-403801-006	Autotransformer, tapped, 6 turns	88869	
T2	1-403801-006	Autotransformer, tapped, 6 turns	88869	

Table 8-28. Parts List for 0.8 GHz Multiplier Assembly, A5A3

Ref. Desig.	Singer Part No.	Description	Mfr. Code No.	Mfr. Part No.
C1	1-900077-002	Capacitor, fixed, ceramic, 0.01μF, ±20%, 100 Vdc	56289	TG-S10
C2	1-900001-013	Capacitor, fixed, plastic, 0.1μF, ±20%, 250 Vdc	73445	C280AE, 0.1μF
C3	1-900113-001	Capacitor, variable, ceramic, 2.5 pF to 20 pF, 500 Vdc	91293	9302
C4	1-900098-014	Capacitor, fixed, mica, 22 pF, ±5%, 300 Vdc	04062	DM5 CC220J
C5	1-900098-022	Capacitor, fixed, mica, 47 pF, ±5%, 300 Vdc	04062	DM5 EC470J
C6	1-900001-013	Capacitor, fixed, plastic 0.1μF, ±20%, 250 Vdc	73445	C280AE, 0.1μF
C7	1-900113-002	Capacitor, variable, ceramic, 2 pF to 10 pF, 250 Vdc	91293	9301
C8	1-900063-002	Capacitor, variable, glass, 1.0 pF to 10 pF, 500 Vdc	0000A	GSG083
C9	1-900045-001	Capacitor, fixed, feed-thru, 470 pF, ±20%, 500 Vdc	33095	FA5C-4712
C10	1-900066-032	Capacitor, fixed, ceramic, 2.7 pF, ±10%, 500 Vdc	95121	MC-2.7±10%
C11	1-900113-002	Capacitor, variable, ceramic, 2 pF to 10 pF, 250 Vdc	91293	9301
C12	1-900063-002	Capacitor, variable, glass, 1.0 pF to 10 pF, 500 Vdc	0000A	GSG083
C13	1-900045-001	Capacitor, fixed, feed-thru, 470 pF, ±20%, 500 Vdc	33095	FA5C-4712
C14	1-900066-026	Capacitor, fixed, ceramic, 1.5 pF, ±10%, 500 Vdc	95121	MC-1.5±10%
C15	1-900113-002	Capacitor, variable, ceramic 2 pF to 10 pF, 250 Vdc	91293	9301
C16	1-900063-002	Capacitor, variable, glass, 1.0 pF to 10 pF, 500 Vdc	0000A	GSG083
C17	1-900045-001	Capacitor, fixed, feed-thru, 470 pF, ±20%, 500 Vdc	33095	FA5C-4712
C18	1-900066-026	Capacitor, fixed, ceramic, 1.5 pF, ±10%, 500 Vdc	95121	MC-1.5±10%
FL1	2-202387-001	Filter, cavity	88869	
J1	1-950031-003	Connector, jack, 3 pins	00779	2-332070-5
J2	1-950031-003	Connector, jack, 1 pin	00779	2-332070-5
J3	1-950031-003	Connector, jack, 3 pins	00779	2-332070-5
Q1	1-958018-001	Transistor, silicon, NPN	31718	2N5179
Q2	1-958101-001	Transistor, silicon, NPN	04713	2N6304
Q3	1-958101-001	Transistor, silicon, NPN	04713	2N6304
Q4	1-958101-001	Transistor, silicon, NPN	04713	2N6304
R1	1-945000-047	Resistor, fixed, composition, 6.8 kilohm, ±10%, 1/4 W	01121	CB6821
R2	1-945000-036	Resistor, fixed, composition, 820 ohm, ±10%, 1/4 W	01121	CB8211

Table 8-28. Parts List for 0.8 GHz Multiplier Assembly, A5A3 (Cont.)

Ref. Desig.	Singer Part No.	Description	Mfr. Code No.	Mfr. Part No.
R3	1-945000-025	Resistor, fixed, composition, 100 ohm, ±10%, 1/4 W	01121	CB1011
R4	1-945000-025	Resistor, fixed, composition, 100 ohm, ±10%, 1/4 W	01121	CB1011
R5	1-945000-018	Resistor, fixed, composition, 27 ohm, ±10%, 1/4 W	01121	CB2701
R6	1-945000-162	Resistor, fixed, composition, 1 kilohm, ±5%, 1/4 W	01121	CB1025
R7	1-945000-142	Resistor, fixed, composition, 150 ohm, ±5%, 1/4 W	01121	CB1515
R8	1-945000-055	Resistor, fixed, composition, 33 kilohm, ±10%, 1/4 W	01121	CB3331
R9	1-945000-027	Resistor, fixed, composition, 150 ohm, ±10%, 1/4 W	01121	CB1511
R10	1-945000-053	Resistor, fixed, composition, 22 kilohm, ±10%, 1/4 W	01121	CB2231
R11	1-945000-027	Resistor, fixed, composition, 150 ohm, ±10%, 1/4 W	01121	CB1511
R12	1-945000-196	Resistor, fixed, composition, 27 kilohm, ±5%, 1/4 W	01121	CB2735
T1	1-403801-007	Autotransformer, tapped, 7 turns	88869	
T2	1-999001-003	Autotransformer, tapped, 1 turn	88869	
T3	1-999001-003	Autotransformer, tapped,1 turn	88869	
T4	1-999001-003	Autotransformer, tapped, 1 turn	88869	

Table 8-29. Parts List for 0.9 GHz Multiplier Assembly, A5A4

Ref. Desig.	Singer Part No.	Description	Mfr. Code No.	Mfr. Part No.
C1	1-900077-002	Capacitor, fixed, ceramic, 0.01μF, ±20%, 100 Vdc	56289	TG-S10
C2	1-900001-013	Capacitor, fixed, plastic, 0.1μF, ±20%, 250 Vdc	73445	C280AE, 0.1μF
C3	1-900113-001	Capacitor, variable, ceramic, 2.5 pF to 20 pF, 500 Vdc	91293	9302
C4	1-900098-014	Capacitor, fixed, mica, 22 pF, ±5%, 300 Vdc	04062	DM5 CC220J
C5	1-900098-022	Capacitor, fixed, mica, 47 pF, ±5%, 300 Vdc	04062	DM5 EC470J
C6	1-900001-013	Capacitor, fixed, plastic, 0.1μF, ±20%, 250 Vdc	73445	C280AE, 0.1μF
C7	1-900113-002	Capacitor, variable, ceramic, 2 pF to 10 pF, 250 Vdc	91293	9301
C8	1-900063-002	Capacitor, variable, glass, 1.0 pF to 10 pF, 500 Vdc	0000A	GSG083
C9	1-900045-001	Capacitor, fixed, feed-thru, 470 pF, ±20%, 500 Vdc	33095	FA5C-4712
C10	1-900066-023	Capacitor, fixed, ceramic, 1.0 pF, ±10%, 500 Vdc	95121	MC-1.0±10%
C11	1-900113-002	Capacitor, variable, ceramic, 2 pF to 10 pF, 250 Vdc	91293	9301
C12	1-900063-002	Capacitor, variable, glass, 1.0 pF to 10 pF, 500 Vdc	0000A	GSG083
C13	1-900045-001	Capacitor, fixed, feed-thru, 470 pF, ±20%, 500 Vdc	33095	FA5C-4712
C14	1-900066-023	Capacitor, fixed, ceramic, 1.0 pF, ±10%, 500 Vdc	95121	MC-1.0±10%
C15	1-900113-002	Capacitor, variable, ceramic, 2 pF to 10 pF, 250 Vdc	91293	9301
C16	1-900063-002	Capacitor, variable, glass, 1.0 pF to 10 pF, 500 Vdc	0000A	GSG083
C17	1-900045-001	Capacitor, fixed, feed-thru, 470 pF, ±20%, 500 Vdc	33095	FA5C-4712
C18	1-900066-023	Capacitor, fixed, ceramic, 1.0 pF, ±10%, 500 Vdc	95121	MC-1.0±10%
FL1	2-202387-001	Filter, cavity	88869	
J1	1-950031-003	Connector, jack, 3 pins	00779	2-332070-5
J2	1-950031-003	Connector, jack, 1 pin	00779	2-332070-5
J3	1-950031-003	Connector, jack, 3 pins	00779	2-332070-5
Q1	1-958018-001	Transistor, silicon, NPN	31718	2N5179
Q2	1-958099-002	Transistor, silicon, NPN	25403	BFR91
Q3	1-958101-001	Transistor, silicon, NPN	04713	2N6304
Q4	1-958101-001	Transistor, silicon, NPN	04713	2N6304
R1	1-945000-047	Resistor, fixed, composition, 6.8 kilohm, ±10%, 1/4 W	01121	CB6821
R2	1-945000-036	Resistor, fixed, composition, 820 ohm, ±10%, 1/4 W	01121	CB8211

Table 8-29. Parts List for 0.9 GHz Multiplier Assembly, A5A4 (Cont.)

Ref. Desig.	Singer Part No.	Description	Mfr. Code No.	Mfr. Part No.
R3	1-945000-025	Resistor, fixed, composition, 100 ohm, ±10%, 1/4 W	01121	CB1011
R4	1-945000-025	Resistor, fixed, composition, 100 ohm, ±10%, 1/4 W	01121	CB1011
R5	1-945000-018	Resistor, fixed, composition, 27 ohm, ±10%, 1/4 W	01121	CB2701
R6	1-945000-162	Resistor, fixed, composition, 1 kilohm, ±5%, 1/4 W	01121	CB1025
R7	1-945000-148	Resistor, fixed, composition, 270 ohm, ±5%, 1/4 W	01121	CB2715
R8	1-945000-055	Resistor, fixed, composition, 33 kilohm, ±10%, 1/4 W	01121	CB3331
R9	1-945000-027	Resistor, fixed, composition, 150 ohm, ±10%, 1/4 W	01121	CB1511
R10	1-945000-053	Resistor, fixed, composition, 22 kilohm, ±10%, 1/4 W	01121	CB2231
R11	1-945000-021	Resistor, fixed, composition, 47 ohm, ±10%, 1/4 W	01121	CB4701
R12	1-945000-196	Resistor, fixed, composition, 27 kilohm, ±5%, 1/4 W	01121	CB2735
T1	1-403801-007	Autotransformer, tapped, 7 turns	88869	
T2	1-999001-003	Autotransformer, tapped, 1 turn	88869	
T3	1-999001-003	Autotransformer, tapped, 1 turn	88869	
T4	1-999001-003	Autotransformer, tapped, 1 turn	88869	

Table 8-30. Parts List for 1.0 GHz Multiplier Assembly, A5A5

Ref. Desig.	Singer Part No.	Description	Mfr. Code No.	Mfr. Part No.
C1	1-900077-002	Capacitor, fixed, ceramic, 0.01μF, ±20%, 100 Vdc	56289	TG-S10
C2	1-900001-013	Capacitor, fixed, plastic, 0.1μF, ±20%, 250 Vdc	73445	C280AE, 0.1μF
C3	1-900113-001	Capacitor, variable, ceramic, 2.5 pF to 20 pF, 500 Vdc	91293	9302
C4	1-900098-014	Capacitor, fixed, mica, 22 pF, ±5%, 300 Vdc	04062	DM5 CC220J
C5	1-900098-022	Capacitor, fixed, mica, 47 pF, ±5%, 300 Vdc	04062	DM5 EC470J
C6	1-900001-013	Capacitor, fixed, plastic, 0.1μF, ±20%, 250 Vdc	73445	C280AE, 0.1μF
C7	1-900113-002	Capacitor, variable, ceramic, 2 pF to 10 pF, 250 Vdc	91293	9301
C8	1-900063-002	Capacitor, variable, glass, 1.0 pF to 10 pF, 500 Vdc	0000A	GSG083
C9	1-900045-001	Capacitor, fixed, feed-thru, 470 pF, ±20%, 500 Vdc	33095	FA5C-4712
C10	1-900066-021	Capacitor, fixed, ceramic, 0.82 pF, ±10%, 500 Vdc	95121	MC-0.82±10%
C11	1-900113-002	Capacitor, variable, ceramic, 2 pF to 10 pF, 250 Vdc	91293	9301
C12	1-900063-002	Capacitor, variable, glass, 1.0 pF to 10 pF, 500 Vdc	0000A	GSG083
C13	1-900045-001	Capacitor, fixed, feed-thru, 470 pF, ±20%, 500 Vdc	33095	FA5C-4712
C14	1-900066-026	Capacitor, fixed, ceramic, 1.5 pF, ±10%, 500 Vdc	95121	MC-1.5±10%
C15	1-900113-002	Capacitor, variable, ceramic, 2 pF to 10 pF, 250 Vdc	91293	9301
C16	1-900063-002	Capacitor, variable, glass, 1.0 pF to 10 pF, 500 Vdc	0000A	GSG083
C17	1-900045-001	Capacitor, fixed, feed-thru, 470 pF, ±20%, 500 Vdc	33095	FA5C-4712
C18	1-900066-021	Capacitor, fixed, ceramic, 0.82 pF, ±10%, 500 Vdc	95121	MC-0.82±10%
FL1	2-202387-002	Filter, cavity	88869	
J1	1-950031-003	Connector, jack, 3 pins	00779	2-332070-5
J2	1-950031-003	Connector, jack, 1 pin	00779	2-332070-5
J3	1-950031-003	Connector, jack, 3 pins	00779	2-332070-5
Q1	1-958018-001	Transistor, silicon, NPN	31718	2N5179
Q2	1-958099-002	Transistor, silicon, NPN	25403	BFR91
Q3	1-958101-001	Transistor, silicon, NPN	04713	2N6304
Q4	1-958099-003	Transistor, silicon, NPN	04713	SRF2277
R1	1-945000-047	Resistor, fixed, composition, 6.8 kilohm, ±10%, 1/4 W	01121	CB6821
R2	1-945000-036	Resistor, fixed, composition, 820 ohm, ±10%, 1/4 W	01121	CB8211

Table 8-30. Parts List for 1.0 GHz Multiplier Assembly, A5A5 (Cont.)

Ref. Desig.	Singer Part No.	Description	Mfr. Code No.	Mfr. Part No.
R3	1-945000-025	Resistor, fixed, composition, 100 ohm, ±10%, 1/4 W	01121	CB1011
R4	1-945000-025	Resistor, fixed, composition, 100 ohm, ±10%, 1/4 W	01121	CB1011
R5	1-945000-018	Resistor, fixed, composition, 27 ohm, ±10%, 1/4 W	01121	CB2701
R6	1-945000-162	Resistor, fixed, composition, 1 kilohm, ±5%, 1/4 W	01121	CB1025
R7	1-945000-148	Resistor, fixed, composition, 270 ohm, ±5%, 1/4 W	01121	CB2715
R8	1-945000-055	Resistor, fixed, composition, 33 kilohm, ±10%, 1/4 W	01121	CB3331
R9	1-945000-024	Resistor, fixed, composition, 82 ohm, ±10%, 1/4 W	01121	CB8201
R10	1-945000-184	Resistor, fixed, composition, 8.2 kilohm, ±10%, 1/4 W	01121	CB8221
R11	1-945000-140	Resistor, fixed, composition, 120 ohm, ±10%, 1/4 W	01121	CB1211
R12	1-945000-196	Resistor, fixed, composition, 27 kilohm, ±5%, 1/4 W	01121	CB2735
T1	1-403801-007	Autotransformer, tapped, 7 turns	88869	
T2	1-999001-003	Autotransformer, tapped, 1 turn	88869	
T3	1-999001-003	Autotransformer, tapped, 1 turn	88869	
T4	1-999001-003	Autotransformer, tapped, 1 turn	88869	

Table 8-31. Parts List for 1.1 GHz Multiplier Assembly, A5A6

Ref. Desig.	Singer Part No.	Description	Mfr. Code No.	Mfr. Part No.
C1	1-900077-002	Capacitor, fixed, ceramic, 0.01μF, ±20%, 100 Vdc	56289	TG-S10
C2	1-900001-013	Capacitor, fixed, plastic, 0.1μF, ±20%, 250 Vdc	73445	C280AE, 0.1μF
C3	1-900113-001	Capacitor, variable, ceramic, 2.5 pF to 20 pF, 500 Vdc	91293	9302
C4	1-900098-014	Capacitor, fixed, mica, 22 pF, ±5%, 300 Vdc	04062	DM5 CC220J
C5	1-900098-016	Capacitor, fixed, mica, 27 pF, ±5%, 300 Vdc	04062	DM5 EC270J
C6	1-900001-013	Capacitor, fixed, plastic, 0.1μF, ±20%, 250 Vdc	73445	C280AE, 0.1μF
C7	1-900066-019	Capacitor, fixed, ceramic, 0.68 pF, ±10%, 500 Vdc	95121	MC-0.68±10%
C8	1-900063-002	Capacitor, variable, glass, 1.0 pF to 10 pF, 500 Vdc	0000A	GSG083
C9	1-900045-001	Capacitor, fixed, feed-thru, 470 pF, ±20%, 500 Vdc	33095	FA5C-4712
C10	1-900066-026	Capacitor, fixed, ceramic, 1.5 pF, ±10%, 500 Vdc	95121	MC-1.5±10%
C11		Not Used		
C12	1-900063-002	Capacitor, variable, glass, 1.0 pF to 10 pF, 500 Vdc	0000A	GSG083
C13	1-900045-001	Capacitor, fixed, feed-thru, 470 pF, ±20%, 500 Vdc	33095	FA5C-4712
C14	1-900066-023	Capacitor, fixed, ceramic, 1.0 pF, ±10%, 500 Vdc	95121	MC-1.0±10%
C15		Not Used		
C16	1-900063-002	Capacitor, variable, glass, 1.0 pF to 10 pF, 500 Vdc	0000A	GSG083
C17	1-900045-001	Capacitor, fixed, feed-thru, 470 pF, ±20%, 500 Vdc	33095	FA5C-4712
C18	1-900066-021	Capacitor, fixed, ceramic, 0.82 pF, ±10%, 500 Vdc	95121	MC-0.82±10%
C19	1-900066-026	Capacitor, fixed, ceramic, 1.5 pF, ±10%, 500 Vdc	95121	MC-1.5±10%
C20	1-900066-026	Capacitor, fixed, ceramic, 1.5 pF, ±10%, 500 Vdc	95121	MC-1.5±10%
C21	1-900066-028	Capacitor, fixed, ceramic, 2 pF, ±10%, 500 Vdc	95121	MC-2.0±10%
FL1	2-202387-002	Filter, cavity	88869	
J1	1-950031-003	Connector, jack, 3 pins	00779	2-332070-5
J2	1-950031-003	Connector, jack, 1 pin	00779	2-332070-5
J3	1-950031-003	Connector, jack, 3 pins	00779	2-332070-5
Q1	1-958018-001	Transistor, silicon, NPN	31718	2N5179
Q2	1-958099-002	Transistor, silicon, NPN	04713	SRF2277
Q3	1-958099-003	Transistor, silicon, NPN	04713	SRF2277
Q4	1-958099-003	Transistor, silicon, NPN	04713	SRF2277

Table 8-31. Parts List for 1.1 GHz Multiplier Assembly A5A6 (Cont.)

Ref. Desig.	Singer Part No.	Description	Mfr. Code No.	Mfr. Part No.
R1	1-945000-047	Resistor, fixed, composition, 6.8 kilohm, ±10%, 1/4 W	01121	CB6821
R2	1-945000-036	Resistor, fixed, composition, 820 ohm, ±10%, 1/4 W	01121	CB8211
R3	1-945000-025	Resistor, fixed, composition, 100 ohm, ±10%, 1/4 W	01121	CB1011
R4	1-945000-025	Resistor, fixed, composition, 100 ohm, ±10%, 1/4 W	01121	CB1011
R5	1-945000-018	Resistor, fixed, composition, 27 ohm, ±10%, 1/4 W	01121	CB2701
R6	1-945000-162	Resistor, fixed, composition, 1 kilohm, ±5%, 1/4 W	01121	CB1025
R7	1-945000-148	Resistor, fixed, composition, 270 ohm, ±5%, 1/4 W	01121	CB2715
R8	1-945000-184	Resistor, fixed, composition, 8.2 kilohm, ±5%, 1/4 W	01121	CB8225
R9	1-945000-140	Resistor, fixed, composition, 120 ohm, ±5%, 1/4 W	01121	CB1215
R10	1-945000-184	Resistor, fixed, composition, 8.2 kilohm, ±5%, 1/4 W	01121	CB8225
R11	1-945000-140	Resistor, fixed, composition, 120 ohm, ±5%, 1/4 W	01121	CB1215
R12	1-945000-196	Resistor, fixed, composition, 27 kilohm, ±5%, 1/4 W	01121	CB2735
T1	1-403801-007	Autotransformer, tapped, 7 turns	88869	
T2	1-999001-003	Autotransformer, tapped, 1 turn	88869	
T3	1-999001-003	Autotransformer, tapped, 1 turn	88869	
T4	1-999001-003	Autotransformer, tapped, 1 turn	88869	

Table 8-32. Parts List for 1.2 GHz Multiplier Assembly, A5A7

Ref. Desig.	Singer Part No.	Description	Mfr. Code No.	Mfr. Part No.
C1	1-900077-002	Capacitor, fixed, ceramic, 0.01 μF, ±20%, 100 Vdc	56289	TG-S10
C2	1-900001-013	Capacitor, fixed, plastic, 0.1 μF, ±20%, 250 Vdc	73445	C280AE, 0.1μF
C3	1-900113-001	Capacitor, variable, ceramic, 2.5 pF to 20 pF, 500 Vdc	91293	9302
C4	1-900098-014	Capacitor, fixed, mica, 22 pF, ±5%, 300 Vdc	04062	DM5 CC220J
C5	1-900098-016	Capacitor, fixed, mica, 27 pF, ±5%, 300 Vdc	04062	DM5 EC270J
C6	1-900001-013	Capacitor, fixed, plastic, 0.1 μF, ±20%, 250 Vdc	73445	C280AE, 0.1μF
C7	1-900066-017	Capacitor, fixed, ceramic, 0.56 pF, ±10%, 500 Vdc	95121	MC-0.56±10%
C8	1-900063-002	Capacitor, variable, glass, 1.0 pF to 10 pF, 500 Vdc	0000A	GSG083
C9	1-900045-001	Capacitor, fixed, feed-thru, 470 pF, ±20%, 500 Vdc	33095	FA5C-4712
C10	1-900066-019	Capacitor, fixed, ceramic, 0.68 pF, ±10%, 500 Vdc	95121	MC-0.68±10%
C11		Not Used		
C12	1-900063-002	Capacitor, variable, glass, 1.0 pF to 10 pF, 500 Vdc	0000A	GSG083
C13	1-900045-001	Capacitor, fixed, feed-thru, 470 pF, ±20%, 500 Vdc	33095	FA5C-4712
C14	1-900066-019	Capacitor, fixed, ceramic, 0.68 pF, ±10%, 500 Vdc	95121	MC-0.68±10%
C15		Not Used		
C16	1-900063-002	Capacitor, variable, glass, 1.0 pF to 10 pF, 500 Vdc	0000A	GSG083
C17	1-900045-001	Capacitor, fixed, feed-thru, 470 pF, ±20%, 500 Vdc	33095	FA5C-4712
C18	1-900066-017	Capacitor, fixed, ceramic, 0.56 pF, ±10%, 500 Vdc	95121	MC-0.56±10%
C19	1-900066-017	Capacitor, fixed, ceramic, 0.56 pF, ±10%, 500 Vdc	95121	MC-0.56±10%
C20	1-900066-017	Capacitor, fixed, ceramic, 0.56 pF, ±10%, 500 Vdc	95121	MC-0.56±10%
C21	1-900066-026	Capacitor, fixed, ceramic, 1.5 pF, ±10%, 500 Vdc	95121	MC-1.5±10%
C22	1-900066-026	Capacitor, fixed, ceramic, 1.5 pF, ±10%, 500 Vdc	95121	MC-1.5±10%
FL1	2-202387-002	Filter, cavity	88869	
J1	1-950031-003	Connector, jack, 3 pins	00779	2-332070-5
J2	1-950031-003	Connector, jack, 1 pin	00779	2-332070-5
J3	1-950031-003	Connector, jack, 3 pins	00779	2-332070-5
Q1	1-958018-001	Transistor, silicon, NPN	31718	2N5179
Q2	1-958099-002	Transistor, silicon, NPN	04713	BFR91

Table 8-32. Parts List for 1.2 GHz Multiplier Assembly, A5A7 (Cont.)

Ref. Desig.	Singer Part No.	Description	Mfr. Code No.	Mfr. Part No.
Q3	1-958099-002	Transistor, silicon, NPN	04713	BFR91
Q4	1-958099-002	Transistor, silicon, NPN	04713	BFR91
R1	1-945000-047	Resistor, fixed, composition, 6.8 kilohm, ±10%, 1/4 W	01121	CB6821
R2	1-945000-036	Resistor, fixed, composition, 820 ohm, ±10%, 1/4 W	01121	CB8211
R3	1-945000-025	Resistor, fixed, composition, 100 ohm, ±10%, 1/4 W	01121	CB1011
R4	1-945000-025	Resistor, fixed, composition, 100 ohm, ±10%, 1/4 W	01121	CB1011
R5	1-945000-018	Resistor, fixed, composition, 27 ohm, ±10%, 1/4 W	01121	CB2701
R6	1-945000-162	Resistor, fixed, composition, 1 kilohm, ±5%, 1/4 W	01121	CB1025
R7	1-945000-148	Resistor, fixed, composition, 270 ohm, ±5%, 1/4 W	01121	CB2715
R8	1-945000-184	Resistor, fixed, composition, 8.2 kilohm, ±5%, 1/4 W	01121	CB8225
R9	1-945000-140	Resistor, fixed, composition, 120 ohm, ±5%, 1/4 W	01121	CB1215
R10	1-945000-184	Resistor, fixed, composition, 8.2 kilohm, ±5%, 1/4 W	01121	CB8225
R11	1-945000-140	Resistor, fixed, composition, 120 ohm, ±5%, 1/4 W	01121	CB1215
R12	1-945000-196	Resistor, fixed, composition, 27 kilohm, ±5%, 1/4 W	01121	CB2735
T1	1-403801-007	Autotransformer, tapped, 7 turns	88869	
T2	1-999001-003	Autotransformer, tapped, 1 turn	88869	
T3	1-999001-003	Autotransformer, tapped, 1 turn	88869	
T4	1-999001-003	Autotransformer, tapped, 1 turn	88869	

Table 8-33. Parts List for 1.3 GHz Multiplier Assembly, A5A8

Ref. Desig.	Singer Part No.	Description	Mfr. Code No.	Mfr. Part No.
C1	1-900077-002	Capacitor, fixed, ceramic, 0.01μF, ±20%, 100 Vdc	56289	TG-S10
C2	1-900001-013	Capacitor, fixed, plastic, 0.1μF, ±20%, 250 Vdc	73445	C280AE, 0.1μF
C3	1-900113-001	Capacitor, variable, ceramic, 2.5 pF to 20 pF, 500 Vdc	91293	9302
C4	1-900098-014	Capacitor, fixed, mica, 22 pF, ±5%, 300 Vdc	04062	DM5 CC220J
C5	1-900098-016	Capacitor, fixed, mica, 27 pF, ±5%, 300 Vdc	04062	DM5 EC270J
C6	1-900001-013	Capacitor, fixed, plastic, 0.1μF, ±20%, 250 Vdc	73445	C280AE, 0.1μF
C7	1-900066-019	Capacitor, fixed, ceramic, 0.68 pF, ±10%, 500 Vdc	95121	MC-0.68±10%
C8	1-900063-002	Capacitor, variable, glass, 1.0 pF to 10 pF, 500 Vdc	0000A	GSG083
C9	1-900045-001	Capacitor, fixed, feed-thru, 470 pF, ±20%, 500 Vdc	33095	FA5C-4712
C10	1-900066-023	Capacitor, fixed, ceramic, 1.0 pF, ±10%, 500 Vdc	95121	MC-1.0±10%
C11		Not Used		
C12	1-900063-002	Capacitor, variable, glass, 1.0 pF to 10 pF, 500 Vdc	0000A	GSG083
C13	1-900045-001	Capacitor, fixed, feed-thru, 470 pF, ±20%, 500 Vdc	33095	FA5C-4712
C14	1-900066-017	Capacitor, fixed, ceramic, 0.56 pF, ±10%, 500 Vdc	95121	MC-0.56±10%
C15		Not Used		
C16	1-900063-002	Capacitor, variable, glass, 1.0 pF to 10 pF, 500 Vdc	0000A	GSG083
C17	1-900045-001	Capacitor, fixed, feed-thru, 470 pF, ±20%, 500 Vdc	33095	FA5C-4712
C18	1-900066-017	Capacitor, fixed, ceramic, 0.56 pF, ±10%, 500 Vdc	95121	MC-0.56±10%
C19	1-900066-019	Capacitor, fixed, ceramic, 0.68 pF, ±10%, 500 Vdc	95121	MC-0.68±10%
C20	1-900066-019	Capacitor, fixed, ceramic, 0.68 pF, ±10%, 500 Vdc	95121	MC-0.68±10%
C21	1-900066-023	Capacitor, fixed, ceramic, 1.0 pF, ±10%, 500 Vdc	95121	MC-1.0±10%
C22	1-900066-023	Capacitor, fixed, ceramic, 1.0 pF, ±10%, 500 Vdc	95121	MC-1.0±10%
FL1	2-202387-002	Filter, cavity	88869	
J1	1-950031-003	Connector, jack, 3 pins	00779	2-332070-5
J2	1-950031-003	Connector, jack, 1 pin	00779	2-332070-5
J3	1-950031-003	Connector, jack, 3 pins	00779	2-332070-5
Q1	1-958018-001	Transistor, silicon, NPN	31718	2N5179
Q2	1-958099-001	Transistor, silicon, NPN	25403	BFR91

Table 8-33. Parts List for 1.3 GHz Multiplier Assembly, A5A8 (Cont.)

Ref. Desig.	Singer Part No.	Description	Mfr. Code No.	Mfr. Part No.
Q3	1-958099-001	Transistor, silicon, NPN	25403	BFR91
Q4	1-958099-001	Transistor, silicon, NPN	25403	BFR91
R1	1-945000-047	Resistor, fixed, composition, 6.8 kilohm, ±10%, 1/4 W	01121	CB6821
R2	1-945000-036	Resistor, fixed, composition, 820 ohm, ±10%, 1/4 W	01121	CB8211
R3	1-945000-025	Resistor, fixed, composition, 100 ohm, ±10%, 1/4 W	01121	CB1011
R4	1-945000-025	Resistor, fixed, composition, 100 ohm, ±10%, 1/4 W	01121	CB1011
R5	1-945000-018	Resistor, fixed, composition, 27 ohm, ±10%, 1/4 W	01121	CB2701
R6	1-945000-162	Resistor, fixed, composition, 1 kilohm, ±5%, 1/4 W	01121	CB1025
R7	1-945000-148	Resistor, fixed, composition, 270 ohm, ±5%, 1/4 W	01121	CB2715
R8	1-945000-184	Resistor, fixed, composition, 8.2 kilohm, ±5%, 1/4 W	01121	CB8225
R9	1-945000-140	Resistor, fixed, composition, 120 ohm, ±5%, 1/4 W	01121	CB1215
R10	1-945000-184	Resistor, fixed, composition, 8.2 kilohm, ±5%, 1/4 W	01121	CB8225
R11	1-945000-140	Resistor, fixed, composition, 120 ohm, ±5%, 1/4 W	01121	CB1215
R12	1-945000-196	Resistor, fixed, composition, 27 kilohm, ±5%, 1/4 W	01121	CB2735
T1	1-403801-007	Autotransformer, tapped, 7 turns	88869	
T2	1-999001-003	Autotransformer, tapped, 1 turn	88869	
T3	1-999001-003	Autotransformer, tapped, 1 turn	88869	
T4	1-999001-003	Autotransformer, tapped, 1 turn	88869	

Table 8-34. Parts List for Output Diode Switch Assembly, A5A9

Ref. Desig.	Singer Part No.	Description	Mfr. Code No.	Mfr. Part No.
C1	1-900003-047	Capacitor, fixed, mica, 470 pF, ±5%, 500 Vdc	72136	DM15F471J
C2	1-900098-005	Capacitor, fixed, mica, 5 pF, ±10%, 300 Vdc	04062	DM5 CC050K
C3	1-900003-047	Capacitor, fixed, mica, 470 pF, ±5%, 500 Vdc	72136	DM15F471J
C4	1-900098-002	Capacitor, fixed, mica, 2 pF, ±0.5 pF, 300 Vdc	04062	DM5 CC020D
C5	1-900003-047	Capacitor, fixed, mica, 470 pF, ±5%, 500 Vdc	72136	DM15F471J
C6	1-900098-002	Capacitor, fixed, mica, 2 pF, ±0.5 pF, 300 Vdc	04062	DM5 CC020D
C7	1-900003-047	Capacitor, fixed, mica, 470 pF ±5%, 500 Vdc	72136	DM15F471J
C8	1-900098-002	Capacitor, fixed, mica, 2 pF, ±0.5 pF, 300 Vdc	04062	DM5 CC020D
C9	1-900003-047	Capacitor, fixed, mica, 470 pF, ±5%, 500 Vdc	72136	DM15F471J
C10	1-900098-004	Capacitor, fixed, mica, 4 pF, ±0.5 pF, 300 Vdc	04062	DM5 CC040D
C11	1-900003-047	Capacitor, fixed, mica, 470 pF, ±5%, 500 Vdc	72136	DM15F471J
C12	1-900098-002	Capacitor, fixed, mica, 2 pF, ±0.5 pF, 300 Vdc	04062	DM5 CC020D
C13	1-900098-004	Capacitor, fixed, mica, 4 pF, ±0.5 pF, 300 Vdc	04062	DM5 CC040D
CR1	1-913005-001	Diode, germanium, Vr = 30 V, If = 100 mA	03877	1N273
CR2	1-913005-001	Diode, germanium, Vr = 30 V, If = 100 mA	03877	1N273
CR3	1-913005-001	Diode, germanium, Vr = 30 V, If = 100 mA	03877	1N273
CR4	1-913005-001	Diode, germanium, Vr = 30 V, If = 100 mA	03877	1N273
CR5	1-913005-001	Diode, germanium, Vr = 30 V, If = 100 mA	03877	1N273
CR6	1-913005-001	Diode, germanium, Vr = 30 V, If = 100 mA	03877	1N273
J1	1-950031-003	Connector, jack, 1 pin	00779	2-332070-5
J2	1-950031-003	Connector, jack, 1 pin	00779	2-332070-5
J3	1-950031-003	Connector, jack, 3 pins	00779	2-332070-5
J4	1-950031-003	Connector, jack, 1 pin	00779	2-332070-5
J5	1-950031-003	Connector, jack, 3 pins	00779	2-332070-5
J6	1-950031-003	Connector, jack, 1 pin	00779	2-332070-5
J7	1-955031-003	Connector, jack, 3 pins	00779	2-332070-5
J8	1-950031-003	Connector, jack, 1 pin	00779	2-332070-5
J9	1-950031-003	Connector, jack, 3 pins	00779	2-332070-5

Table 8-34. Parts List for Output Diode Switch Assembly, A5A9 (Cont.)

Ref. Desig.	Singer Part No.	Description	Mfr. Code No.	Mfr. Part No.
J10	1-950031-003	Connector, jack, 1 pin	00779	2-332070-5
J11	1-950031-003	Connector, jack, 3 pins	00779	2-332070-5
J12	1-950031-003	Connector, jack, 1 pin	00779	2-332070-5
J13	1-950031-003	Connector, jack, 3 pins	00779	2-332070-5
J14	1-950031-003	Connector, jack, 1 pin	00779	2-332070-5
J15	1-950031-003	Connector, jack, 1 pin	00779	2-332070-5
J16	1-950031-003	Connector, jack, 1 pin	00779	2-332070-5
J17	1-950031-003	Connector, jack, 1 pin	00779	2-332070-5
J18	1-950031-003	Connector, jack, 1 pin	00779	2-332070-5
J19	1-950031-003	Connector, jack, 1 pin	00779	2-332070-5
J20	1-950031-003	Connector, jack, 3 pins	00779	2-332070-5
L1	132-0377-001	Inductor, fixed, 7 turns	88869	
L2	132-0377-001	Inductor, fixed, 7 turns	88869	
L3	132-0377-001	Inductor, fixed, 7 turns	88869	
L4	132-0377-001	Inductor, fixed, 7 turns	88869	
L5	132-0377-001	Inductor, fixed, 7 turns	88869	
L6	132-0377-001	Inductor, fixed, 7 turns	88869	
L7	132-0377-001	Inductor, fixed, 7 turns	88869	
Q1	1-958000-002	Transistor, silicon, PNP	04713	2N3906
Q2	1-958000-002	Transistor, silicon, PNP	04713	2N3906
Q3	1-958000-002	Transistor, silicon, PNP	04713	2N3906
Q4	1-958000-002	Transistor, silicon, PNP	04713	2N3906
Q5	1-958000-002	Transistor, silicon, PNP	04713	2N3906
Q6	1-958000-002	Transistor, silicon, PNP	04713	2N3906
R1	1-945000-048	Resistor, fixed, composition, 8.2 kilohm, ±10%, 1/4 W	01121	CB8221
R2	1-945000-032	Resistor, fixed, composition, 390 ohm, ±10%, 1/4 W	01121	CB3911
R3	1-945000-032	Resistor, fixed, composition, 390 ohm, ±10%, 1/4 W	01121	CB3911
R4	1-945000-048	Resistor, fixed, composition, 8.2 kilohm, ±10%, 1/4 W	01121	CB8221
R5	1-945000-048	Resistor, fixed, composition, 8.2 kilohm, ±10%, 1/4 W	01121	CB8221
R6	1-945000-032	Resistor, fixed, composition, 390 ohm, ±10%, 1/4 W	01121	CB3911
R7	1-945000-032	Resistor, fixed, composition, 390 ohm, ±10%, 1/4 W	01121	CB3911

Table 8-34. Parts List for Output Diode Switch Assembly, A5A9 (Cont.)

Ref. Desig.	Singer Part No.	Description	Mfr. Code No.	Mfr. Part No.
R8	1-945000-048	Resistor, fixed, composition, 8.2 kilohm, ±10%, 1/4 W	01121	CB8221
R9	1-945000-048	Resistor, fixed, composition, 8.2 kilohm, ±10%, 1/4 W	01121	CB8221
R10	1-945000-032	Resistor, fixed, composition, 390 ohm, ±10%, 1/4 W	01121	CB3911
R11	1-945000-032	Resistor, fixed, composition, 390 ohm, ±10%, 1/4 W	01121	CB3911
R12	1-945000-048	Resistor, fixed, composition, 8.2 kilohm, ±10%, 1/4 W	01121	CB8221
R13	1-945000-030	Resistor, fixed, composition, 270 ohm, ±10%, 1/4 W	01121	CB2711

Table 8-35. Parts List for Final Broadband Amplifier Assembly, A5A10

Ref. Desig.	Singer Part No.	Description	Mfr. Code No.	Mfr. Part No.
AT1	1-904000-001	Attenuator, fixed, 3 dB	24602	TS0100T303
C1		Not used		
C2		Not used		
C3		Not used		
C4		Not used		
C5		Not used		
C6	1-900115-005	Capacitor, fixed, tantalum, 2.2μF, ±20%, 15 Vdc	12954	D2R2GS1D15M
C7	1-900115-005	Capacitor, fixed, tantalum, 2.2μF, ±20%, 15 Vdc	12954	D2R2GS1D15M
C8	1-900115-005	Capacitor, fixed, tantalum, 2.2μF, ±20%, 15 Vdc	12954	D2R2GS1D15M
C9	1-900104-007	Capacitor, fixed, ceramic, 1μF, ±20%, 50 Vdc	16508	3420-050E-105M
C10	1-900117-001	Capacitor, variable, ceramic, 2.8 pF to 10 pF, 250 Vdc	91293	9312
C11	1-900115-005	Capacitor, fixed, tantalum, 2.2μF, ±20%, 15 Vdc	12954	D2R2GS1D15M
C12	1-900115-005	Capacitor, fixed, tantalum, 2.2μF, ±20%, 15 Vdc	12954	D2R2GS1D15M
C13	1-900115-005	Capacitor, fixed, tantalum, 2.2μF, ±20%, 15 Vdc	12954	D2R2GS1D15M
C14	1-900115-005	Capacitor, fixed, tantalum, 2.2μF, ±20%, 15 Vdc	12954	D2R2GS1D15M
C15	1-900117-001	Capacitor, variable, ceramic, 2.8 pF to 10 pF, 250 Vdc	91293	9312
C16	1-900115-005	Capacitor, fixed, tantalum, 2.2μF, ±20%, 15 Vdc	12954	D2R2GS1D15M
C17	1-900115-005	Capacitor, fixed, tantalum 2.2μF, ±20%, 15 Vdc	12954	D2R2GS1D15M
C18	1-900115-005	Capacitor, fixed, tantalum, 2.2μF, ±20%, 15 Vdc	12954	D2R2GS1D15M
C19	1-900115-005	Capacitor, fixed, tantalum, 2.2μF, ±20%, 15 Vdc	12954	D2R2GS1D15M
C20	1-900117-001	Capacitor, variable, ceramic, 2.8 pF to 10 pF, 250 Vdc	91293	9312
C21	1-900115-005	Capacitor, fixed, tantalum, 2.2μF, ±20%, 15 Vdc	12954	D2R2GS1D15M
C22	1-900115-005	Capacitor, fixed, tantalum, 2.2μF, ±20%, 15 Vdc	12954	D2R2GS1D15M
C23	1-900115-005	Capacitor, fixed, tantalum, 2.2μF, ±20%, 15 Vdc	12954	D2R2GS1D15M
C24	1-900098-003	Capacitor, fixed, mica, 3 pF, ±0.5 pF, 300 Vdc	04062	DM5 CC030D
C25	1-900115-005	Capacitor, fixed, tantalum, 2.2μF, ±20%, 15 Vdc	12954	D2R2GS1D15M

Table 8-35. Parts List for Final Broadband Amplifier Assembly, A5A10 (Cont.)

Ref. Desig.	Singer Part No.	Description	Mfr. Code No.	Mfr. Part No.
C26	1-900115-005	Capacitor, fixed, tantalum, 2.2μF, ±20%, 15 Vdc	12954	D2R2GS1D15M
C27	1-900115-005	Capacitor, fixed, tantalum, 2.2μF, ±20%, 15 Vdc	12954	D2R2GS1D15M
C28	1-900098-002	Capacitor, fixed, mica, 2 pF, ±0.5 pF, 300 Vdc	04062	DM5 CC020D
C29	1-900077-002	Capacitor, fixed, ceramic, 0.01μF, ±20%, 100 Vdc	56289	TG-S10
C30	1-900077-002	Capacitor, fixed, ceramic, 0.01μF, ±20%, 100 Vdc	56289	TG-S10
C31	1-900104-007	Capacitor, fixed, ceramic, 1μF, ±20%, 50 Vdc	16508	3420-050E-105M
C32	1-900115-006	Capacitor, fixed, tantalum, 22μF, ±20%, 15 Vdc	12954	D22GS1D15M
C33	1-900115-006	Capacitor, fixed, tantalum, 22μF, ±20%, 15 Vdc	12954	D22GS1D15M
C34	1-900098-017	Capacitor, fixed, mica, 30 pF, ±5%, 300 Vdc	04062	DM5 EC300D
C35	1-900077-002	Capacitor, fixed, ceramic, 0.01μF, ±20%, 100 Vdc	56289	TG-S10
C36	1-900001-013	Capacitor, fixed, plastic, 0.1μF, ±20%, 250 Vdc	73445	C280AE, 0.1μF
C37	1-900115-005	Capacitor, fixed, tantalum, 2.2μF, ±20%, 15 Vdc	12954	D2R2GS1D15M
C38	1-900115-006	Capacitor, fixed, tantalum, 22μF, ±20%, 15 Vdc	12954	D22GS1D15M
C39	1-900077-002	Capacitor, fixed, ceramic, 0.01μF, ±20%, 100 Vdc	56289	TG-S10
C40	1-900115-005	Capacitor, fixed, tantalum, 2.2μF, ±20%, 15 Vdc	12954	D2R2GS1D15M
C41	1-900001-013	Capacitor, fixed, plastic, 0.1μF, ±20%, 250 Vdc	73445	C280AE, 0.1μF
C42	1-900001-013	Capacitor, fixed, tantalum, 0.1μF, ±20%, 250 Vdc	73445	C280AE, 0.1μF
C43	1-900079-002	Capacitor, fixed, feed-thru, 470 pF, ±20%, 300 Vdc	01121	FW5N-471
C44	1-900098-001	Capacitor, fixed, mica, 1 pF, ±0.5 pF, 300 Vdc	04062	DM5 CC010D
C45	1-900104-002	Capacitor, fixed, ceramic, 0.1μF, ±20%, 50 Vdc	16508	3419-050E-104M
C46	1-900104-002	Capacitor, fixed, ceramic, 0.1μF, ±20%, 50 Vdc	16508	3419-050E-104M
C47	1-900104-002	Capacitor, fixed, ceramic, 0.1μF, ±20%, 50 Vdc	16508	3419-050E-104M
C48	1-900104-002	Capacitor, fixed, ceramic, 0.1μF, ±20%, 50 Vdc	16508	3419-050E-104M
CR1	1-913091-001	Diode, silicon, Vr = 5 V, If = 10 mA	28480	5082-2835

Table 8-35. Parts List for Final Broadband Amplifier Assembly, A5A10 (Cont.)

Ref. Desig.	Singer Part No.	Description	Mfr. Code No.	Mfr. Part No.
CR2	1-913005-001	Diode, germanium, Vr=30 V, If=100 mA	03877	1N273
CR3	1-913005-001	Diode, germanium, Vr=30 V, If=100 mA	03877	1N273
CR4	1-913091-001	Diode, silicon, Vr=5 V, If=10 mA	28480	5082-2835
FL1	1-404026-001	Filter, low pass, 50 KHz to 525 MHz	88869	
J1	1-950031-003	Connector, jack, 1 pin	71279	2-332070-5
J2	1-950031-003	Connector, jac, 3 pins	7129	2-332070-5
J3	1-950031-003	Connector, jack, 1 pin	71279	2-332070-5
J4	1-950031-003	Connector, jack, 3 pins	71279	2-332070-5
J5	1-950031-003	Connector, jack, 3 pins	71279	2-332070-5
J6	1-950031-003	Connector, jack, 1 pin	71279	2-332070-5
J7	1-950031-003	Connector, jack, 1 pin	71279	2-332070-5
J8	1-950031-003	Connector, jack, 1 pin	71279	2-332070-5
J9	1-950031-003	Connector, jack, 1 pin	71279	2-332070-5
L1		Not used		
L2		Not used		
L3		Not used		
L4		Not used		
L5	1-404008-004	Inductor, fixed, 4 turns	88869	
L6	1-404008-004	Inductor, fixed, 4 turns	88869	
L7		Not Used		
L8		Not Used		
L9	1-906016-049	Inductor, fixed, 1000μH, 139 mA	24759	DR-1000
L10	1-906016-049	Inductor, fixed, 1000μH, 139 mA	24759	DR-1000
L11	132-0377-001	Inductor, fixed, 7 turns	88869	
L12	1-906016-049	Inductor, fixed, 1000μH, 139 mA	24759	DR-1000
L13	1-906043-025	Inductor, fixed, 10μH, ±10%, 290 mA	81564	4025
L14	1-906043-025	Inductor, fixed, 10μH, ±10%, 290 mA	81564	4025
L15	132-0377-001	Inductor, fixed, 7 turns	88869	
Q1	1-958099-001	Transistor, silicon, NPN	25403	BFR91
Q2	1-958000-002	Transistor, silicon, PNP	04713	2N3906-5
Q3	1-958099-001	Transistor, silicon, NPN	25403	BFR91

Table 8-35. Parts List for Final Broadband Amplifier Assembly, A5A10 (Cont.)

Ref. Desig.	Singer Part No.	Description	Mfr. Code No.	Mfr. Part No.
Q4	1-958000-002	Transistor, silicon, PNP	04713	2N3906-5
Q5	1-958099-001	Transistor, silicon, NPN	25403	BFR91
Q6	1-958000-002	Transistor, silicon, NPN	04713	2N3906-5
Q7	1-958100-001	Transistor, silicon, NPN	25403	BFR96
Q8	1-958000-002	Transistor, silicon, PNP	04713	2N3906-5
Q9	1-958000-001	Transistor, silicon, NPN	04713	2N3904-5
Q10	1-958000-001	Transistor, silicon, NPN	04713	2N3904-5
R1		Not used		
R2		Not used		
R3		Not used		
R4	1-945000-149	Resistor, fixed, composition, 300 ohm, ±5%, 1/4 W	01121	CB3015
R5	1-945000-120	Resistor, fixed, composition, 18 ohm, ±5%, 1/4 W	01121	CB1805
R6	1-945000-149	Resistor, fixed, composition, 300 ohm, ±5%, 1/4 W	01121	CB3016
R7	1-945000-148	Resistor, fixed, composition, 270 ohm, ±5%, 1/4 W	01121	CB2715
R8	1-945000-176	Resistor, fixed, composition, 3.9 kilohm, ±5%, 1/4 W	01121	CB3925
R9	1-945000-174	Resistor, fixed, composition, 3.3 kilohm, ±5%, 1/4 W	01121	CB3325
R10	1-945000-165	Resistor, fixed, composition, 1.3 kilohm, ±5%, 1/4 W	01121	CB1325
R11	1-945000-131	Resistor, fixed, composition, 51 ohm, ±5%, 1/4 W	01121	CB5105
R12	1-945000-142	Resistor, fixed, composition, 150 ohm, ±5%, 1/4 W	01121	CB1515
R13	1-945000-134	Resistor, fixed, composition, 68 ohm, ±5%, 1/4 W	01121	CB6805
R14	1-945000-176	Resistor, fixed, composition, 3.9 kilohm, ±5%, 1/4 W	01121	CB3925
R15	1-945000-174	Resistor, fixed, composition, 3.3 kilohm, ±5%, 1/4 W	01121	CB3325
R16	1-945000-165	Resistor, fixed, composition, 1.3 kilohm, ±5%, 1/4 W	01121	CB1325
R17	1-945000-134	Resistor, fixed, composition, 68 ohm, ±5%, 1/4 W	01121	CB6805
R18	1-945000-131	Resistor, fixed, composition, 51 ohm, ±5%, 1/4 W	01121	CB5105
R19	1-945000-142	Resistor, fixed, composition, 150 ohm, ±5%, 1/4 W	01121	CB1515
R20	1-945000-148	Resistor, fixed, composition, 270 ohm, ±5%, 1/4 W	01121	CB2715

Table 8-35. Parts List for Final Broadband Amplifier Assembly, A5A10 (Cont.)

Ref. Desig.	Singer Part No.	Description	Mfr. Code No.	Mfr. Part No.
R21	1-945000-176	Resistor, fixed, composition, 3.9 kilohm, ±5%, 1/4 W	01121	CB3925
R22	1-945000-174	Resistor, fixed, composition, 3.3 kilohm, ±5%, 1/4 W	01121	CB3325
R23	1-945000-165	Resistor, fixed, composition, 1.3 kilohm, ±5%, 1/4 W	01121	CB1325
R24	1-945000-134	Resistor, fixed, composition, 68 ohm, ±5%, 1/4 W	01121	CB6805
R25	1-945000-135	Resistor, fixed, composition, 75 ohm, ±5%, 1/4 W	01121	CB7505
R26	1-945000-148	Resistor, fixed, composition, 270 ohm, ±5%, 1/4 W	01121	CB2715
R27	1-945000-175	Resistor, fixed, composition, 3.6 kilohm, ±5%, 1/4 W	01121	CB3625
R28	1-945000-174	Resistor, fixed, composition, 3.3 kilohm, ±5%, 1/4 W	01121	CB3325
R29	1-945000-165	Resistor, fixed, composition, 1.3 kilohm, ±5%, 1/4 W	01121	CB1325
R30		Not Used		
R31	1-945000-125	Resistor, fixed, composition, 30 ohm, ±5%, 1/4 W	01121	CB3005
R32	1-945000-154	Resistor, fixed, composition, 470 ohm, ±5%, 1/4 W	01121	CB4715
R33	1-945000-186	Resistor, fixed, composition, 10 kilohm, ±5%, 1/4 W	01121	CB1035
R34	1-945000-169	Resistor, fixed, composition, 2 kilohm, ±5%, 1/4 W	01121	CB2025
R35	1-945000-162	Resistor, fixed, composition, 1 kilohm, ±5%, 1/4 W	01121	CB1025
R36	1-945000-178	Resistor, fixed, composition, 4.7 kilohm, ±5%, 1/4 W	01121	CB4725
R37	1-945027-385	Resistor, fixed, film, 100 kilohm, ±1%, 1/8 W	14674	RN55D1003F
R38	1-945027-273	Resistor, fixed, film, 6.81 kilohm, ±1%, 1/8 W	14674	RN55D6811F
R39	1-945162-008	Resistor, variable, cermet, 2 kilohm, ±20%, 1/2 W	01121	E2A202
R40	1-945027-246	Resistor, fixed, film, 3.57 kilohm, ±1%, 1/8 W	14674	RN55D3571F
R41	1-945000-214	Resistor, fixed, composition, 150 kilohm, ±5%, 1/4 W	01121	CB1545
R42	1-945162-014	Resistor, variable, cermet, 200 kilohm, ±20%, 1/2 W	01121	E2A204
R43	1-945027-186	Resistor, fixed, film, 845 ohm, ±1%, 1/8 W	14674	RN55D8450F
R44	1-945027-385	Resistor, fixed, film, 100 kilohm, ±1%, 1/8 W	14674	RN55D1003F
R45	1-945027-273	Resistor, fixed, film, 6.81 kilohm, ±1%, 1/8 W	14674	RN55D6811F

Table 8-35. Parts List for Final Broadband Amplifier Assembly, A5A10 (Cont.)

Ref. Desig.	Singer Part No.	Description	Mfr. Code No.	Mfr. Part No.
R46	1-945000-258	Resistor, fixed, composition, 10 megohm, ±5%, 1/4 W	01121	CB1065
R47	1-945000-169	Resistor, fixed, composition, 2 kilohm, ±5%, 1/4 W	01121	CB2025
R48	1-945000-177	Resistor, fixed, composition, 4.3 kilohm, ±5%, 1/4 W	01121	CB4325
R49	1-945000-155	Resistor, fixed, composition, 510 ohm, ±5%, 1/4 W	01121	CB5115
R50	1-945000-186	Resistor, fixed, composition, 10 kilohm, ±5%, 1/4 W	01121	CB1035
R51	1-945000-131	Resistor, fixed, composition, 51 ohm, ±5%, 1/4 W	01121	CB5105
R52		Not Used		
R53		Not Used		
R54	1-945000-122	Resistor, fixed, composition, 22 ohm, ±5%, 1/4 W	01121	CB2205
R55	1-945000-122	Resistor, fixed, composition, 22 ohm, ±5%, 1/4 W	01121	CB2205
R56	1-945000-148	Resistor, fixed, composition, 270 ohm, ±5%, 1/4 W	01121	CB2715
R57	1-945000-138	Resistor, fixed, composition, 100 ohm, ±5%, 1/4 W	01121	CB1015
R58	1-945000-125	Resistor, fixed, composition, 30 ohm, ±5%, 1/4 W	01121	CB3005
U1	1-926100-001	Integrated circuit, amplifier	27014	LM301AN

Table 8-36. Parts List for Mother Board Assembly, A6

Ref. Desig.	Singer Part No.	Description	Mfr. Code No.	Mfr. Part No.
A6A1	4-005193-001	Assembly, Measure IF/AF	88869	
A6A2	4-005194-001	Assembly, Vertical Amplifier	88869	
A6A3	4-005195-001	Assembly, Horizontal Amplifier	88869	
A6A4	4-005196-001	Assembly, Audio Oscillator	88869	
J1	1-403946-001	Connector, jack, 10 pin	88869	
J2	1-403946-001	Connector, jack, 10 pin	88869	
J3	1-403946-001	Connector, jack, 10 pin	88869	
J4	1-403946-001	Connector, jack, 10 pin	88869	
J5	556-205-001	Connector, jack, SMB	98291	51-051-000
J6	1-910029-002	Connector, jack, 1 pin	00779	61182-2
J7	1-910029-002	Connector, jack, 1 pin	00779	61182-2
J8	1-910029-002	Connector, jack, 1 pin	00779	61182-2
J9	1-910029-002	Connector, jack, 1 pin	00779	61182-2
J10	1-910029-002	Connector, jack, 1 pin	00779	61182-2
J11	1-910029-002	Connector, jack, 1 pin	00779	61182-2
J12	1-910029-002	Connector, jack, 1 pin	00779	61182-2
J13	1-910029-002	Connector, jack, 1 pin	00779	61182-2
J14	1-910029-002	Connector, jack, 1 pin	00779	61182-2
J15	1-910029-002	Connector, jack, 1 pin	00779	61182-2
J16	1-910029-002	Connector, jack, 1 pin	00779	61182-2
J17	556-205-001	Connector, jack, SMB	98291	51-051-000
J18	556-205-001	Connector, jack, SMB	98291	51-051-000
R1	1-945162-013	Resistor, variable, cermet, 100 kilohm, ±20%, 1/2 W	01121	E2A104
R2	1-945000-154	Resistor, fixed, composition, 470 ohm, ±5%, 1/4 W	01121	CB4715
W1	2-005353-001	Cable assembly, coaxial, 3.2 in.	88869	
W2	2-005353-002	Cable assembly, coaxial, 5 in.	88869	
W3	2-005353-003	Cable assembly, coaxial, 6.4 in.	88869	
XA6A1J1	1-403946-001	Connector, jack, 5 pin	88869	
XA6A1J2	1-403946-001	Connector, jack, 5 pin	88869	
XA6A1J3	1-403946-001	Connector, jack, 1 pin	88869	
XA6A1J4	1-403946-001	Connector, jack, 1 pin	88869	
XA6A1J5	1-403946-001	Connector, jack, 1 pin	88869	
XA6A1J6	1-403946-001	Connector, jack, 1 pin	88869	
XA6A1J7	1-403946-001	Connector, jack, 1 pin	88869	
XA6A1J8	1-403946-001	Connector, jack, 5 pin	88869	
XA6A1J9	1-403946-001	Connector, jack, 5 pin	88869	
XA6A1J10	1-403946-001	Connector, jack, 5 pin	88869	
XA6A1J11	1-403946-001	Connector, jack, 5 pin	88869	
XA6A1J12	1-403946-001	Connector, jack, 1 pin	88869	
XA6A1J13	1-403946-001	Connector, jack, 1 pin	88869	

Table 8-36. Parts List for Mother Board Assembly, A6 (Cont.)

Ref. Desig.	Singer Part No.	Description	Mfr. Code No.	Mfr. Part No.
XA6A1J14	1-403946-001	Connector, jack, 1 pin	88869	
XA6A1J15	1-403946-001	Connector, jack, 1 pin	88869	
XA6A1J16	1-403946-001	Connector, jack, 1 pin	88869	
XA6A2J1	1-403946-001	Connector, jack, 1 pin	88869	
XA6A2J2		Not Used		
XA6A2J3	1-403946-001	Connector, jack, 1 pin	88869	
XA6A2J4	1-403946-001	Connector, jack, 1 pin	88869	
XA6A2J5	1-403946-001	Connector, jack, 5 pin	88869	
XA6A2J6	1-403946-001	Connector, jack, 1 pin	88869	
XA6A2J7		Not Used		
XA6A2J8		Not Used		
XA6A2J9	1-403946-001	Connector, jack, 1 pin	88869	
XA6A3J1	1-403946-001	Connector, jack, 1 pin	88869	
XA6A3J2	1-403946-001	Connector, jack, 1 pin	88869	
XA6A3J3	1-403946-001	Connector, jack, 1 pin	88869	
XA6A3J4	1-403946-001	Connector, jack, 1 pin	88869	
XA6A3J5	1-403946-001	Connector, jack, 1 pin	88869	
XA6A3J6	1-403946-001	Connector, jack, 1 pin	88869	
XA6A3J7	1-403946-001	Connector, jack, 5 pin	88869	
XA6A3J8	1-403946-001	Connector, jack, 5 pin	88869	
XA6A3J9	1-403946-001	Connector, jack, 5 pin	88869	
XA6A3J10	1-403946-001	Connector, jack, 5 pin	88869	
XA6A3J11	1-403946-001	Connector, jack, 1 pin	88869	
XA6A3J12	1-403946-001	Connector, jack, 5 pin	88869	
XA6A3J13		Not Used		
XA6A3J14	1-403946-001	Not Used		
XA6A3J15	1-403946-001	Connector, jack, 1 pin	88869	
XA6A4J1	1-403946-001	Connector, jack, 1 pin	88869	
XA6A4J2	1-403946-001	Connector, jack, 1 pin	88869	
XA6A4J3	1-403946-001	Connector, jack, 5 pin	88869	
XA6A4J4	1-403946-001	Connector, jack, 1 pin	88869	
XA6A4J5	1-403946-001	Connector, jack, 1 pin	88869	

Table 8-37. Parts List for Measure IF/AF Assembly, A6A1

Ref. Desig.	Singer Part No.	Description	Mfr. Code No.	Mfr. Part No.
C1	1-900077-002	Capacitor, fixed, ceramic, 0.01μF, ±20%, 100 Vdc	56289	TG-S10
C2	1-900001-013	Capacitor, fixed, plastic, 0.1μF, ±20%, 250 Vdc	73445	C280AE, 0.1μF
C3	1-900077-002	Capacitor, fixed, ceramic, 0.01μF, ±20%, 100 Vdc	56289	TG-S10
C4	1-900077-002	Capacitor, fixed, ceramic, 0.01μF, ±20%, 100 Vdc	56289	TG-S10
C5	1-900077-002	Capacitor, fixed, ceramic, 0.01μF, ±20%, 100 Vdc	56289	TG-S10
C6	1-900077-002	Capacitor, fixed, ceramic, 0.01μF, ±20%, 100 Vdc	56289	TG-S10
C7	1-900001-013	Capacitor, fixed, plastic, 0.1μF, ±20%, 250 Vdc	73445	C280AE, 0.1μF
C8	1-900077-002	Capacitor, fixed, ceramic, 0.01μF, ±20%, 100 Vdc	56289	TG-S10
C9	1-900001-013	Capacitor, fixed, plastic, 0.1μF, ±20%, 250 Vdc	73445	C280AE, 0.1μF
C10	1-900077-002	Capacitor, fixed, ceramic, 0.01μF, ±20%, 100 Vdc	56289	TG-S10
C11	1-900077-002	Capacitor, fixed, ceramic, 0.01μF, ±20%, 100 Vdc	56289	TG-S10
C12	1-900077-002	Capacitor, fixed, ceramic, 0.01μF, ±20%, 100 Vdc	56289	TG-S10
C13	1-900077-002	Capacitor, fixed, ceramic, 0.01μF, ±20%, 100 Vdc	56289	TG-S10
C14	1-900077-002	Capacitor, fixed, ceramic, 0.01μF, ±20%, 100 Vdc	56289	TG-S10
C15	1-900077-002	Capacitor, fixed, ceramic, 0.01μF, ±20%, 100 Vdc	56289	TG-S10
C16	1-900098-031	Capacitor, fixed, mica, 100 pF, ±5%, 300 Vdc	04062	DM5 FC101J
C17	1-900115-010	Capacitor, fixed, tantalum, 150μF, ±20%, 15 Vdc	12954	D150GS1D15M
C18	1-900077-002	Capacitor, fixed, ceramic, 0.01μF, ±20%, 100 Vdc	56289	TG-S10
C19	1-900077-002	Capacitor, fixed, ceramic, 0.01μF, ±20%, 100 Vdc	56289	TG-S10
C20	1-900077-002	Capacitor, fixed, ceramic, 0.01μF, ±20%, 100 Vdc	56289	TG-S10
C21	1-900001-013	Capacitor, fixed, plastic, 0.1μF, ±20%, 250 Vdc	73445	C280AE, 0.1μF
C22	1-900077-002	Capacitor, fixed, ceramic, 0.01μF, ±20%, 100 Vdc	56289	TG-S10
C23	1-900001-013	Capacitor, fixed, plastic, 0.1μF, ±20%, 250 Vdc	73445	C280AE, 0.1μF
C24	1-900077-002	Capacitor, fixed, ceramic, 0.01μF, ±20%, 100 Vdc	56289	TG-S10

Table 8-37. Parts List for Measure IF/AF Assembly, A6A1 (Cont.)

Ref. Desig.	Singer Part No.	Description	Mfr. Code No.	Mfr. Part No.
C25	1-900077-002	Capacitor, fixed, ceramic, 0.01μF, ±20%, 100 Vdc	56289	TG-S10
C26	1-900001-013	Capacitor, fixed, plastic, 0.1μF, ±20%, 250 Vdc	73445	C280AE, 0.1μF
C27	1-900001-013	Capacitor, fixed, plastic, 0.1μF, ±20%, 250 Vdc	73445	C280AE, 0.1μF
C28	1-900001-013	Capacitor, fixed, plastic, 0.1μF, ±20%, 250 Vdc	73445	C280AE, 0.1μF
C29	1-900001-013	Capacitor, fixed, plastic, 0.1μF, ±20%, 250 Vdc	73445	C280AE, 0.1μF
C30	1-900098-036	Capacitor, fixed, mica, 160 pF, ±5%, 100 Vdc	04062	DM5FA161J
C31	1-900098-036	Capacitor, fixed, mica, 160 pF, ±5%, 100 Vdc	04062	DM5FA161J
C32	1-900098-036	Capacitor, fixed, mica, 160 pF, ±5%, 100 Vdc	04062	DM5FA161J
C33	1-900001-013	Capacitor, fixed, plastic, 0.1μF, ±20%, 250 Vdc	73445	C280AE, 0.1μF
C34	1-900077-002	Capacitor, fixed, ceramic 0.01μF, ±20%, 100 Vdc	56289	TG-S10
C35	1-900077-002	Capacitor, fixed, ceramic, 0.01μF, ±20%, 100 Vdc	56289	TG-S10
C36	1-900001-013	Capacitor, fixed, plastic, 0.1μF, ±20%, 250 Vdc	73445	C280AE, 0.1μF
C37	1-900077-002	Capacitor, fixed, ceramic, 0.01μF, ±20%, 100 Vdc	56289	TG-S10
C38	1-900001-013	Capacitor, fixed, plastic, 0.1μF, ±20%, 250 Vdc	73445	C280AE, 0.1μF
C39	1-900115-007	Capacitor, fixed, tantalum, 10μF, ±20%, 20 Vdc	12954	D10GS1D20M
C40	1-900001-013	Capacitor, fixed, plastic, 0.1μF, ±20%, 250 Vdc	73445	C280AE, 0.1μF
C41	1-900098-038	Capacitor, fixed, mica, 200 pF, ±5%, 100 Vdc	04062	DM5FA201J
C42	1-900077-002	Capacitor, fixed, ceramic, 0.01μF, ±20%, 100 Vdc	56289	TG-S10
C43	1-900077-002	Capacitor, fixed, ceramic, 0.01μF, ±20%, 100 Vdc	56289	TG-S10
C44	1-900072-041	Capacitor, fixed, mica, 1000 pF, ±5%, 100 Vdc	00853	D10S1D102J0
C45	1-900077-002	Capacitor, fixed, ceramic, 0.01μF, ±20%, 100 Vdc	56289	TG-S10
C46	1-900077-002	Capacitor, fixed, ceramic, 0.01μF, ±20%, 100 Vdc	56289	TG-S10
C47	1-900001-013	Capacitor, fixed, plastic, 0.1μF, ±20%, 250 Vdc	73445	C280AE, 0.1μF
C48	1-900115-010	Capacitor, fixed, tantalum, 150μF, ±20%, 15 Vdc	12954	D150GS1D15M

Table 8-37. Parts List for Measure IF/AF Assembly, A6A1 (Cont.)

Ref. Desig.	Singer Part No.	Description	Mfr. Code No.	Mfr. Part No.
C49	1-900077-002	Capacitor, fixed, ceramic, 0.01μF, ±20%, 100 Vdc	56289	TG-S10
C50	1-900098-042	Capacitor, fixed, mica, 300 pF, ±5%, 50 Vdc	04062	DM5FY301J
C51	1-900098-023	Capacitor, fixed, mica, 50 pF, ±5%, 300 Vdc	04062	DM5EC500J
C52	1-900115-003	Capacitor, fixed, tantalum, 1μF, ±20%, 50 Vdc	12954	D1R0GS1D50M
C53	1-900098-042	Capacitor, fixed, mica, 300 pF, ±5%, 50 Vdc	04062	DM5FY301J
C54	1-900001-013	Capacitor, fixed, tantalum, 0.1μF, ±20%, 250 Vdc	12954	C280AE, 0.1μF
C55	1-900115-010	Capacitor, fixed, tantalum, 150μF, ±20%, 15 Vdc	12954	D150GS1D15M
C56	1-900001-013	Capacitor, fixed, plastic, 0.1μF, ±20%, 250 Vdc	73445	C280AE, 0.1μF
C57	1-900115-007	Capacitor, fixed, tantalum, 10μF, ±20%, 20 Vdc	12954	D10GS1D20M
C58	1-900115-007	Capacitor, fixed, tantalum, 10μF, ±20%, 20 Vdc	12954	D10GS1D20M
C59	1-900098-035	Capacitor, fixed, mica, 150 pF, ±5%, 100 Vdc	04062	DM5FA151J
C60	1-900098-017	Capacitor, fixed, mica, 30 pF, ±5%, 300 Vdc	04062	DM5EC300J
C61	1-900077-002	Capacitor, fixed, ceramic, 0.01μF, ±20%, 100 Vdc	56289	TG-S10
C62	1-900077-002	Capacitor, fixed, ceramic, 0.01μF, ±20%, 100 Vdc	56289	TG-S10
C63	1-900115-006	Capacitor, fixed, tantalum, 22μF, ±20%, 15 Vdc	12954	D22GS1D15M
C64	1-900115-005	Capacitor, fixed, tantalum, 2.2μF, ±20%, 15 Vdc	12954	D2R2GS1D15M
C65	1-900115-005	Capacitor, fixed, tantalum, 2.2μF, ±20%, 15 Vdc	12954	D2R2GS1D15M
C66	1-900115-005	Capacitor, fixed, tantalum, 2.2μF, ±20%, 15 Vdc	12954	D2R2GS1D15M
C67	1-900077-002	Capacitor, fixed, ceramic, 0.01μF, ±20%, 100 Vdc	56289	TG-S10
C68	1-900001-013	Capacitor, fixed, plastic, 0.1μF, ±20%, 250 Vdc	73445	C280AE, 0.1μF
C69	1-900077-002	Capacitor, fixed, ceramic, 0.01μF, ±20%, 100 Vdc	56289	TG-S10
C70	1-900077-002	Capacitor, fixed, ceramic, 0.01μF, ±20%, 100 Vdc	56289	TG-S10
C71	1-900077-002	Capacitor, fixed, ceramic, 0.01μF, ±20%, 100 Vdc	56289	TG-S10
C72	1-900077-002	Capacitor, fixed, ceramic, 0.01μF, ±20%, 100 Vdc	56289	TG-S10

Table 8-37. Parts List for Measure IF/AF Assembly, A6A1 (Cont.)

Ref. Desig.	Singer Part No.	Description	Mfr. Code No.	Mfr. Part No.
C73	1-900077-002	Capacitor, fixed, ceramic, 0.01μF, ±20%, 100 Vdc	56289	TG-S10
C74	1-900077-002	Capacitor, fixed, ceramic, 0.01μF, ±20%, 100 Vdc	56289	TG-S10
C75	1-900077-002	Capacitor, fixed, ceramic, 0.01μF, ±20%, 100 Vdc	56289	TG-S10
C76	1-900001-013	Capacitor, fixed, plastic, 0.1μF, ±20%, 250 Vdc	73445	C280AE, 0.1μF
C77	1-900115-010	Capacitor, fixed, tantalum, 150μF, ±20%, 15 Vdc	12954	D150GS1D15M
C78	1-900001-013	Capacitor, fixed, plastic, 0.1μF, ±20%, 250 Vdc	73445	C280AE, 0.1μF
C79	1-900001-013	Capacitor, fixed, plastic, 0.1μF, ±20%, 250 Vdc	73445	C280AE, 0.1μF
C80	1-900001-013	Capacitor, fixed, plastic, 0.1μF, ±20%, 250 Vdc	73445	C280AE, 0.1μF
C81	1-900001-013	Capacitor, fixed, plastic, 0.1μF, ±20%, 250 Vdc	73445	C280AE, 0.1μF
C82	1-900077-002	Capacitor, fixed, ceramic, 0.01μF, ±20%, 100 Vdc	56289	TG-S10
C83	1-900115-006	Capacitor, fixed, tantalum, 22μF, ±20%, 15 Vdc	12954	D10GS1D20M
C84	1-900115-006	Capacitor, fixed, tantalum, 22μF, ±20%, 15 Vdc	12954	D10GS1D20M
C85	1-900098-017	Capacitor, fixed, mica, 30 pF, ±5%, 300 Vdc	04062	DM5EC300J
C86	1-900077-002	Capacitor, fixed, ceramic, 0.01μF, ±20%, 100 Vdc	56289	TG-S10
C87	1-900115-010	Capacitor, fixed, tantalum, 150μF, ±20%, 15 Vdc	12954	D150GS1D15M
C88	1-900115-006	Capacitor, fixed, tantalum, 22μF, ±20%, 15 Vdc	12954	D22GS1D15M
C89	1-900077-002	Capacitor, fixed, ceramic, 0.01μF, ±20%, 100 Vdc	56289	TG-S10
C90	1-900115-007	Capacitor, fixed, tantalum, 10μF, ±20%, 20 Vdc	12954	D10GS1D20M
C91	1-900001-013	Capacitor, fixed, plastic, 0.1μF, ±20%, 250 Vdc	73445	C280AE, 0.1μF
C92	1-900039-002	Capacitor, fixed, electrolytic, 200/220μF, +75%-10%, 15 Vdc	09023	NLW-200-16
C93	1-900001-121	Capacitor, fixed, plastic, 0.47μF, ±10%, 250 Vdc	73445	C280AE, 0.47μF
C94	1-900001-013	Capacitor, fixed, plastic, 0.1μF, ±20%, 250 Vdc	73445	C280AE, 0.1μF
C95	1-900098-029	Capacitor, fixed, mica, 82 pF, ±5%, 300 Vdc	04062	DM5EC820J
C96	1-900072-041	Capacitor, fixed, mica, 1000 pF, ±5%, 100 Vdc	00853	D10S1D102J0

Table 8-37. Parts List for Measure IF/AF Assembly, A6A1 (Cont.)

Ref. Desig.	Singer Part No.	Description	Mfr. Code No.	Mfr. Part No.
C97	1-900039-002	Capacitor, fixed, electrolytic, 200/220μF, +75%-10%, 15 Vdc	09023	NLW-200-16
C98	1-900115-006	Capacitor, fixed, tantalum, 22μF, ±20%, 15 Vdc	12954	D22GS1D15M
C99	1-900039-002	Capacitor, fixed, electrolytic, 200/220μF, +75%-10%, 15 Vdc	09023	NLW-200-16
C100	1-900077-002	Capacitor, fixed, ceramic, 0.01μF, ±20%, 100 Vdc	56289	TG-S10
C101	1-900077-002	Capacitor, fixed, ceramic, 0.01μF, ±20%, 100 Vdc	56289	TG-S10
CR1	1-913085-001	Diode, silicon, Vr = 75 V, If = 20 mA	50273	1N3062
CR2	1-913085-001	Diode, silicon, Vr = 75 V, If = 20 mA	50273	1N3062
CR3	1-913085-001	Diode, silicon, Vr = 75 V, If = 20 mA	50273	1N3062
CR4	1-913085-001	Diode, silicon, Vr = 75 V, If = 20 mA	50273	1N3062
CR5	1-913085-001	Diode, silicon Vr = 75 V, If = 20 mA	50273	1N3062
CR6	1-913085-001	Diode, silicon, Vr = 75 V, If = 20 mA	50273	1N3062
CR7	1-913085-001	Diode, silicon, Vr = 75 V, If = 20 mA	50273	1N3062
CR8	1-913085-001	Diode, silicon, Vr = 75 V, If = 20 mA	50273	1N3062
CR9	1-913085-001	Diode, silicon, Vr = 75 V, If = 20 mA	50273	1N3062
CR10	1-913085-001	Diode, silicon, Vr = 75 V, If = 20 mA	50273	1N3062
CR11	1-913085-001	Diode, silicon, Vr = 75 V, If = 20 mA	50273	1N3062
CR12	1-913085-001	Diode, silicon, Vr = 75 V, If = 20 mA	50273	1N3062
CR13	1-913085-001	Diode, silicon, Vr = 75 V, If = 20 mA	50273	1N3062
CR14	1-913085-001	Diode, silicon, Vr = 75 V, If = 20 mA	50273	1N3062
CR15	1-913085-001	Diode, silicon, Vr = 75 V, If = 20 mA	50273	1N3062
FL1	1-403279-001	Filter, crystal, 11 MHz 1 kHz	88869	
FL2	1-906013-001	Ferrite Bead	02114	5659065/4B
J1	1-950031-003	Connector, jack, 3 pins	00779	2-332070-5
J2	1-950031-003	Connector, jack, 3 pins	00779	2-332070-5
J3	1-950031-003	Connector, jack, 1 pin	00779	2-332070-5
J4	1-950031-003	Connector, jack, 1 pin	00779	2-332070-5
J5	1-950031-003	Connector, jack, 1 pin	00779	2-332070-5
J6	1-950031-003	Connector, jack, 1 pin	00779	2-332070-5

Table 8-37. Parts List for Measure IF/AF Assembly, A6A1 (Cont.)

Ref. Desig.	Singer Part No.	Description	Mfr. Code No.	Mfr. Part No.
J7	1-950031-003	Connector, jack, 1 pin	00779	2-332070-5
J8	1-950031-003	Connector, jack, 3 pins	00779	2-332070-5
J9	1-950031-003	Connector, jack, 3 pins	00779	2-332070-5
J10	1-950031-003	Connector, jack, 3 pins	00779	2-332070-5
J11	1-950031-003	Connector, jack, 3 pins	00779	2-332070-5
J12	1-950031-003	Connector, jack, 1 pin	00779	2-332070-5
J13	1-950031-003	Connector, jack, 1 pin	00779	2-332070-5
J14	1-950031-003	Connector, jack, 1 pin	00779	2-332070-5
J15	1-950031-003	Connector, jack, 1 pin	00779	2-332070-5
J16	1-950031-003	Connector, jack, 1 pin	00779	2-332070-5
L1	1-906043-037	Inductor, fixed, 100μH, ±10%, 145 mA	81564	4037
L2	1-906043-037	Inductor, fixed, 100μH, ±10%, 145 mA	81564	4037
L3	1-906043-033	Inductor, fixed, 47μH, ±10%, 195 mA	81564	4033
L4	1-906043-053	Inductor, fixed, 2200μH, ±10%, 44 mA	81564	4053
Q1	1-958000-002	Transistor, silicon, PNP	04713	2N3906-5
Q2	1-958000-001	Transistor, silicon, NPN	04713	2N3904-5
Q3	1-958000-002	Transistor, silicon, PNP	04713	2N3906-5
Q4	1-958000-002	Transistor, silicon, PNP	04713	2N3906-5
Q5	1-958000-001	Transistor, silicon, NPN	04713	2N3904-5
Q6	1-958000-002	Transistor, silicon, PNP	04713	2N3906-5
Q7	1-958000-001	Transistor, silicon, NPN	04713	2N3904-5
Q8	1-958000-001	Transistor, silicon, NPN	04713	2N3904-5
Q9	1-958000-001	Transistor, silicon, NPN	04713	2N3904-5
Q10	1-958000-001	Transistor, silicon, NPN	04713	2N3904-5
Q11	1-958000-001	Transistor, silicon, NPN	04713	2N3904-5
Q12	1-958000-002	Transistor, silicon, PNP	04713	2N3906-5
Q13	1-958000-002	Transistor, silicon, PNP	04713	2N3906-5
Q14	1-958000-001	Transistor, silicon, NPN	04713	2N3904-5
Q15	1-958000-002	Transistor, silicon, PNP	04713	2N3906-5
Q16	1-958000-001	Transistor, silicon, NPN	04713	2N3904-5
Q17	1-958000-001	Transistor, silicon, NPN	04713	2N3904-5
Q18	1-958000-002	Transistor, silicon, PNP	04713	2N3906-5
Q19	1-958000-002	Transistor, silicon, PNP	04713	2N3906-5
Q20	1-958000-001	Transistor, silicon, NPN	04713	2N3904-5
R1	1-945000-169	Resistor, fixed, composition, 2 kilohm, ±5%, 1/4 W	01121	CB2025
R2	1-945162-004	Resistor, variable, cermet 100 ohm, ±20%, 1/2 W	01121	E2A101
R3		Not Used		

Table 8-37. Parts List for Measure IF/AF Assembly, A6A1 (Cont.)

Ref. Desig.	Singer Part No.	Description	Mfr. Code No.	Mfr. Part No.
R4	1-945000-037	Resistor, fixed, composition, 1 kilohm, ±10%, 1/4 W	01121	CB1021
R5	1-945000-043	Resistor, fixed, composition, 3.3 kilohm, ±10%, 1/4 W	01121	CB3321
R6	1-945000-181	Resistor, fixed, composition, 6.2 kilohm, ±5%, 1/4 W	01121	CB6225
R7	1-945000-025	Resistor, fixed, composition, 100 ohm, ±10%, 1/4 W	01121	CB1011
R8	1-945000-037	Resistor, fixed, composition, 1 kilohm, ±10%, 1/4 W	01121	CB1021
R9	1-945000-013	Resistor, fixed, composition, 10 ohm, ±10%, 1/4 W	01121	CB1001
R10	1-945000-169	Resistor, fixed, composition, 2 kilohm, ±5%, 1/4 W	01121	CB2025
R11	1-945000-044	Resistor, fixed, composition, 3.9 kilohm, ±10%, 1/4 W	01121	CB3921
R12	1-945000-025	Resistor, fixed, composition, 100 ohm, ±10%, 1/4 W	01121	CB1011
R13	1-945000-037	Resistor, fixed, composition, 1 kilohm, ±10%, 1/4 W	01121	CR1021
R14	1-945000-022	Resistor, fixed, composition, 100 ohm, ±10%, 1/4 W	01121	CB1011
R15	1-945000-043	Resistor, fixed, composition, 3.3 kilohm, ±10%, 1/4 W	01121	CB3321
R16	1-945000-181	Resistor, fixed, composition, 6.2 kilohm, ±5%, 1/4 W	01121	CB6225
R17	1-945000-025	Resistor, fixed, composition, 100 ohm, ±10%, 1/4 W	01121	CB1011
R18	1-945000-037	Resistor, fixed, composition, 1 kilohm, ±10%, 1/4 W	01121	CB1021
R19	1-945000-013	Resistor, fixed, composition, 10 ohm, ±10%, 1/4 W	01121	CB1001
R20	1-945000-169	Resistor, fixed, composition, 2 kilohm, ±5%, 1/4 W	01121	CB2025
R21	1-945000-044	Resistor, fixed, composition, 3.9 kilohm, ±10%, 1/4 W	01121	CB3921
R22	1-945000-025	Resistor, fixed, composition, 100 ohm, ±10%, 1/4 W	01121	CB1011
R23	1-945000-037	Resistor, fixed, composition, 1 kilohm, ±10%, 1/4 W	01121	CB1021
R24	1-945000-031	Resistor, fixed, composition, 330 ohm, ±10%, 1/4 W	01121	CB3311
R25	1-945000-025	Resistor, fixed, composition, 100 ohm, ±10%, 1/4 W	01121	CB1011
R26	1-945000-053	Resistor, fixed, composition, 22 kilohm, ±10%, 1/4 W	01121	CB2231
R27	1-945000-043	Resistor, fixed, composition, 3.3 kilohm, ±10%, 1/4 W	01121	CB3321

Table 8-37. Parts List for Measure IF/AF Assembly, A6A1 (Cont.)

Ref. Desig.	Singer Part No.	Description	Mfr. Code No.	Mfr. Part No.
R28	1-945000-025	Resistor, fixed, composition, 100 ohm, ±10%, 1/4 W	01121	CB1011
R29	1-945000-025	Resistor, fixed, composition, 100 ohm, ±10%, 1/4 W	01121	CB1011
R30	1-945000-153	Resistor, fixed, composition, 430 ohm, ±5%, 1/4 W	01121	CB4315
R31	1-945000-029	Resistor, fixed, composition, 220 ohm, ±20%, 1/4 W	01121	CB2211
R32	1-945000-053	Resistor, fixed, composition, 22 kilohm, ±10%, 1/4 W	01121	CB2231
R33	1-945000-033	Resistor, fixed, composition, 470 ohm, ±10%, 1/4 W	01121	CB4711
R34	1-945000-046	Resistor, fixed, composition, 5.6 kilohm, ±10%, 1/4 W	01121	CB5621
R35	1-945000-025	Resistor, fixed, composition, 100 ohm, ±10%, 1/4 W	01121	CB1011
R36	1-945000-049	Resistor, fixed, composition, 10 kilohm, ±10%, 1/4 W	01121	CB1031
R37	1-945000-047	Resistor, fixed, composition, 6.8 kilohm, ±10%, 1/4 W	01121	CB6821
R38	1-945000-025	Resistor, fixed, composition, 100 ohm, ±10%, 1/4 W	01121	CB1011
R39	1-945160-004	Resistor, variable cermet, 500 ohm, ±20%, 1/4 W	32997	3352E501
R40	1-945000-025	Resistor, fixed, composition, 100 ohm, ±10%, 1/4 W	01121	CB1011
R41	1-945000-025	Resistor, fixed, composition, 100 ohm, ±10%, 1/4 W	01121	CB1011
R42	1-945000-030	Resistor, fixed, composition, 270 ohm, ±10%, 1/4 W	01121	CB2711
R43	1-945162-006	Resistor, variable, cermet, 500 ohm, ±20%, 1/2 W	01121	E2A501
R44	1-945000-145	Resistor, fixed, composition, 200 ohm, ±5%, 1/4 W	01121	CB2015
R45	1-945000-025	Resistor, fixed, composition, 100 ohm, ±10%, 1/4 W	01121	CB1011
R46	1-945000-169	Resistor, fixed, composition, 2 kilohm, ±5%, 1/4 W	01121	CB2025
R47	1-945000-051	Resistor, fixed, composition, 15 kilohm, ±10%, 1/4 W	01121	CB1531
R48	1-945000-157	Resistor, fixed, composition, 620 ohm, ±5%, 1/4 W	01121	CB6215
R49	1-945000-041	Resistor, fixed, composition, 2.2 kilohm, ±10%, 1/4 W	01121	CB2221
R50	1-945000-025	Resistor, fixed, composition, 100 ohm, ±10%, 1/4 W	01121	CB1011
R51	1-945000-025	Resistor, fixed, composition, 100 ohm, ±10%, 1/4 W	01121	CB1011

Table 8-37. Parts List for Measure IF/AF Assembly, A6A1 (Cont.)

Ref. Desig.	Singer Part No.	Description	Mfr. Code No.	Mfr. Part No.
R52	1-945000-037	Resistor, fixed, composition, 1 kilohm, ±10%, 1/4 W	01121	CB1021
R53	1-945000-049	Resistor, fixed, composition, 10 kilohm, ±10%, 1/4 W	01121	CB1031
R54	1-945000-044	Resistor, fixed, composition, 3.9 kilohm, ±10%, 1/4 W	01121	CB3921
R55	1-945000-197	Resistor, fixed, composition, 30 kilohm, ±5%, 1/4 W	01121	CB3035
R56	1-945000-027	Resistor, fixed, composition, 150 ohm, ±10%, 1/4 W	01121	CB1511
R57	1-945000-043	Resistor, fixed, composition, 3.3 kilohm, ±10%, 1/4 W	01121	CB3321
R58	1-945000-029	Resistor, fixed, composition, 220 ohm, ±10%, 1/4 W	01121	CB2211
R59	1-945000-018	Resistor, fixed, composition, 27 ohm, ±10%, 1/4 W	01121	CB2701
R60	1-945000-029	Resistor, fixed, composition, 220 ohm, ±10%, 1/4 W	01121	CB2211
R61	1-945000-049	Resistor, fixed, composition, 10 kilohm, ±10%, 1/4 W	01121	CB1031
R62	1-945000-045	Resistor, fixed, composition, 4.7 kilohm, ±10%, 1/4 W	01121	CB4721
R63	1-945000-035	Resistor, fixed, composition, 680 ohm, ±10%, 1/4 W	01121	CB6811
R64	1-945000-017	Resistor, fixed, composition, 22 ohm, ±10%, 1/4 W	01121	CB2201
R65	1-945000-023	Resistor, fixed, composition, 68 ohm, ±10%, 1/4 W	01121	CB6801
R66	1-945000-039	Resistor, fixed, composition, 1.5 kilohm, ±10%, 1/4 W	01121	CB1521
R67	1-945000-025	Resistor, fixed, composition, 100 ohm, ±10%, 1/4 W	01121	CB1011
R68	1-945027-234	Resistor, fixed, film, 2.67 kilohm, ±1%, 1/8 W	14674	RN55-D-2671F
R69	1-945027-227	Resistor, fixed, film, 2.26 kilohm, ±1%, 1/8 W	14674	RN55-D-2261F
R70	1-945000-061	Resistor, fixed, composition, 100 kilohm, ±10%, 1/4 W	01121	CB1041
R71	1-945027-201	Resistor, fixed, film, 1.21 kilohm, ±1%, 1/8 W	14674	RN55-D-1211F
R72	1-945027-249	Resistor, fixed, film, 3.83 kilohm, ±1%, 1/8 W	14674	RN55-D-3831F
R73	1-945027-224	Resistor, fixed, film, 2.1 kilohm, ±1%, 1/8 W	14674	RN55-D-2101F
R74	1-945027-249	Resistor, fixed, film, 3.83 kilohm, ±1%, 1/8 W	14674	RN55-D-3831F
R75	1-945027-269	Resistor, fixed, film, 6.19 kilohm, ±1%, 1/8 W	14674	RN55-D-6191F

Table 8-37. Parts List for Measure IF/AF Assembly, A6A1 (Cont.)

Ref. Desig.	Singer Part No.	Description	Mfr. Code No.	Mfr. Part No.
R76	1-945027-210	Resistor, fixed, film, 1.5 kilohm, ±10%, 1/8 W	14674	RN55-D-1501F
R77	1-945027-318	Resistor, fixed, film, 20 kilohm, ±1%, 1/8 W	14674	RN55-D-2002F
R78	1-945027-318	Resistor, fixed, film, 20 kilohm, ±1%, 1/8 W	14674	RN55-D-2002F
R79	1-945027-385	Resistor, fixed, film, 100 kilohm, ±1%, 1/8 W	14674	RN55-D 1003F
R80	1-945027-414	Resistor, fixed, film, 200 kilohm, ±1%, 1/8 W	14674	RN55-D2003F
R81	1-945027-318	Resistor, fixed, film, 20 kilohm, ±1%, 1/8 W	14674	RN55-D-2002F
R82	1-945027-318	Resistor, fixed, film, 20 kilohm, ±1%, 1/8 W	14674	RN55-D-2002F
R83	1-945027-251	Resistor, fixed, film, 4.02 kilohm, ±1%, 1/8 W	14674	RN55-D-4021F
R84	1-945000-031	Resistor, fixed, composition, 330 ohm, ±10%, 1/4 W	01121	CB3311
R85	1-945000-266	Resistor, fixed, composition, 22 megohm, ±5%, 1/4 W	01121	CB2265
R86	1-945027-385	Resistor, fixed, film, 100 kilohm, ±1%, 1/8 W	14674	RN55-D-1003F
R87	1-945000-049	Resistor, fixed, composition, 10 kilohm, ±10%, 1/4 W	01121	CB1031
R88	1-945000-114	Resistor, fixed, composition, 10 ohm, ±5%, 1/4 W	01121	CB1005
R89	1-945000-037	Resistor, fixed, composition, 1 kilohm, ±10%, 1/4 W	01121	CB1021
R90	1-945160-005	Resistor, variable, cermet, 1 kilohm, ±20%, 1/4 W	32997	3352E102
R91	1-945000-037	Resistor, fixed, composition, 1 kilohm, ±10%, 1/4 W	01121	CB1021
R92	1-945000-052	Resistor, fixed, composition, 18 kilohm, ±10%, 1/4 W	01121	CB1831
R93	1-945000-025	Resistor, fixed, composition, 100 ohm, ±10%, 1/4 W	01121	CB1011
R94	1-945000-049	Resistor, fixed, composition, 10 kilohm, ±10%, 1/4 W	01121	CB1031
R95	1-945000-025	Resistor, fixed, composition, 100 ohm, ±10%, 1/4 W	01121	CB1011
R96	1-945000-037	Resistor, fixed, composition, 1 kilohm, ±10%, 1/4 W	01121	CB1021
R97	1-945000-033	Resistor, fixed, composition, 470 ohm, ±10%, 1/4 W	01121	CB4711
R98	1-945000-025	Resistor, fixed, composition, 100 ohm, ±10%, 1/4 W	01121	CB1011
R99	1-945000-042	Resistor, fixed, composition, 2.7 kilohm, ±10%, 1/4 W	01121	CB2721

Table 8-37. Parts List for Measure IF/AF Assembly, A6A1 (Cont.)

Ref. Desig.	Singer Part No.	Description	Mfr. Code No.	Mfr. Part No.
R100	1-945000-155	Resistor, fixed, composition, 510 ohm, ±5%, 1/4 W	01121	CB5115
R101	1-945000-025	Resistor, fixed, composition, 100 ohm, ±10%, 1/4 W	01121	CB1011
R102	1-945000-048	Resistor, fixed, composition, 8.2 kilohm, ±10%, 1/4 W	01121	CB8221
R103	1-945000-033	Resistor, fixed, composition, 470 ohm, ±10%, 1/4 W	01121	CB4711
R104	1-945000-047	Resistor, fixed, composition, 6.8 kilohm, ±10%, 1/4 W	01121	CB6821
R105	1-945000-155	Resistor, fixed, composition, 510 ohm, ±5%, 1/4 W	01121	CB5115
R106	1-945000-114	Resistor, fixed, composition, 10 ohm, ±5%, 1/4 W	01121	CB1005
R107	1-945000-153	Resistor, fixed, xomposition, 430 ohm, ±5%, 1/4 W	01121	CB4315
R108	1-945027-414	Resistor, fixed, film, 200 kilohm, ±1%, 1/8 W	14674	RN55-D-2003F
R109	1-945027-414	Resistor, fixed, film, 200 kilohm, ±1%, 1/8 W	14674	RN55-D-2003F
R110	1-945027-414	Resistor, fixed, film, 200 kilohm, ±1%, 1/8 W	14674	RN55-D-2003F
R111	1-945027-416	Resistor, fixed, film, 210 kilohm, ±1%, 1/8 W	14674	RN55-D-2103F
R112	1-945027-289	Resistor, fixed, film, 10 kilohm, ±1%, 1/8 W	14674	RN55-D-1002F
R113	1-945027-289	Resistor, fixed, film, 10 kilohm, ±1%, 1/8 W	14674	RN55-D-1002F
R114		Not Used		
R115	1-945000-073	Resistor, fixed, composition, 1 megohm, ±10%, 1/4 W	01121	CB1051
R116	1-945000-025	Resistor, fixed, composition, 100 ohm, ±10%, 1/4 W	01121	CB1011
R117	1-945000-044	Resistor, fixed, compositions 3.9 kilohm, ±10%, 1/4 W	01121	CB3921
R118	1-945000-030	Resistor, fixed, composition, 270 ohm, ±10%, 1/4 W	01121	CB2711
R119	1-945000-159	Resistor, fixed, composition, 750 ohm, ±5%, 1/4 W	01121	CB7515
R120	1-945000-121	Resistor, fixed, composition, 20 ohm, ±5%, 1/4 W	01121	CB2005
R121	1-945000-220	Resistor, fixed, composition, 270 kilohm, ±5%, 1/4 W	01121	CB2745
R122	1-945000-061	Resistor, fixed, composition, 100 kilohm, ±10%, 1/4 W	01121	CB1041
R123	1-945000-114	Resistor, fixed, composition, 10 ohm, ±5%, 1/4 W	01121	CB1005
R124	1-945000-037	Resistor, fixed, composition, 1 kilohm, ±10%, 1/4 W	01121	CB1021

Table 8-37. Parts List for Measure IF/AF Assembly, A6A1 (Cont.)

Ref. Desig.	Singer Part No.	Description	Mfr. Code No.	Mfr. Part No.
R125	1-945000-027	Resistor, fixed, composition, 150 ohm, ±10%, 1/4 W	01121	CB1511
U1	1-926007-026	Integrated circuit, balanced mixer	01295	SN76514N
U2	1-926098-001	Integrated circuit, amplifier	18324	741C
U3	1-926007-026	Integrated circuit, balanced mixer	01295	SN76514N
U4	1-926100-001	Integrated circuit, amplifier	27014	LM301AN
U5	1-926007-014	Integrated circuit, decade counter	01295	SN7490N
U6	1-926120-001	Integrated circuit, audio amplifier	01295	SN16923N

Table 8-38. Parts List for Vertical Amplifier Assembly, A6A2

Ref. Desig.	Singer Part No.	Description	Mfr. Code No.	Mfr. Part No.
C1	1-900115-005	Capacitor, fixed, tantalum 2.2μF ±20%, 15 Vdc	12954	D2R2GS1D15M
C2	1-900001-001	Capacitor, fixed, plastic, 0.01μF, ±20%, 250 Vdc	73445	C280AE, 0.01μF
C3	1-900098-005	Capacitor, fixed, mica, 5 pF, ±20%, 300 Vdc	04062	DM5 CC050K
C4	1-900001-001	Capacitor, fixed, plastic, 0.01μF, ±20%, 250 Vdc	73445	C280AE, 0.01μF
C5	1-900098-032	Capacitor, fixed, mica, 110 pF, ±5%, 300 Vdc	04062	DM5 FC111J
C6	1-900071-021	Capacitor, fixed, mica, 300 pF, ±5%, 300 Vdc	72136	DM10 301J
C7	1-900012-005	Capacitor, fixed, ceramic, 0.1μF, +80%-20%, 500 Vdc	56289	41C92
C8	1-900098-017	Capacitor, fixed, mica, 30 pF, ±5%, 300 Vdc	04062	DM5 EC300J
C9	1-900098-035	Capacitor, fixed, mica, 150 pF, ±5%, 100 Vdc	04062	DM5 FA151J
C10	1-900001-001	Capacitor, fixed, plastic, 0.01μF, ±20%, 250 Vdc	73445	C280AE, 0.01μF
C11	1-900001-001	Capacitor, fixed, plastic, 0.01μF, ±20%, 250 Vdc	73445	C280AE, 0.01μF
C12	1-900115-004	Capacitor, fixed, tantalum, 1.0μF, ±20%, 15 Vdc	12954	D1R0GS1D15M
C13	1-900115-004	Capacitor, fixed, tantalum, 1.0μF, ±20%, 15 Vdc	12954	D1R0GS1D15M
C14	1-900001-001	Capacitor, fixed, plastic, 0.01μF, ±20%, 250 Vdc	73445	C280AE, 0.01μF
C15	1-900115-005	Capacitor, fixed, tantalum, 2.2μF, ±20%, 15 Vdc	12954	D2R2GS1D15M
J1	1-950031-003	Connector, jack, 1 pin	00779	2-332070-5
J2		Not used		
J3	1-950031-003	Connector, jack, 1 pin	00779	2-332070-5
J4	1-950031-003	Connector, jack, 1 pin	00779	2-332070-5
J5	1-950031-003	Connector, jack, 3 pins	00779	2-332070-5
J6	1-950031-003	Connector, jack, 1 pin	00779	2-332070-5
J7		Not used		
J8		Not used		
J9	1-950031-003	Connector, jack, 1 pin	00779	2-332070-5
P1		Connector, plug, consisting of:		
	1-910336-001	Connector, housing, 2 circuit	00779	35077-1
	1-910-337-001	Connector, contact, 2 pins	00779	350218-1
Q1	1-958004-001	Transistor, silicon, NPN	49675	40327
Q2	1-958004-001	Transistor, silicon, NPN	49675	40327

Table 8-38. Parts List for Vertical Amplifier Assembly, A6A2 (Cont.)

Ref. Desig.	Singer Part No.	Description	Mfr. Code No.	Mfr. Part No.
Q3	1-958000-001	Transistor, silicon, NPN	04713	2N3904-5
Q4	1-958000-001	Transistor, silicon, NPN	04713	2N3904-5
Q5	1-958000-001	Transistor, silicon, NPN	04713	2N3904-5
R1	1-945000-021	Resistor, fixed, composition, 47 ohm, ±10%, 1/4 W	01121	CB4701
R2	1-945000-061	Resistor, fixed, composition, 100 kilohm, ±10%, 1/4 W	01121	CB1041
R3	1-945000-085	Resistor, fixed, composition, 10 megohm, ±10%, 1/4 W	01121	CB1061
R4	1-945000-193	Resistor, fixed, composition, 20 kilohm,±5%, 1/4 W	01121	CB2035
R5	1-945027-193	Resistor, fixed, film, 1 kilohm, ±1%, 1/8 W	14674	RN55-D-1001F
R6	1-945027-281	Resistor, fixed, film, 8.25 kilohm, ±1%, 1/8 W	14674	RN55-D-8251F
R7	1-945000-033	Resistor, fixed, composition, 470 ohm, ±10%, 1/4 W	01121	CB4711
R8	1-945002-202	Resistor, fixed, composition, 47 kilohm, ±5%, 1W	01121	GB4735
R9	1-945000-044	Resistor, fixed, composition, 3.9 kilohm, ±10%, 1/4 W	01121	CB3921
R10	1-945160-010	Resistor, variable, cermet, 50 kilohm, ±20%, 1/4 W	32997	3352E503
R11	1-945000-049	Resistor, fixed, composition, 10 kilohm, ±10%, 1/4 W	01121	CB1031
R12	1-945027-243	Resistor, fixed, film, 3.32 kilohm, ±1%, 1/8 W	14674	RN55-D-3321F
R13	1-945001-037	Resistor, fixed, composition, 1 kilohm, ±10%, 1/2 W	01121	EB1021
R14	1-945002-202	Resistor, fixed, composition, 47 kilohm, ±5%, 1 W	01121	GB4735
R15	1-945000-033	Resistor, fixed, composition, 470 ohm, ±10%, 1/4 W	01121	CB4711
R16	1-945027-243	Resistor, fixed, film, 3.32 kilohm, ±1%, 1/8 W	14674	RN55-D-3321F
R17	1-945000-049	Resistor, fixed, composition, 10 kilohm, ±10%, 1/4 W	01121	CB1031
R18	1-945000-049	Resistor, fixed, composition, 10 kilohm, ±10%, 1/4 W	01121	CB1031
R19	1-945000-179	Resistor, fixed, composition, 5.1 kilohm, ±5%, 1/4 W	01121	CB5125
R20	1-945000-037	Resistor, fixed, composition, 1 kilohm, ±10%, 1/4 W	01121	CB1021
R21	1-945000-058	Resistor, fixed, composition, 56 kilohm, ±10%, 1/4 W	01121	CB5631
R22	1-945000-185	Resistor, fixed, composition, 9.1 kilohm, ±5%, 1/4 W	01121	CB9125
R23	1-945000-145	Resistor, fixed, composition, 200 ohm, ±5%, 1/4 W	01121	CB2015

Table 8-38. Parts List for Vertical Amplifier Assembly, A6A2 (Cont.)

Ref. Desig.	Singer Part No.	Description	Mfr. Code No.	Mfr. Part No.
R24	1-945000-169	Resistor, fixed, composition, 2 kilohm, ±5%, 1/4 W	01121	CB2025
R25	1-945000-037	Resistor, fixed, composition, 1 kilohm, ±10%, 1/4	01121	CB1021
R26	1-945000-046	Resistor, fixed, composition, 5.6 kilohm, ±10%, 1/4 W	01121	CB5621
R27	1-945000-055	Resistor, fixed, composition, 33 kilohm, ±10%, 1/4 W	01121	CB3331
R28	1-945000-193	Resistor, fixed, composition, 20 kilohm, ±5%, 1/4 W	01121	CB2035
R29	1-945000-050	Resistor, fixed, composition, 12 kilohm, ±10%, 1/4W	01121	CB1231
R30	1-945000-029	Resistor, fixed, composition, 220 ohm, ±10%, 1/4 W	01121	CB2211
R31	1-945000-193	Resistor, fixed, composition, 20 kilohm, ±5%, 1/4 W	01121	CB2035
R32	1-945000-183	Resistor, fixed, composition, 7.5 kilohm, ±5%, 1/4 W	01121	CB7525
R33	1-945000-056	Resistor, fixed, composition, 39 kilohm, ±10%, 1/4 W	01121	CB3931
U1	1-926069-002	Integrated circuit, operational amplifier	27014	LM308N
U2	1-926100-001	Integrated circuit, operational amplifier	27014	LM301AN

Table 8-39. Parts List for Horizontal Amplifier Assembly, A6A3

Ref. Desig.	Singer Part No.	Description	Mfr. Code No.	Mfr. Part No.
C1	1-900041-105	Capacitor, fixed, polycarbon, 0.0022μF, ±5%, 50 Vdc	12406	HS5A222J
C2	1-900041-121	Capacitor, fixed, polycarbon, 0.047μF, ±5%, 50 Vdc	12406	HS5A473J
C3	1-900001-113	Capacitor, fixed, plastic, 0.1μF, ±10%, 250 Vdc	73445	C280AE, 0.1μF
C4	1-900039-001	Capacitor, fixed, electrolytic, 25μF, +75%-10%, 25 Vdc	76433	984-2203
C5	1-900115-007	Capacitor, fixed, tantalum, 10μF, ±20%, 20 Vdc	12954	D10GS1D20M
C6	1-900012-005	Capacitor, fixed, ceramic, 0.1μF, +80%-20%, 500 Vdc	56289	41C92
C7	1-900098-017	Capacitor, fixed, mica, 30 pF, ±5%, 300 Vdc	04062	DM5 EC300J
CR1	1-913085-001	Diode, silicon, Vr = 75 V, If = 20 mA	50273	1N3062
J1	1-950031-003	Connector, jack, 1 pin	00779	2-332070-5
J2	1-950031-003	Connector, jack, 1 pin	00779	2-332070-5
J3	1-950031-003	Connector, jack, 1 pin	00779	2-332070-5
J4	1-950031-003	Connector, jack, 1 pin	00779	2-332070-5
J5	1-950031-003	Connector, jack, 1 pin	00779	2-332070-5
J6	1-950031-003	Connector, jack, 1 pin	00779	2-332070-5
J7	1-950031-003	Connector, jack, 3 pins	00779	2-332070-5
J8	1-950031-003	Connector, jack, 3 pins	00779	2-332070-5
J9	1-950031-003	Connector, jack, 3 pins	00779	2-332070-5
J10	1-950031-003	Connector, jack, 3 pins	00779	2-332070-5
J11	1-950031-003	Connector, jack, 1 pin	00779	2-332070-5
J12	1-950031-003	Connector, jack, 3 pins	00779	2-332070-5
J13		Not used		
J14		Not used		
J15	1-950031-003	Connector, jack, 1 pin	00779	2-332070-5
P1		Connector, plug, consisting of:		
	1-910336-001	Connector, housing, 2 circuit	00779	350777-1
	1-910338-001	Connector, contact, 2 socket	00779	350546-1
Q1	1-958082-001	Transistor, silicon, PNP	07263	2N4250
Q2	1-958000-002	Transistor, silicon, PNP	04713	2N3906-5
Q3	1-958000-001	Transistor, silicon, NPN	04713	2N3904-5
Q4	1-958002-004	Transistor, N-channel, J-FET	88869	
Q5	1-958004-001	Transistor, silicon, NPN	02735	40327-66030
Q6	1-958004-001	Transistor, silicon, NPN	02735	40327-66030
R1	1-945000-152	Resistor, fixed, composition, 390 ohm, ±5%, 1/4 W	01121	CB3915
R2	1-945000-194	Resistor, fixed, composition, 22 kilohm, ±5%, 1/4 W	01121	CB2235

Table 8-39. Parts List for Horizontal Amplifier Assembly, A6A3 (Cont.)

Ref. Desig.	Singer Part No.	Description	Mfr. Code No.	Mfr. Part No.
R3	1-945000-196	Resistor, fixed, composition, 27 kilohm, ±5%, 1/4 W	01121	CB2735
R4	1-945027-300	Resistor, fixed, film 13 kilohm, ±1%, 1/8 W	14674	RN55-D-1302F
R5	1-945027-234	Resistor, fixed, film 2.67 kilohm, ±1%, 1/8 W	14674	RN55-D-2671F
R6	1-945000-089	Resistor, fixed, composition, 22 megohm, ±10%, 1/4 W	01121	CB2261
R7	1-945000-053	Resistor, fixed, composition, 22 kilohm, ±10%, 1/4 W	01121	CB2231
R8	1-945000-037	Resistor, fixed, composition, 1 kilohm, ±10%, 1/4 W	01121	CB1021
R9	1-945002-202	Resistor, fixed, composition, 47 kilohm, ±5%, 1 W	01121	GB4735
R10	1-945027-251	Resistor, fixed, film, 4.02 kilohm, ±1%, 1/8 W	14674	RN55-D-4021F
R11	1-945000-031	Resistor, fixed, composition, 330 ohm, ±10%, 1/4 W	01121	CB3311
R12	1-945027-251	Resistor, fixed, film, 4.02 kilohm, ±1%, 1/8 W	14674	RN55-D-4021F
R13	1-945002-202	Resistor, fixed, composition, 47 kilohm, ±5%, 1 W	01121	GB4735
R14	1-945001-037	Resistor, fixed, composition, 1 kilohm, ±10%, 1/2 W	01121	EB1025
R15	1-945160-006	Resistor, variable, cermet, 2 kilohms, ±20%, 1/4 W	32997	3352E202
R16	1-945000-209	Resistor, fixed, composition, 91 kilohm, ±5%, 1/4 W	01121	CB9135
R17	1-945000-209	Resistor, fixed, composition, 91 kilohm, ±5%, 1/4 W	01121	CB9135
R18	1-945000-218	Resistor, fixed, composition, 220 kilohm, ±5%, 1/4 W	01121	CB2245
U1	1-926100-001	Integrated circuit, amplifier	27014	LM301AN

Table 8-40. Parts List for Audio Oscillator Assembly, A6A4

Ref. Desig.	Singer Part No.	Description	Mfr. Code No.	Mfr. Part No.
C1	1-900001-013	Capacitor, fixed, plastic, 0.1μF, ±20%, 250 Vdc	73445	C280AE, 0.1μF
C2	1-900098-017	Capacitor, fixed, mica, 30 pF, ±5%, 300 Vdc	04062	DM5 EC300J
C3	1-900041-013	Capacitor, fixed, polycarbon, 0.01μF, ±10%, 50 Vdc	12406	C2B103K
C4	1-900041-013	Capacitor, fixed, polycarbon, 0.01μF, ±10%, 50 Vdc	12406	C2B103K
C5	1-900115-005	Capacitor, fixed, tantalum, 2.2μF, ±20%, 15 Vdc	12954	D2R2GS1D15M
C6	1-900041-013	Capacitor, fixed, polycarbon, 0.01μF, ±10%, 50 Vdc	12406	C2B103K
C7	1-900041-013	Capacitor, fixed, polycarbon, 0.01μF, ±10%, 50 Vdc	12406	C2B103K
C8	1-900001-121	Capacitor, fixed, plastic, 0.47μF, ±10%, 250 Vdc	73445	C280AE, 0.47μF
CR1	1-913085-001	Diode, silicon, Vr = 75 V, If = 20 mA	50273	1N3062
CR2	1-913085-001	Diode, silicon, Vr = 75V, If = 20 mA	50273	1N3062
CR3	1-913085-001	Diode, silicon, Vr = 75 V, If = 20 mA	50273	1N3062
J1	1-950031-003	Connector, jack, 1 pin	00779	2-332070-5
J2	1-950031-003	Connector, jack, 1 pin	00779	2-332070-5
J3	1-950031-003	Connector, jack, 3 pin	00779	2-332070-5
J4	1-950031-003	Connector, jack, 1 pin	00779	2-332070-5
J5	1-950031-003	Connector, jack, 1 pin	00779	2-332070-5
Q1	1-958002-003	Transistor, N-channel, J-FET	04713	2N5459-5
R1	1-945000-144	Resistor, fixed, composition, 180 ohm, ±5%, 1/4 W	01121	CB1815
R2	1-945000-169	Resistor, fixed, composition, 2 kilohm, ±5%, 1/4 W	01121	CB2025
R3	1-945000-163	Resistor, fixed, composition, 1.1 kilohm, ±5%, 1/4 W	01121	CB1125
R4	1-945000-210	Resistor, fixed, composition, 100 kilohm, ±5%, 1/4 W	01121	CB1045
R5	1-945000-228	Resistor, fixed, composition, 560 kilohm, ±5%, 1/4 W	01121	CB5645
R6	1-945000-220	Resistor, fixed, composition, 270 kilohm, ±5%, 1/4 W	01121	CB2745
R7	1-945000-210	Resistor, fixed, composition, 100 kilohm, ±5%, 1/4 W	01121	CB1045
R8	1-945000-176	Resistor, fixed, composition, 3.9 kilohm, ±5%, 1/4 W	01121	CB3925
R9	1-945000-203	Resistor, fixed, composition, 51 kilohm, ±5%, 1/4 W	01121	CB5135
R10	1-945000-186	Resistor, fixed, composition, 10 kilohm, ±5%, 1/4 W	01121	CB1035

Table 8-40. Parts List for Audio Oscillator Assembly, A6A4 (Cont.)

Ref. Desig.	Singer Part No.	Description	Mfr. Code No.	Mfr. Part No.
R11	1-945000-196	Resistor, fixed, composition, 27 kilohm, ±5%, 1/4 W	01121	CB2735
R12	1-945160-008	Resistor, variable, cermet, 10 kilohm, ±20%, 1/4 W	32997	3352E103
R13	1-945160-009	Resistor, variable, cermet, 20 kilohm, ±20%, 1/4 W	32997	3352E203
R14	1-945160-005	Resistor, variable, cermet, 1 kilohm, ±20%, 1/4 W	32997	3352E102
R15	1-945000-168	Resistor, fixed, composition, 1.8 kilohm, ±5%, 1/4 W	01121	CB2025
R16	1-945160-006	Resistor, variable, cermet, 2 kilohm, ±20%, 1/4 W	32997	3352E202
R17	1-945000-210	Resistor, fixed composition, 100 kilohm, ±5%, 1/4 W	01121	CB1045
R18	1-945000-210	Resistor, fixed, composition, 100 kilohm, ±5%, 1/4 W	01121	CB1045
R19	1-945000-192	Resistor, fixed, composition, 18 kilohm, ±5%, 1/4 W	01121	CB1835
R20	1-945000-121	Resistor, fixed, composition, 20 ohm, ±5%, 1/4 W	01121	CB2005
RT1	1-945070-001	Thermistor, disc, 300 ohm, ±10% @ 25°C	15801	KB23J
U1	1-926100-001	Integrated circuit, amplifier	27014	LM301AN

Table 8-41. Parts List for Power Supply Assembly, A7

Ref. Desig.	Singer Part No.	Description	Mfr. Code No.	Mfr. Part No.
C1	1-900001-013	Capacitor, fixed, plastic, 0.1 μF, ±20%, 250 Vdc	73445	C280A3, 0.1 μF
C2	1-900001-013	Capacitor, fixed, plastic, 0.1 μF, ±20%, 250 Vdc	73445	C280A3, 0.1 μF
C3	1-900115-010	Capacitor, fixed, tantalum, 150 μF, ±20%, 15 Vdc	12954	D150GS1D15M
CR1	1-913005-001	Diode, germanium, Vr=30 V, If=100 mA	03877	1N273
Q1	1-958001-001	Transistor, silicon, PNP	04713	MJE370
R1	1-945000-049	Resistor, fixed, composition, 10 kilohm, ±10%, 1/4 W	01121	CB1031
R2	1-945000-180	Resistor, fixed, composition, 5.6 kilohm, ±5%, 1/4 W	01121	CB5625
R3	1-945162-107	Resistor, variable, cermet, 1 kilohm, ±20%, 1/2 W	01121	E4A102
R4	1-945000-037	Resistor, fixed, composition, 1 kilohm, ±10%, 1/4 W	01121	CB1021
R5	1-945000-044	Resistor, fixed, composition, 3.9 kilohm, ±10%, 1/4 W	01121	CB3921
R6	1-945000-136	Resistor, fixed, composition, 82 ohm, ±5%, 1/4 W	01121	CB8205
R7	1-945000-138	Resistor, fixed, composition, 100 ohm, ±5%, 1/4 W	01121	CB1015
R8	1-945000-166	Resistor, fixed, composition, 1.5 kilohm, ±5%, 1/4 W	01121	CB1525
R9	1-945000-156	Resistor, fixed, composition, 560 ohm, ±5%, 1/4 W	01121	CB5615
R10	1-945162-107	Resistor, variable, cermet, 1 kilohm, ±20%, 1/2 W	01121	E4A102
R11	1-945000-174	Resistor, fixed, composition, 3.3 kilohm, ±5%, 1/4 W	01121	CB3325
R12	1-945004-001	Resistor, fixed, wirewound, 0.15 ohm, ±10%, 5 W	75042	PW5
U1	1-926115-001	Integrated circuit, voltage regulator	07263	723PC

Table 8-42. Parts List for High Voltage Power Supply Assembly, A8

Ref. Desig.	Singer Part No.	Description	Mfr. Code No.	Mfr. Part No.
C1	1-900001-113	Capacitor, fixed, plastic, 0.1μF, ±10%, 250 Vdc	73445	C280AE, 0.1μF
C2	1-900115-010	Capacitor, fixed, tantalum, 150μF, ±20%, 15 Vdc	12954	D150GS1D15M
C3	1-900001-121	Capacitor, fixed, plastic, 0.47μF, ±10%, 250 Vdc	73445	C280AE, 0.47μF
C4	1-900115-010	Capacitor, fixed, tantalum, 150μF, ±20%, 15 Vdc	12954	D150GS1D15M
C5	1-900115-010	Capacitor, fixed, tantalum, 150μF, ±20%, 15 Vdc	12954	D150GS1D15M
C6	1-900012-012	Capacitor, fixed, ceramic, 0.02μF, ±20%, 1 K Vdc	56289	5GA-S20
C7	1-900012-012	Capacitor, fixed, ceramic, 0.02μF, ±20%, 1 K Vdc	56289	5GA-S20
C8	1-900012-012	Capacitor, fixed, ceramic, 0.02μF, ±20%, 1 K Vdc	56289	5GA-S20
C9	1-900011-001	Capacitor, fixed, electrolytic, 4μF, +100%-10%, 350 Vdc	14655	BR4μF-350 V
C10	1-900011-001	Capacitor, fixed, electrolytic, 4μF, +100%-10%, 350 Vdc	14655	BR4μF-350 V
C11	1-900001-005	Capacitor, fixed, plastic, 0.022μF, ±20%, 250 Vdc	73445	C280AE, 0.022μF
CR1	1-913088-001	Diode, silicon, Vr = 50 V, If = 30 A	04713	1N4933
CR2	1-913088-001	Diode, silicon, Vr = 50 V, If = 30 A	04713	1N4933
CR3	1-913088-001	Diode, silicon, Vr = 50 V, If = 30 A	04713	1N4933
CR4	1-913088-001	Diode, silicon, Vr = 50 V, If = 30 A	04713	1N4933
CR5	1-913087-001	Diode, silicon, Vr = 2000 V, If = 50 mA	27777	VG2X
CR6	1-913087-001	Diode, silicon, Vr = 2000 V, If = 50 mA	27777	VG2X
CR7	1-913088-002	Diode, silicon, Vr = 400 V, If = 1A	04713	1N4936
CR8	1-913088-002	Diode, silicon, Vr = 400 V, If = 1A	04713	1N4936
J1	1-910029-002	Connector, jack, 1 pin	00779	61182-2
J2	1-910029-002	Connector, jack, 1 pin	00779	61182-2
J3	1-910029-002	Connector, jack, 1 pin	00779	61182-2
J4	1-910029-002	Connector, jack, 1 pin	00779	61182-2
J5	1-910029-002	Connector, jack, 1 pin	00779	61182-2
L1	1-906007-003	Inductor, fixed, 1 mH	04213	670-3
L2	1-906016-049	Inductor, fixed, 1000 μH, ±10%, 13 mA	24759	DR-1000

Table 8-42. Parts List for High Voltage Power Supply Assembly, A8 (Cont.)

Ref. Desig.	Singer Part No.	Description	Mfr. Code No.	Mfr. Part No.
Q1	1-958001-004	Transistor, silicon, NPN	04713	MJE521
Q2	1-958001-004	Transistor, silicon, NPN	04713	MJE521
R1	1-945000-023	Resistor, fixed, composition, 68 ohm, ±10%, 1/4 W	01121	CB6801
R2	1-945000-035	Resistor, fixed, composition, 680 ohm, ±10%, 1/4 W	01121	CB6811
R3		Not used		
R4	1-945000-049	Resistor, fixed, composition, 10 kilohm, ±10%, 1/4 W	01121	CB1031
T1	1-403938-001	Transformer, toroid, step-up	88869	

Table 8-43. Parts List for 10 MHz Switch Assembly, A9

Ref. Desig.	Singer Part No.	Description	Mfr. Code No.	Mfr. Part No.
CR1	1-913007-001	Diode, silicon, Vr=75 V, If=10 mA	03508	1N4148
CR2	1-913007-001	Diode, silicon Vr=75 V, If=10 mA	03508	1N4148
CR3	1-913007-001	Diode, silicon, Vr=75 V, If=10 mA	03508	1N4148
CR4	1-913007-001	Diode, silicon Vr=75 V, If=10 mA	03508	1N4148
CR5	1-913007-001	Diode, silicon, Vr=75 V, If=10 mA	03508	1N4148
CR6	1-913007-001	Diode, silicon Vr=75 V, If=10 mA	03508	1N4148
J1	1-403946-001	Connector, jack, 14 pin	88869	
J2	1-910029-002	Connector, jack, 1 pin	00779	61182-2
J3	1-910029-002	Connector, jack, 1 pin	00779	61182-2
J4	1-403946-001	Connector, jack, 10 pin	88869	
J5	1-910029-002	Connector, jack, 1 pin	00779	61182-2
P1	1-910358-002	Connector, plug, 14 pin	22526	65848-004
R1	1-945027-187	Resistor, fixed, film, 866 ohm, ±1%, 1/8 W	14674	RN55-D-8660F
R2	1-945027-187	Resistor, fixed, film, 866 ohm, ±1%, 1/8 W	14674	RN55-D-8660F
S1	1-403844-001	Switch, rotary, 5 poles, 12 position	88869	

Table 8-44. Parts List for 100 MHz Switch Assembly, A10

Ref. Desig.	Singer Part No.	Description	Mfr. Code No.	Mfr. Part No.
J1	1-403946-001	Connector, jack, 14 pin	88869	
J2	1-910029-002	Connector, jack, 1 pin	00779	61182-2
J3	1-910029-002	Connector, jack, 1 pin	00779	61182-2
J4	1-910029-002	Connector, jack, 1 pin	00779	61182-2
P1	1-910358-002	Connector, plug, 14 pin	22526	65848-004
Q1	1-958000-001	Transistor, silicon, NPN	04713	2N3904-5
Q2	1-958000-001	Transistor, silicon, NPN	04713	2N3904-5
R1	1-945000-162	Resistor, fixed, composition, 1 kilohm, ±5%, 1/4 W	01121	CB1025
R2	1-945000-162	Resistor, fixed, composition, 1 kilohm, ±5%, 1/4 W	01121	CB1025
S1	1-403845-001	Switch, rotary, 1 pole, 6 positions	88869	
U1	1-926121-002	Integrated circuit, quad 2-input NOR gate	27014	MM74C02N
U2	1-926121-004	Integrated circuit, dual 4-input NAND gate	27014	MM74C10N
U3	1-926121-001	Integrated circuit, quad 2-input NAND gate	27014	MM74C00N

Table 8-45. Parts List for 1 MHz Switch Assembly, A11

Ref. Desig.	Singer Part No.	Description	Mfr. Code No.	Mfr. Part No.
CR1	1-913007-001	Diode, silicon, Vr=75 V, If=10 mA	03508	1N4848
CR2	1-913007-001	Diode, silicon, Vr=75 V, If=10 mA	03508	1N4848
CR3	1-913007-001	Diode, silicon Vr=75 V, If=10 mA	03508	1N4848
CR4	1-913007-001	Diode, silicon, Vr=75 V, If=10 mA	03508	1N4148
J1	1-910358-001	Connector, jack, 14 pin	22526	65848-004
J2	1-910029-002	Connector, jack, 1 pin	00779	61182-2
J3	1-910029-002	Connector, jack, 1 pin	00779	61182-2
J4	1-910029-002	Connector, jack, 1 pin	00779	61182-2
S1	1-403843-001	Switch, rotary, 5 pole, 12 position	88869	

Table 8-46. Parts List for 0.1 kHz, 1 kHz, 10 kHz and 100 kHz Frequency Switch Assemblies, A12, A13, A14, A15

Ref. Desig.	Singer Part No.	Description	Mfr. Code No.	Mfr. Part No.
S1	1-403842-001	Switch, rotary, 2 pole, 12 position	88869	

Table 8-47. Parts List for 0-100 Hz Potentiometer Assembly, A16

Ref. Desig.	Singer Part No.	Description	Mfr. Code No.	Mfr. Part No.
J1	556-205-001	Connector, jack, SMB	98291	51-051-000
J2	556-205-001	Connector, jack, SMB	98291	51-051-000
J3	556-205-001	Connector, jack, SMB	98291	51-051-000
J4	1-910029-002	Connector, jack, 1 pin	00779	61182-2
J5	1-910029-002	Connector, jack, 1 pin	00779	61182-2
J6	1-910029-002	Connector, jack, 1 pin	00779	61182-2
P1	1-910140-003	Connector, plug, SMB	98291	51-028-0000
P2	1-910358-001	Connector, plug, 10 pin	22526	65848-004
P3	1-910140-003	Connector, plug, SMB	98291	51-028-0000
R1/S1	1-403970-001	Variable resistor/switch assembly (R1) Resistor, variable, wirewound, 5 kilohm, ±10%, 2.5 W	88869	
R2	1-945162-113	Resistor, variable, cermet, 100 kilohm, ±20%, 1/2 W	01121	E4A104
R3	1-945162-107	Resistor, variable, cermet, 1 kilohm, ±20%, 1/2 W	01121	E4A102
R4	1-945162-110	Resistor, variable, cermet, 10 kilohm, ±20%, 1/2 W	01121	E4A103
R5	1-945162-104	Resistor, variable, cermet 100 ohm, ±20%, 1/2 W	01121	E4A101
R6	1-945162-104	Resistor, variable, cermet, 100 ohm, ±20%, 1/2 W	01121	E4A101
R7	1-945000-049	Resistor, fixed, composition, 10 kilohm, ±10%, 1/4 W	01121	CB1031
R8	1-945027-176	Resistor, fixed, film, 665 ohm, ±1%, 1/8 W	14674	RN55-D-6650F
R9	1-945027-260	Resistor, fixed, film, 4.99 kilohm, ±1%, 1/8 W	14674	RN55-D-4991F
R10	1-945027-193	Resistor, fixed, film, 1 kilohm, ±1%, 1/8 W	14674	RN55-D-1001F
R11	1-945027-132	Resistor, fixed, film, 232 ohm, ±1%, 1/8 W	14674	RN55-D-2320F
R12	1-945000-061	Resistor, fixed, composition, 100 kilohm, ±10%, 1/4 W	01121	CB1041
R13	1-945027-160	Resistor, fixed, film, 453 ohm, ±1%, 1/8 W	14674	RN55-D-4530F
R14	1-945027-176	Resistor, fixed, film, 665 ohm, ±1%, 1/8 W	14674	RN55-D-6650F
S1		Switch, rotary, 1 pole, 2 position (part of R1/S1)		

Table 8-48. Parts List for Vertical Position/Gain Potentiometer – Horizontal Position/Gain Potentiometer Assembly, A17

Ref. Desig.	Singer Part No.	Description	Mfr. Code No.	Mfr. Part No.
P1	1-910342-001	Connector, plug, 10 pin D1P	00779	88219-1
R1/R2	1-403971-001	Variable resistor assembly (R1) Resistor, variable, composition, 100 kilohm, ±30%, 1/3 W	88869	
R2		Resistor, variable, composition, 50 kilohm, ±30%, 1/3 W (part of R1/R2)		
R3/R4	1-403972-001	Variable resistor assembly (R3) Resistor, variable, composition, 2.5 kilohm, ±30%, 1/2 W	88869	
R4		Resistor, variable, composition, 2.5 kilohm, ±30%, 1/2 W (part of R3/R4)		
R5	1-945000-178	Resistor, fixed, composition, 4.7 kilohm, ±5%, 1/4 W	01121	CB4725
R6	1-945000-162	Resistor, fixed, composition, 1 kilohm, ±5%, 1/4 W	01121	CB1025

Table 8-49. Parts List for Focus/Intensity and Sweep Mode/Sweep Rate Assembly, A18

Ref. Desig.	Singer Part No.	Description	Mfr. Code No.	Mfr. Part No.
C1	1-900012-012	Capacitor, fixed, ceramic, 0.02 μF, ±20%, 1000 Vdc	72982	5GA-S20
DS1	1-925003-001	Lamp, neon, T2	03508	NE2E
J1	131-46	Connector, jack, rt. angle RF	24931	P5020
P1	1-910336-003	Connector, plug, 4 pin	00779	350780-1
P2	1-910343-001	Connector, plug, 10 pin	00779	86981-1
R1/R2	1-403973-001	Variable resistor assembly (R1) Resistor, variable, composition, 500 kilohm, ±30%, 1/4 W	88869	
R2		Resistor, variable, composition, 1 megohm, ±30%, 1/4 W (part of R1/R2)		
R3/S1	1-403848-001	Variable resistor/switch assembly (R3) Resistor, variable, composition, 1 megohm, ±10%, 1/4 W	88869	
R4	1-945000-069	Resistor, fixed, composition, 470 kilohm, ±10%, 1/4 W	01121	CB4741
R5	1-945000-073	Resistor, fixed, composition, 1 megohm, ±10%, 1/4 W	01121	CB1051
R6	1-945002-245	Resistor, fixed, composition, 3 megohm, ±5%, 1W	01121	GB3055
R7	1-945000-037	Resistor, fixed, composition, 1 kilohm, ±10%, 1/4 W	01121	CB1021
S1		Switch, rotary, 2 pole, 3 position, (part of R3/S1)		

Table 8-50. Parts List for Vertical Mode/Carrier Level and Sweep Width Assembly, A19

Ref. Desig.	Singer Part No.	Description	Mfr. Code No.	Mfr. Part No.
C1	1-900115-006	Capacitor, fixed, tantalum, 22μF, ±20%, 15 V dc	12954	D22GS1D15M
C2	1-900115-005	Capacitor, fixed, tantalum, 2.2μF, ±20%, 15 Vdc	12954	D2R2GS1D15M
C3	1-900001-013	Capacitor, fixed, plastic, 0.1μF, ±20%, 250 Vdc	73445	C280AE, 0.1μF
C4	1-900012-002	Capacitor, fixed, ceramic, 0.001μF, +100%-0%, 500 Vdc	72982	861Z5U102P
CR1	1-913005-001	Diode, germanium, Vr = 30 V, If = 100 mA	03877	1N273
J1	131-46	Connector, jack, rt. angle RF	24931	P5020
J2	131-46	Connector, jack, rt. angle RF	24931	P5020
J3	131-46	Connector, jack, rt. angle RF	24931	P5020
J4	1-403946-001	Connector, 10 posts	88869	
J5	131-46	Connector, jack, rt. angle RF	24931	P5020
J6	131-46	Connector, jack, rt. angle RF	24931	P5020
R1/S1	1-403914-001	Variable resistor/switch assembly (R1) Resistor, variable, composition, 5 kilohm, ±30%, 1/2 W	88869	
R2/S2	1-403847-001	Variable resistor/switch assembly (R2) Resistor, variable, composition, 500 ohm, ±20%, 1/2 W	88869	
R3	1-945000-135	Resistor, fixed, composition, 75 ohm, ±5%, 1/4 W	01121	CB7505
R4	1-945000-157	Resistor, fixed, composition, 620 ohm, ±5%, 1/4 W	01121	CB6215
R5	1-945027-230	Resistor, fixed, film, 2.43 kilohm, ±1%, 1/8 W	14674	RN55-D-2431F
R6	1-945027-173	Resistor, fixed, film, 619 ohm, ±1%, 1/8 W	14674	RN55-D-6190F
R7	1-945000-145	Resistor, fixed, composition, 200 ohm, ±5%, 1/4 W	01121	CB2015
R8	1-945027-331	Resistor, fixed, film, 27.4 kilohm, ±1%, 1/8 W	14674	RN55-D-2742F
R9	1-945000-204	Resistor, fixed, composition, 56 kilohm, ±5%, 1/4 W	01121	CB5635
R10	1-945027-307	Resistor, fixed, film, 15.4 kilohm, ±1%, 1/8 W	14674	RN55-D-1542F
R11	1-945027-307	Resistor, fixed, film, 15.4 kilohm, ±1%, 1/8 W	14674	RN55-D-1542F
S1		Switch, rotary, 1 pole, 2 position (part of R1/S1)		
S2		Switch, rotary, 3 pole, 6 position (part of R2/S2)		

Table 8-51. Parts List for Tone Frequency/Tone Level Amplitude Modulator Switch Assembly, A20

Ref. Desig.	Singer Part No.	Description	Mfr. Code No.	Mfr. Part No.
C1	1-900098-017	Capacitor, fixed, mica, 30 pF, ±5%, 300 Vdc	04062	DM5EC300J
J1	131-46	Connector, jack, rt. angle RF	24931	P5020
J2	131-46	Connector, jack, rt. angle RF	24931	P5020
J3	131-46	Connector, jack, rt. angle RF	24931	P5020
P1	1-910343-001	Connector, plug, 10 pin	15912	609-1000M
R1	1-945000-199	Resistor, fixed, composition, 36 kilohm, ±5%, 1/4 W	01121	CB3635
R2	1-945000-179	Resistor, fixed, composition, 5.1 kilohm, ±5%, 1/4 W	01121	CB5125
R3	1-945000-176	Resistor, fixed, composition, 3.9 kilohm, ±5%, 1/4 W	01121	CB3925
R4	1-945000-186	Resistor, fixed, composition, 10 kilohm, ±5%, 1/4 W	01121	CB1035
R5	1-945000-210	Resistor, fixed, composition, 100 kilohm, ±5%, 1/4 W	01121	CB1045
R6/S1	1-403913-001	Variable resistor/switch assembly (R6) Resistor, variable, composition, 10 kilohm, ±30%, 1/2 W	88869	
R7	1-945000-156	Resistor, fixed, composition, 560 ohm, ±5%, 1/4 W	01121	CB5615
S1		Switch, rotary, 2 pole, 3 position (part of R6/S1)		
S2	1-951024-002	Switch, push-push, 1 pole, 3 position	82389	65017-206
U1	1-926100-001	Integrated circuit, amplifier	17014	LM301AN

Table 8-52. Parts List for Function Switch, Audio Mode/Volume Switch Potentiometer Assembly, A21

Ref. Desig.	Singer Part No.	Description	Mfr. Code No.	Mfr. Part No.
P1	1-910343-001	Connector, plug, 10 pin	15912	609-1000M
P2	1-910343-001	Connector, plug, 10 pin	15912	609-1000M
P3	1-910343-001	Connector, plug, 10 pin	15912	609-1000M
R1/S2	1-403849-001	Variable resistor/switch assembly (R1) Resistor, variable, composition, 50 kilohm, ±30%, 1/3 W	88869	
R2	1-945000-186	Resistor, fixed, composition, 10 kilohm, ±5%, 1/4 W	01121	CB1035
R3	1-945000-186	Resistor, fixed, composition, 10 kilohm, ±5%, 1/4 W	01121	CB1035
R4	1-945000-169	Resistor, fixed, composition, 2 kilohm, ±5%, 1/4 W	01121	CB2025
S1	1-403912-001	Dual concentric switch assembly (S1) Switch, rotary, 3 pole, 6 position	88869	
S2		Switch, rotary, 1 pole, 2 position (part of R1)		
S3		Switch, rotary, 1 pole, 2 position (part of S1)		

Table 8-53. Parts List for Interconnect Assembly, A22

Ref. Desig.	Singer Part No.	Description	Mfr. Code No.	Mfr. Part No.
A22A1	4-005190-001	Assembly, Measure Broadband Amplifier	88869	
FL1	1-919011-003	Filter, feed-thru, 100 MHz to 10 GHz	72982	1202-051
W1	2-005398-001	Cable assembly, semi-rigid coax, 6.4 in.	88869	
W2	2-005399-001	Cable assembly, coaxial, 31 in.	88869	
W3	2-005-400-001	Cable assembly, coaxial, 25.5 in.	88869	
XA22A1J1	1-403946-001	Connector, jack, 5 pin	88869	
XA22A1J2		Connector, jack, consisting of:		
	1-900079-003	Capacitor, fixed, feed-thru, 470 pF, +100% -0%, 300 Vdc	01121	FW5N-471P
	1-910301-001	Connector, contact, 1 pin	00779	86090-3
XA22A1J3	1-403946-001	Connector, jack, 5 pin	88869	
XA22A1J4	1-403946-001	Connector, jack, 5 pin	88869	

Table 8-54. Parts List for Measure Broadband Amplifier Assembly, A22A1

Ref. Desig.	Singer Part No.	Description	Mfr. Code No.	Mfr. Part No.
C1	1-900115-005	Capacitor, fixed, tantalum, 2.2μF, ±20%, 15 Vdc	12954	D2R2GS1D15M
C2	1-900115-005	Capacitor, fixed, tantalum, 2.2μF, ±20%, 15 Vdc	12954	D2R2GS1D15M
C3	1-900115-005	Capacitor, fixed, tantalum, 2.2μF, ±20%, 15 Vdc	12954	D2R2GS1D15M
C4	1-900115-005	Capacitor, fixed, tantalum, 2.2μF, ±20%, 15 Vdc	12954	D2R2GS1D15M
C5	1-900115-005	Capacitor, fixed, tantalum, 2.2μF, ±20%, 15 Vdc	12954	D2R2GS1D15M
C6	1-900115-005	Capacitor, fixed, tantalum, 2.2μF, ±20%, 15 Vdc	12954	D2R2GS1D15M
C7	1-900098-002	Capacitor, fixed, mica, 2 pF, ±0.5 pF, 300 Vdc	04062	DM5 CC020D
C8	1-900117-002	Capacitor, variable, ceramic, 3.3 pF to 18 pF, 250 Vdc	91293	9313
C9	1-900115-005	Capacitor, fixed, tantalum, 2.2μF, ±20%, 15 Vdc	12954	D2R2GS1D15M
C10	1-900115-005	Capacitor, fixed, tantalum, 2.2μF, ±20%, 15 Vdc	12954	D2R2GS1D15M
C11	1-900115-005	Capacitor, fixed, tantalum, 2.2μF, ±20%, 15 Vdc	12954	D2R2GS1D15M
C12	1-900115-005	Capacitor, fixed, tantalum, 2.2μF, ±20%, 15 Vdc	12954	D2R2GS1D15M
C13	1-900115-005	Capacitor, fixed, tantalum, 2.2μF, ±20%, 15 Vdc	12954	D2R2GS1D15M
C14	1-900115-005	Capacitor, fixed, tantalum, 2.2μF, ±20%, 15 Vdc	12954	D2R2GS1D15M
C15	1-900098-002	Capacitor, fixed, mica, 2 pF, ±0.5 pF, 300 Vdc	04062	DM5 CC020D
C16	1-900117-002	Capacitor, variable, ceramic, 3.3 pF to 18 pF, 250 Vdc	91293	9313
C17	1-900115-005	Capacitor, fixed, tantalum, 2.2μF, ±20%, 15 Vdc	12954	D2R2GS1D15M
C18	1-900115-005	Capacitor, fixed, tantalum, 2.2μF, ±20%, 15 Vdc	12954	D2R2GS1D15M
C19	1-900115-005	Capacitor, fixed, tantalum, 2.2μF, ±20%, 15 Vdc	12954	D2R2GS1D15M
C20	1-900115-005	Capacitor, fixed, tantalum, 2.2μF, ±20%, 15 Vdc	12954	D2R2GS1D15M
C21	1-900115-005	Capacitor, fixed, tantalum, 2.2μF, ±20%, 15 Vdc	12954	D2R2GS1D15M
C22	1-900115-005	Capacitor, fixed, tantalum, 2.2μF, ±20%, 15 Vdc	12954	D2R2GS1D15M
C23	1-900098-002	Capacitor, fixed, mica, 2 pF, ±0.5 pF, 300 Vdc	04062	DM5 CC020D
C24	1-900117-001	Capacitor, variable, ceramic, 2.8 pF to 10 pF, 250 Vdc	91293	9312

Table 8-54. Parts List for Measure Broadband Amplifier Assembly, A22A1 (Cont.)

Ref. Desig.	Singer Part No.	Description	Mfr. Code No.	Mfr. Part No.
C25	1-900117-002	Capacitor, variable, ceramic, 3.3 pF to 18 pF, 250 Vdc	91293	9313
C26	1-900115-005	Capacitor, fixed, tantalum, 2.2μF, ±20%, 15 Vdc	12954	D2R2GS1D15M
C27	1-900077-002	Capacitor, fixed, ceramic 0.01 μF, ±20%, 100 Vdc	56289	TG-S10
C28	1-900077-002	Capacitor, fixed, ceramic, 0.01 μF, ±20%, 100 Vdc	56289	TG-S10
C29	1-900003-050	Capacitor, fixed, mica, 560 pF, ±5%, 300 Vdc	72136	DM15 FA561J
C30	1-900098-038	Capacitor, fixed, mica, 200 pF, ±5%, 100 V	04062	DM5 FA201J
J1	1-950031-003	Connector, jack, 1 pin	00779	2-332070-5
J2	1-950031-003	Connector, jack, 3 pins	00779	2-332070-5
J3	1-950031-003	Connector, jack, 3 pins	00779	2-332070-5
J4	1-950031-003	Connector, jack, 3 pins	00779	2-332070-5
L1	1-403928-015	Inductor, fixed, 15 turns	88869	
L2	1-403928-005	Inductor, fixed, 5 turns	88869	
L3	1-403928-015	Inductor, fixed, 15 turns	88869	
L4	1-403928-005	Inductor, fixed, 5 turns	88869	
L5	1-403928-015	Inductor, fixed, 15 turns	88869	
L6	1-403928-005	Inductor, fixed, 5 turns	88869	
L7	2-403855-002	Inductor, variable, 1.28μH to 1.73μH	88869	
Q1	1-958000-002	Transistor, silicon, PNP	04713	2N3906-5
Q2	1-958101-001	Transistor, silicon, NPN	04713	2N6304
Q3	1-958000-002	Transistor, silicon, PNP	04713	2N3906-5
Q4	1-958101-001	Transistor, silicon, NPN	04713	2N6304
Q5	1-958000-002	Transistor, silicon, PNP	04713	2N3906-5
Q6	1-958101-001	Transistor, silicon, NPN	04713	2N6304
Q7	1-958000-001	Transistor, silicon, NPN	04713	2N3904-5
R1	1-945000-040	Resistor, fixed, composition, 1.8 kilohm, ±10%, 1/4 W	01121	CB1821
R2	1-945000-022	Resistor, fixed, composition, 56 ohm, ±10%, 1/4 W	01121	CB5601
R3	1-945000-047	Resistor, fixed, composition, 6.8 kilohm, ±10%, 1/4 W	01121	CB6821
R4	1-945000-041	Resistor, fixed, composition, 2.2 kilohm, ±10%, 1/4 W	01121	CB2221
R5	1-945000-027	Resistor, fixed, composition, 150 ohm, ±10%, 1/4 W	01121	CB1511

Table 8-54. Parts List for Measure Broadband Amplifier Assembly, A22A1 (Cont.)

Ref. Desig.	Singer Part No.	Description	Mfr. Code No.	Mfr. Part No.
R6	1-945000-150	Resistor, fixed, composition, 330 ohm, ±5%, 1/4 W	01121	CB3315
R7	1-945000-013	Resistor, fixed, composition, 10 ohm, ±10%, 1/4 W	01121	CB1001
R8	1-945000-114	Resistor, fixed, composition, 10 ohm, ±5%, 1/4 W	01121	CB1005
R9	1-945000-040	Resistor, fixed, composition, 1.8 kilohm, ±10%, 1/4 W	01121	CB1821
R10	1-945000-022	Resistor, fixed, composition, 56 ohm, ±10%, 1/4 W	01121	CB5601
R11	1-945000-047	Resistor, fixed, composition, 6.8 kilohm, ±10%, 1/4 W	01121	CB6821
R12	1-945000-041	Resistor, fixed, composition, 2.2 kilohm, ±10%, 1/4 W	01121	CB2221
R13	1-945000-027	Resistor, fixed, composition, 150 ohm, ±10%, 1/4 W	01121	CB1511
R14	1-945000-150	Resistor, fixed, composition, 330 ohm, ±5%, 1/4 W	01121	CB3315
R15	1-945000-114	Resistor, fixed, composition, 10 ohm, ±5%, 1/4 W	01121	CB1005
R16	1-945000-040	Resistor, fixed, composition, 1.8 kilohm, ±10%, 1/4 W	01121	CB1821
R17	1-945000-022	Resistor, fixed, composition, 56 ohm, ±10%, 1/4 W	01121	CB5601
R18	1-945000-047	Resistor, fixed, composition, 6.8 kilohm, ±10%, 1/4 W	01121	CB6821
R19	1-945000-041	Resistor, fixed, composition, 2.2 kilohm, ±10%, 1/4 W	01121	CB2221
R20	1-945000-027	Resistor, fixed, composition, 150 ohm, ±10%, 1/4 W	01121	CB1511
R21	1-945000-150	Resistor, fixed, composition, 330 ohm, ±5%, 1/4 W	01121	CB3315
R22	1-945000-114	Resistor, fixed, composition, 10 ohm, ±5%, 1/4 W	01121	CB1005
R23	1-945000-149	Resistor, fixed, composition, 300 ohm, ±5%, 1/4 W	01121	CB3015
R24	1-945000-120	Resistor, fixed, composition, 18 ohm, ±5%, 1/4 W	01121	CB1805
R25	1-945000-149	Resistor, fixed, composition, 300 ohm, ±5%, 1/4 W	01121	CB3015
R26	1-945000-022	Resistor, fixed, composition, 56 ohm, ±10%, 1/4 W	01121	CB5601
R27	1-945000-025	Resistor, fixed, composition, 100 ohm, ±10%, 1/4 W	01121	CB1011
R28	1-945000-025	Resistor, fixed, composition, 100 ohm, ±10%, 1/4 W	01121	CB1011
R29	1-945000-050	Resistor, fixed, composition, 12 kilohm, ±10%, 1/4 W	01121	CB1231

Table 8-54. Parts List for Measure Broadband Amplifier Assembly, A22A1 (Cont.)

Ref. Desig.	Singer Part No.	Description	Mfr. Code No.	Mfr. Part No.
R30	1-945000-043	Resistor, fixed, composition, 3.3 kilohm, ±10%, 1/4 W	01121	CB3321
R31	1-945000-025	Resistor, fixed, composition, 100 ohm, ±10%, 1/4 W	01121	CB1011
Z1	1-403915-005	Mixer, doubly balanced	88869	

Section IX

SCHEMATIC DIAGRAMS

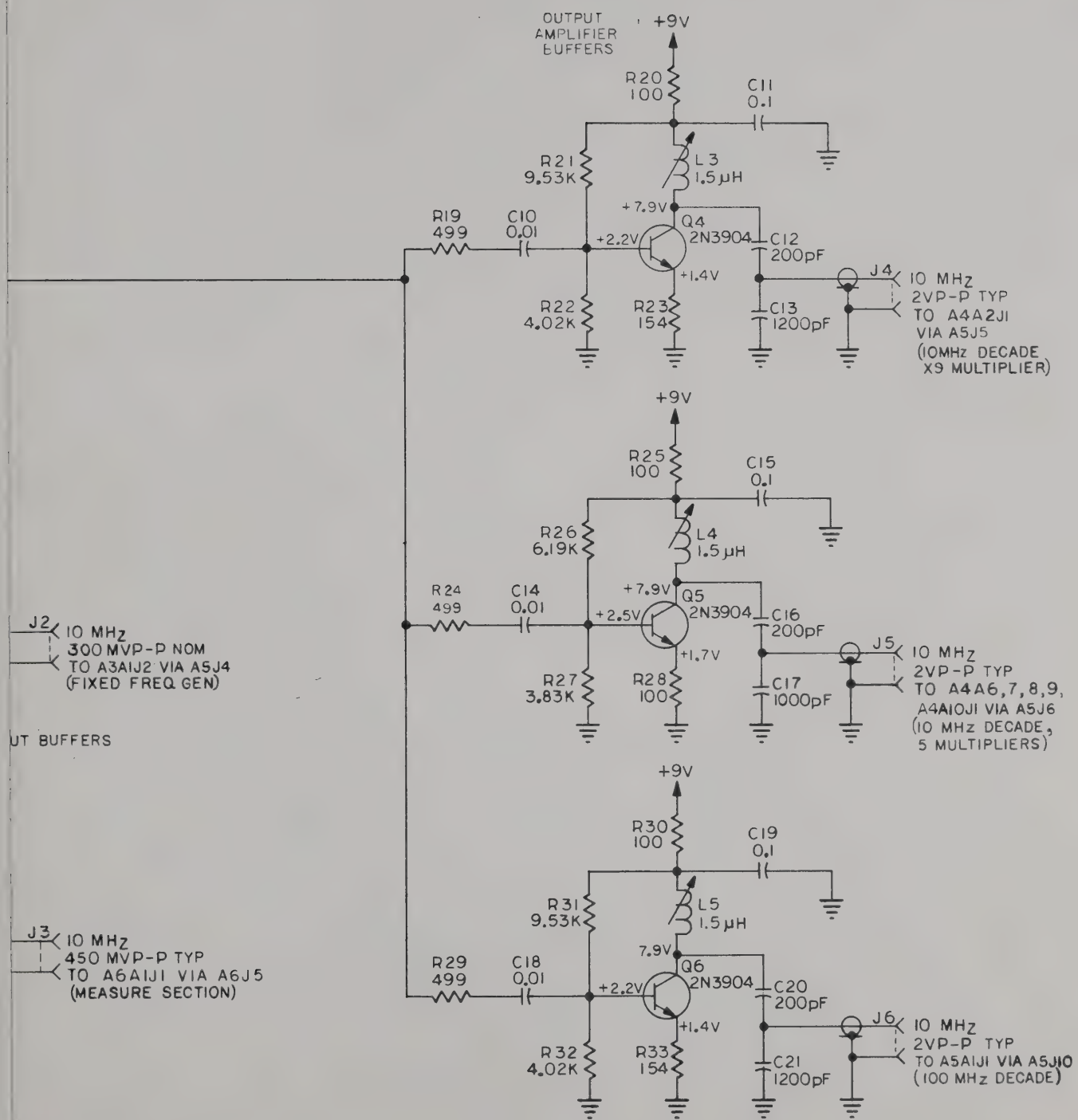

Figure 9-1. Schematic Diagram, Amplifier, 10 MHz Buffer, A1 Dwg No. 4-501508-001 (B)

1. PARTIAL REFERENCE DESIGNATORS ARE SHOWN; FOR COMPLETE DESIGNATION PREFIX WITH ASSY. REF. DES. A1, EXAMPLE R7 IS A1R7.
2. ALL RESISTORS VALUES ARE IN OHMS ±1%, 1/8W.
3. ALL CAPACITORS VALUES ARE IN MICROFARADS
4. DC VOLTAGES MEASURED WITH SIGNAL PRESENT

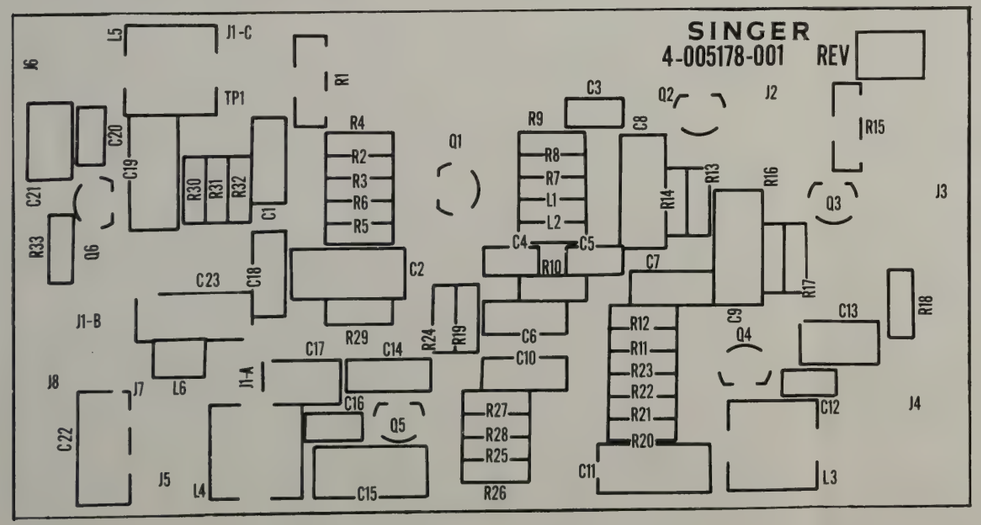

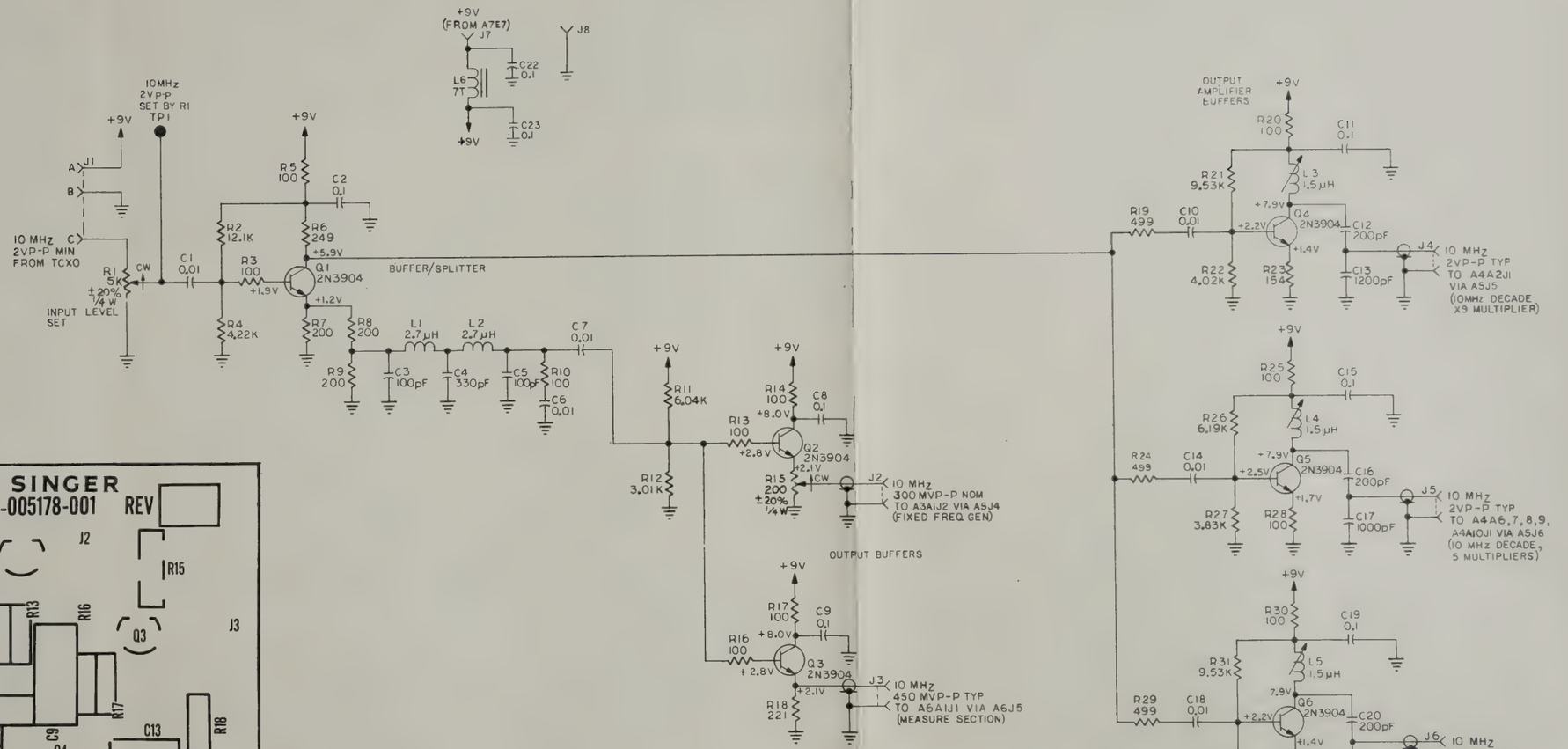

Figure 9-1. Schematic Diagram, Amplifier, 10 MHz Buffer, A1 Dwg No. 4-501508-001 (B)

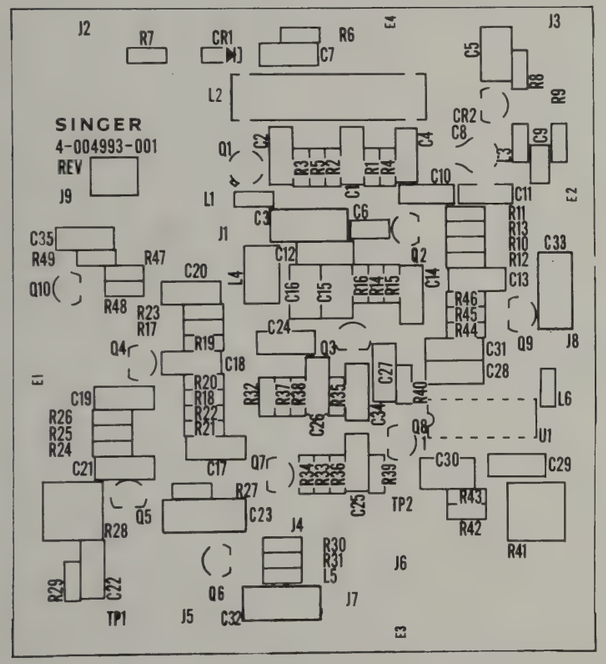

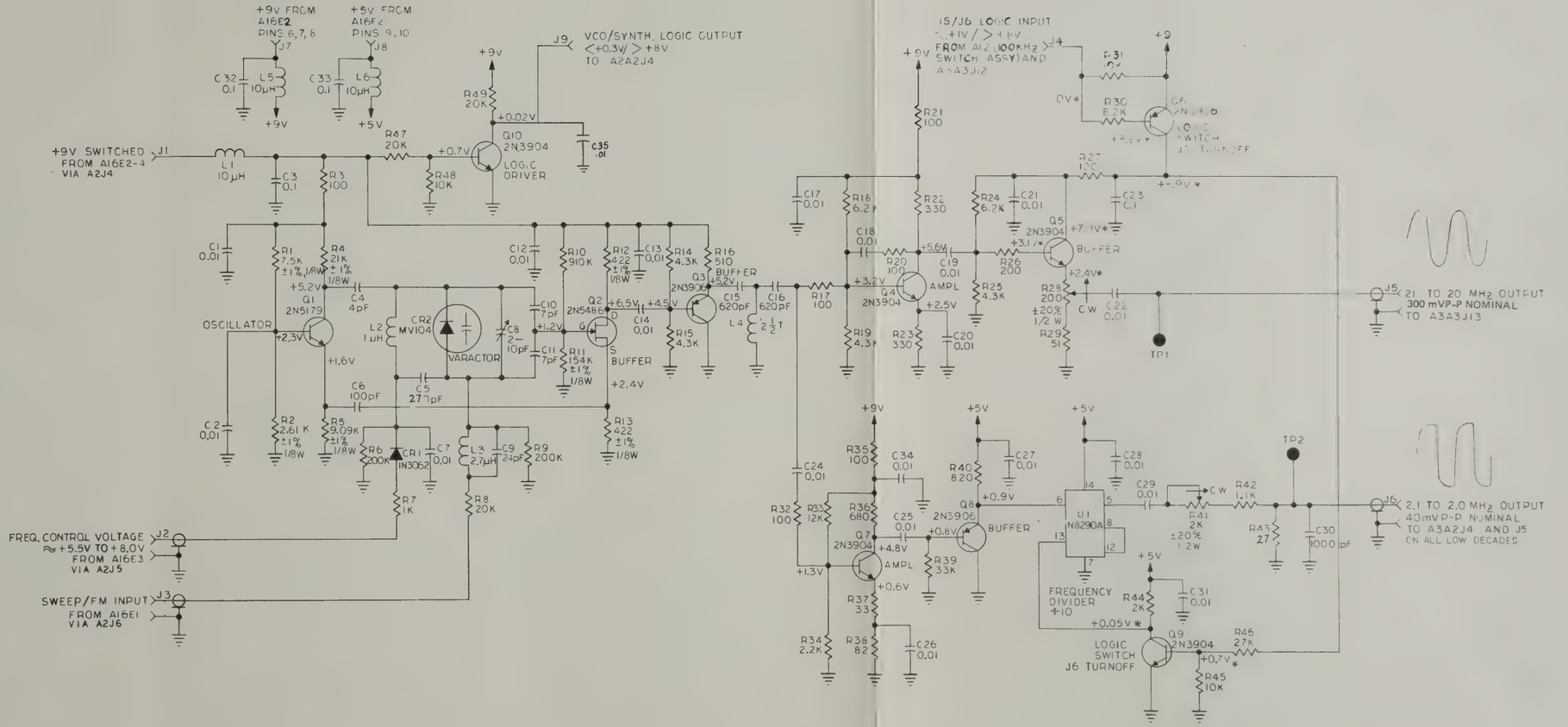
+9V FROM A16E2 PINS 6, 7, 8
+5V FROM A16F2 PINS 9, 10
J9 VCO/SYNTH. LOGIC OUTPUT <+0.3V/>+8V TO A2A2J4
+9V SWITCHED FROM A16E2-4 VIA A2J4
OSCILLATOR
VARACTOR
BUFFER
LOGIC DRIVER
FREQ. CONTROL VOLTAGE ≈+5.5V TO +8.0V FROM A16E3 VIA A2J5
SWEEP/FM INPUT FROM A16E1 VIA A2J6
J5/J6 LOGIC INPUT <+1V/>+8V FROM A12 (100KHz SWITCH ASSY) AND A5A3J12
AMPL
FREQUENCY DIVIDER ÷10
LOGIC SWITCH J6 TURNOFF
J5 2.1 TO 20 MHz OUTPUT 300 mVP-P NOMINAL TO A3A3J13
J6 2.1 TO 2.0 MHz OUTPUT 40 mVP-P NOMINAL TO A3A2J4 AND J5 ON ALL LOW DECADES

1. PARTIAL REFERENCE DESIGNATORS ARE SHOWN, FOR COMPLETE DESIGNATION PREFIX WITH ASSY REF DES A2A1 EXAMPLE R7 IS A2A1R7
2. ALL CAPACITORS VALUES ARE IN MICROFARADS
3. ALL RESISTORS VALUES ARE IN OHMS, ±5%, 1/4W
4. DC VOLTAGES (*) MEASURED WITH J4 GROUNDED

Figure 9-2. Schematic Diagram
VCO, A2A1
Dwg No. 4-501451-001 (B)

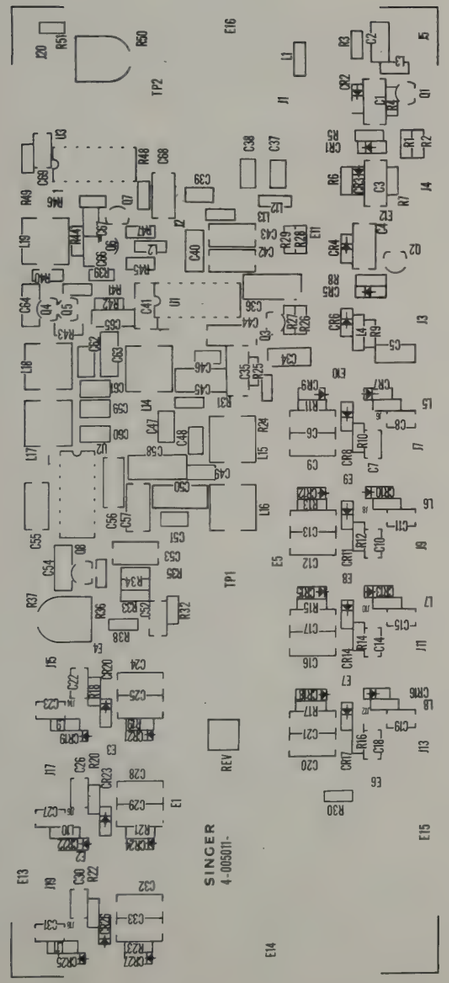

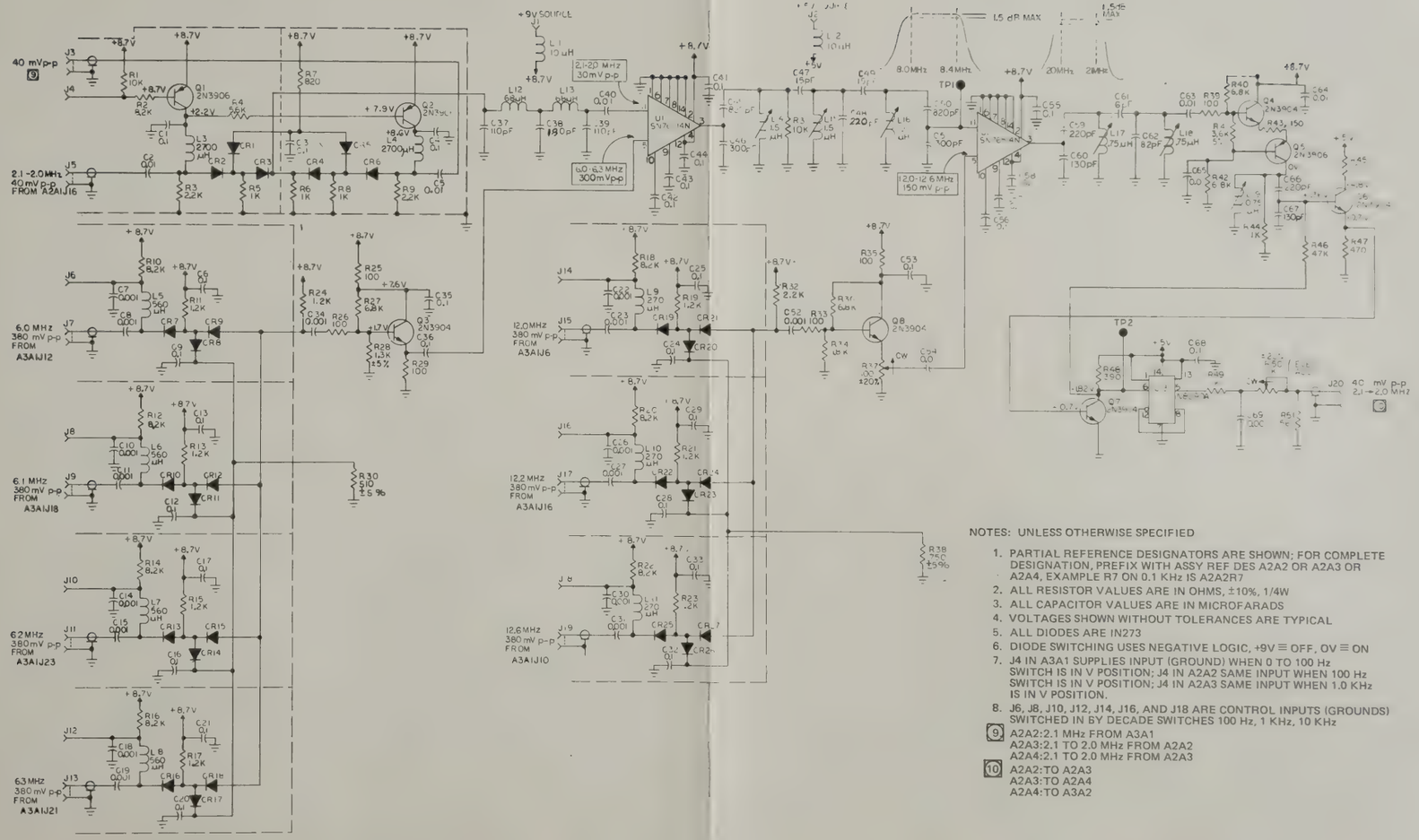

NOTES: UNLESS OTHERWISE SPECIFIED

1. PARTIAL REFERENCE DESIGNATORS ARE SHOWN; FOR COMPLETE DESIGNATION, PREFIX WITH ASSY REF DES A2A2 OR A2A3 OR A2A4, EXAMPLE R7 ON 0.1 KHz IS A2A2R7
2. ALL RESISTOR VALUES ARE IN OHMS, ±10%, 1/4W
3. ALL CAPACITOR VALUES ARE IN MICROFARADS
4. VOLTAGES SHOWN WITHOUT TOLERANCES ARE TYPICAL
5. ALL DIODES ARE IN273
6. DIODE SWITCHING USES NEGATIVE LOGIC, +9V ≡ OFF, 0V ≡ ON
7. J4 IN A3A1 SUPPLIES INPUT (GROUND) WHEN 0 TO 100 Hz SWITCH IS IN V POSITION; J4 IN A2A2 SAME INPUT WHEN 100 Hz SWITCH IS IN V POSITION; J4 IN A2A3 SAME INPUT WHEN 1.0 KHz IS IN V POSITION.
8. J6, J8, J10, J12, J14, J16, AND J18 ARE CONTROL INPUTS (GROUNDS) SWITCHED IN BY DECADE SWITCHES 100 Hz, 1 KHz, 10 KHz

(9) A2A2:2.1 MHz FROM A3A1
A2A3:2.1 TO 2.0 MHz FROM A2A2
A2A4:2.1 TO 2.0 MHz FROM A2A3

(10) A2A2:TO A2A3
A2A3:TO A2A4
A2A4:TO A3A2

Figure 9-3. Schematic Diagram
0.1 kHz, 1.0 kHz, 10 kHz Decade, A2A2, A2A3, A2A4
Dwg No. 4-501468-001

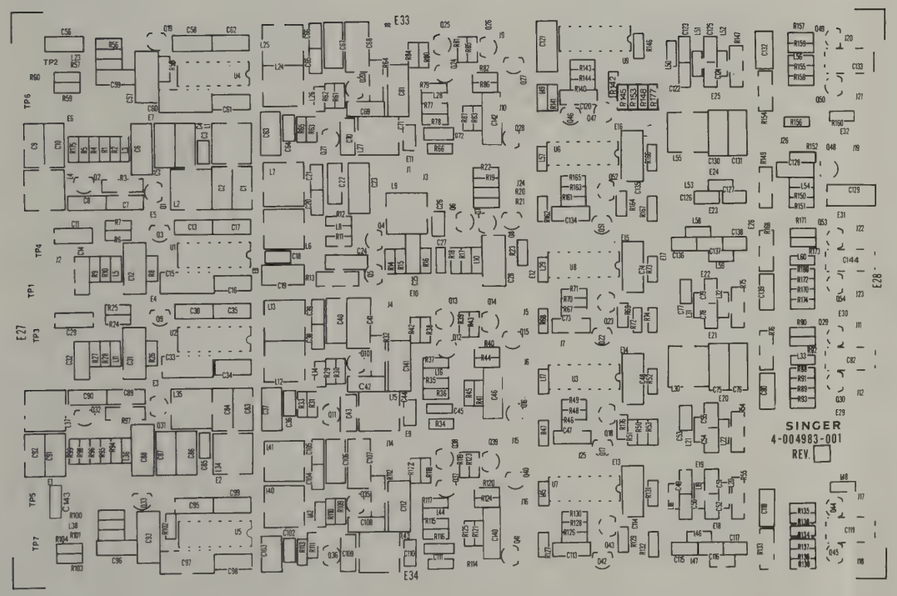

1. PARTIAL REFERENCE DESIGNATORS ARE SHOWN; FOR COMPLETE DESIGNATION PREFIX WITH ASSY DES A3A1, EXAMPLE: C3 IS A3A1C3
2. ALL RESISTOR VALUES ARE IN OHMS ±10%, 1/4W
3. ALL CAPACITOR VALUES ARE IN MICROFARADS
4. ALL TRANSISTORS ARE 2N3904
5. ALL VOLTAGES ARE TYPICAL WITH SIGNAL APPLIED

Figure 9-4. Schematic Diagram
Generator, Fixed Frequency, A3A1
Dwg No. 4-501431-001 (B)
(Sheet 1 of 4)

9-9/9-10

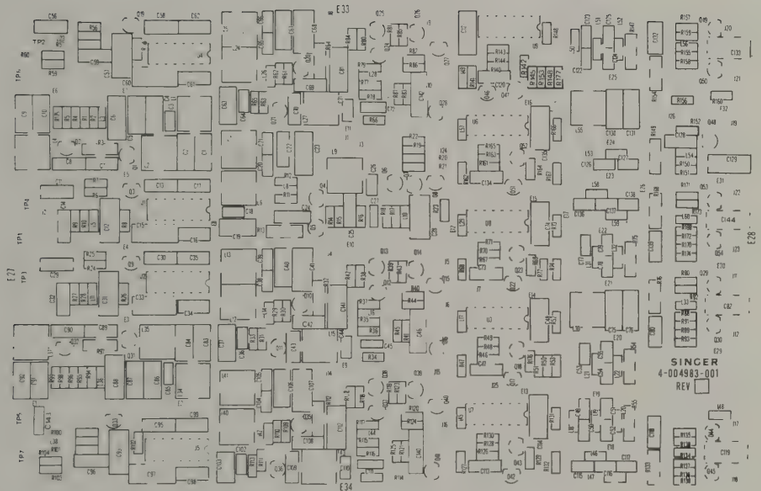

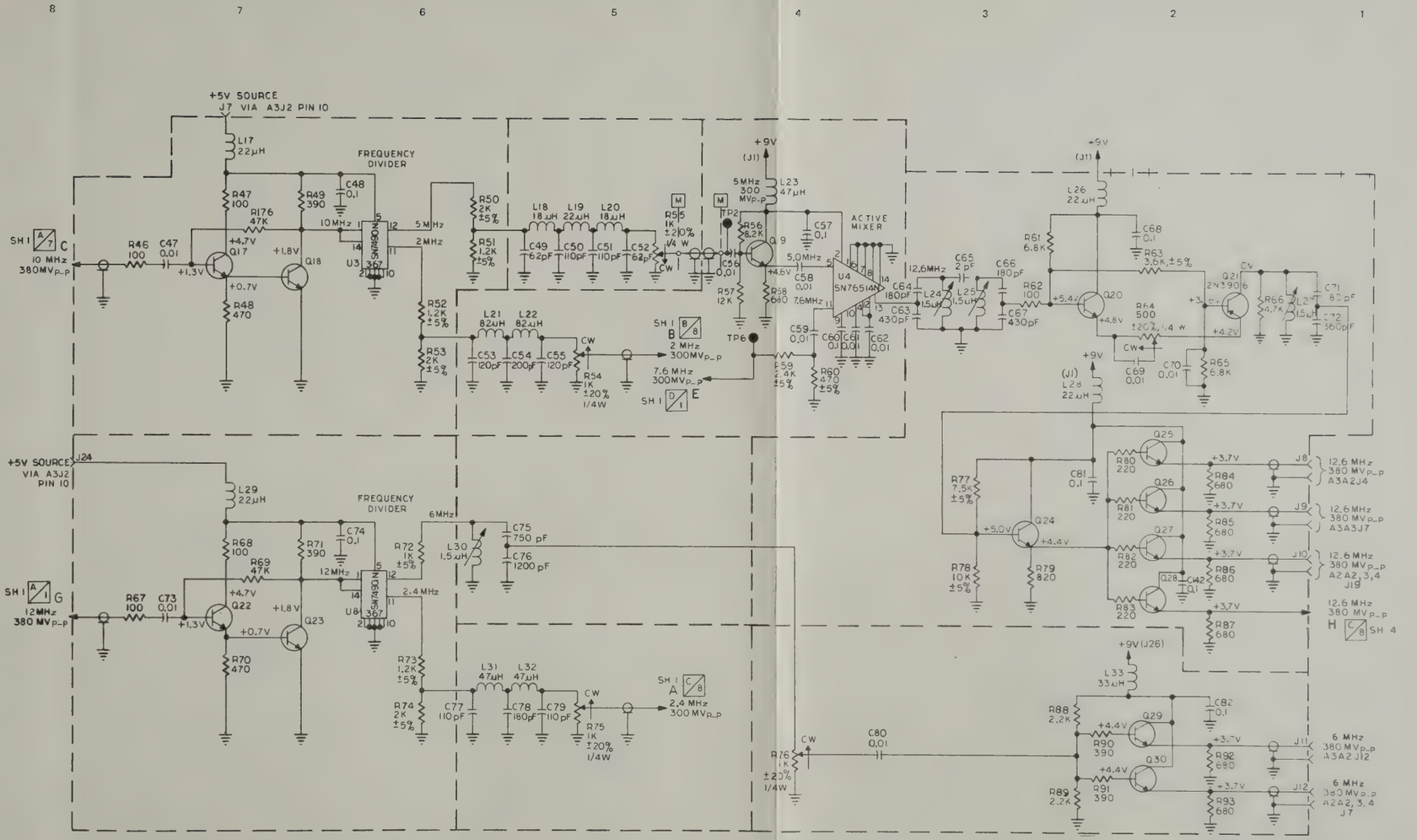

Figure 9-4. Schematic Diagram
Generator, Fixed Frequency, A3A1
Dwg No. 4-501431-001 (B)
(Sheet 2 of 4)

9-11/9-12

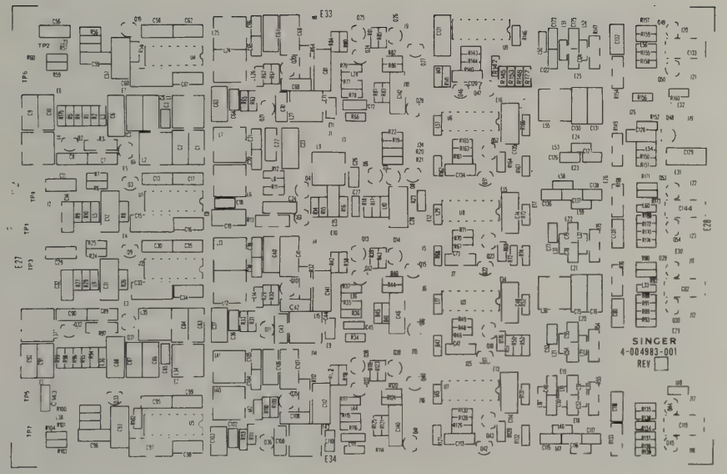

Figure 9-4. Schematic Diagram
Generator, Fixed Frequency, A3A1
Dwg No. 4-501431-001 (B)
(Sheet 3 of 4)

9-13/9-14

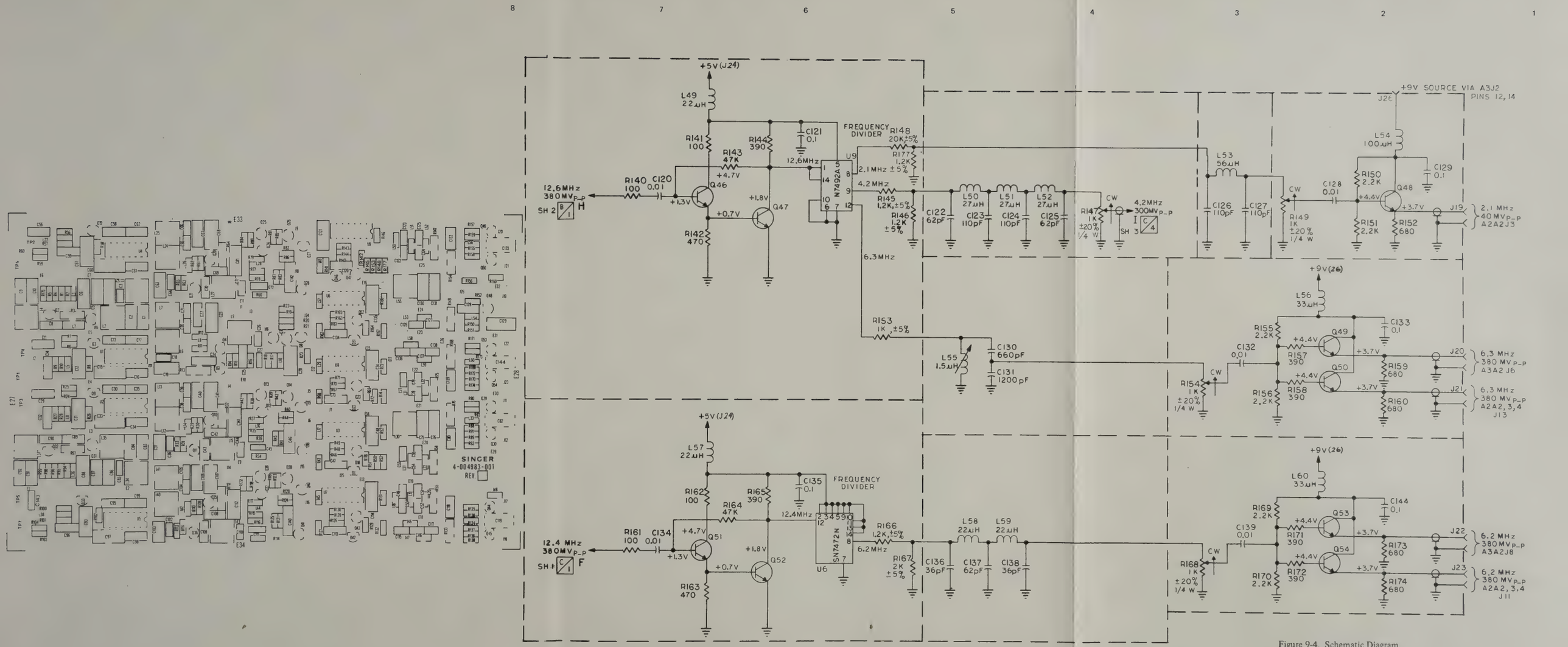

Figure 9-4. Schematic Diagram
Generator, Fixed Frequency, A3A1
Dwg No. 4-501431-001 (B)
(Sheet 4 of 4)

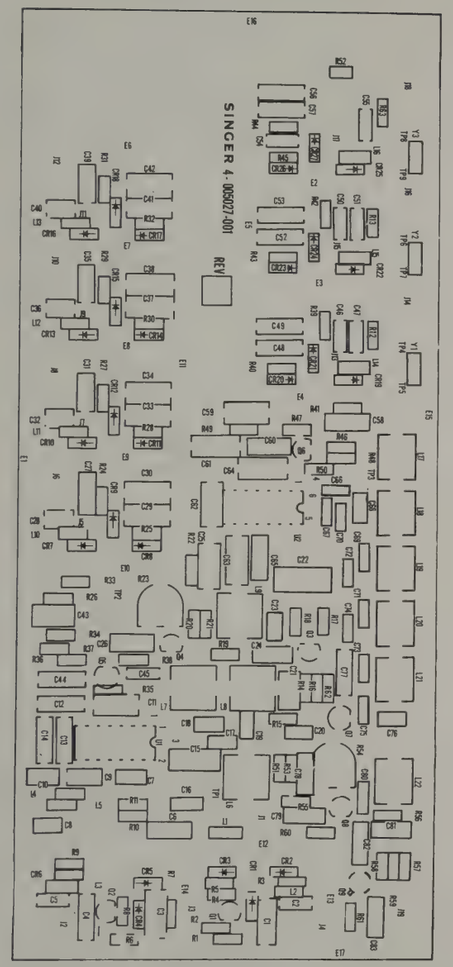

1. PARTIAL REFERENCE DESIGNATORS ARE SHOWN; FOR COMPLETE DESIGNATION PREFIX WITH ASSY DES A3A2. EXAMPLE: A3A2C6
2. ALL RESISTOR VALUES ARE IN OHMS ±10% 1/4 W
3. ALL CAPACITOR VALUES ARE IN MICROFARADS
4. ALL DIODES ARE IN273.
5. DC VOLTAGES SHOWN ARE MEASURED WITH NO SIGNAL AND ALL SWITCHES J3, J5, J7, J9, J11, J13, J15 AND J17 OPEN CIRCUIT
6. ALL AC VOLTAGES ARE SINE WAVE
7. J3 SUPPLIES INPUT FROM A3A4 WHEN 10 KHz SWITCH IS IN V POSITION.
8. J5, J7, J9, J11, J13, J15, J17 ARE CONTROL INPUTS FROM 100 KHz SWITCH.

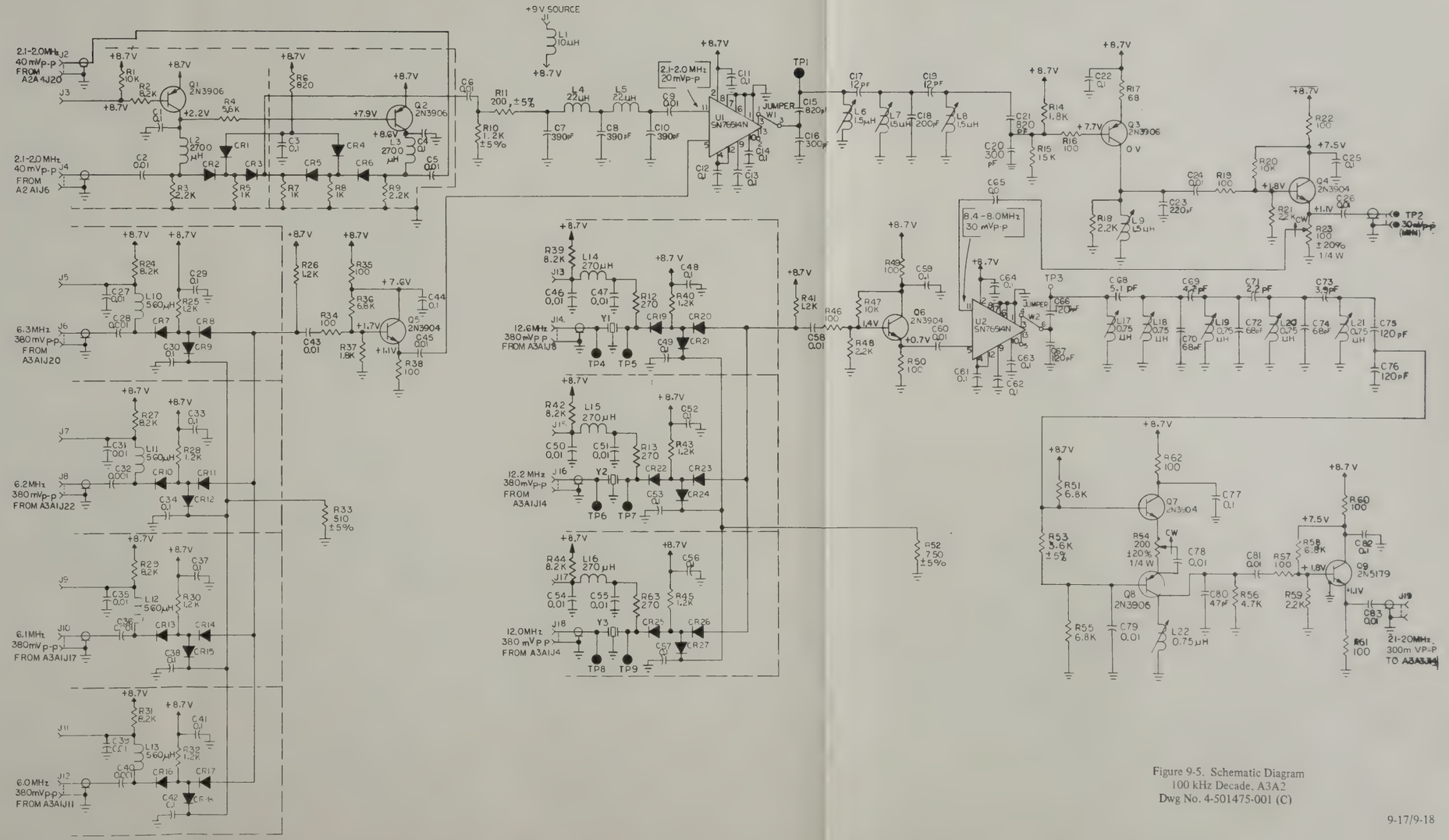

Figure 9-5. Schematic Diagram
100 kHz Decade, A3A2
Dwg No. 4-501475-001 (C)

9-17/9-18

Control Inputs; Frequency Switching Logic (Generate Mode)
Logic Levels: Low <+1V (Closure), High >8.5V

Receptacle	From	Controlled Frequency	1 MHz Switch Position For On (Low)
J1	A3J2 Pin 7	12.0 Z 2	8, 9
J2	A3J2 Pin 13	12.2 Z 2	4, 5, 6, 7
J3	A3J2 Pin 11	12.6 Z 2	0, 1, 2, 3
J8	A3J2 Pin 1	12.0 Z 1	3, 7, 9
J9	A3J2 Pin 4	12.2 Z 1	2, 6, 8
J10	A3J2 Pin 5	12.4 Z 1	1, 5
J11	A3J2 Pin 2	12.6 Z 1	0, 4

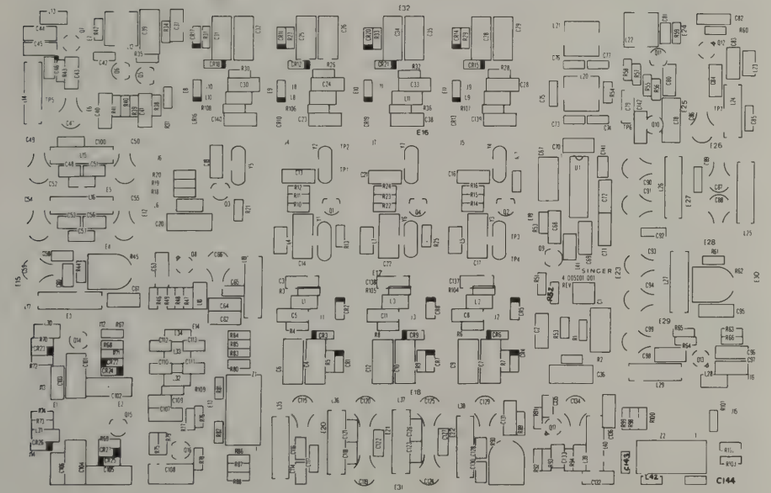

1. PARTIAL REFERENCE DESIGNATORS ARE SHOWN; FOR COMPLETE DESIGNATION PREFIX WITH ASSY DES A3A3. EXAMPLE: C1 IS A3A3C1.
2. ALL RESISTOR VALUES ARE IN OHMS, ±5%, 1/4W.
3. ALL CAPACITOR VALUES ARE IN MICROFARADS.
4. ALL TRANSISTORS ARE 2N3904.
5. ALL DIODES ARE IN273.
6. ALL DC VOLTAGES MEASURED WITH 1 MHz SW IN 0 POSITION AND VCO IN "OUT" POSITION. VOLTAGES MARKED (*) CHANGE AT OTHER SWITCH POSITIONS.

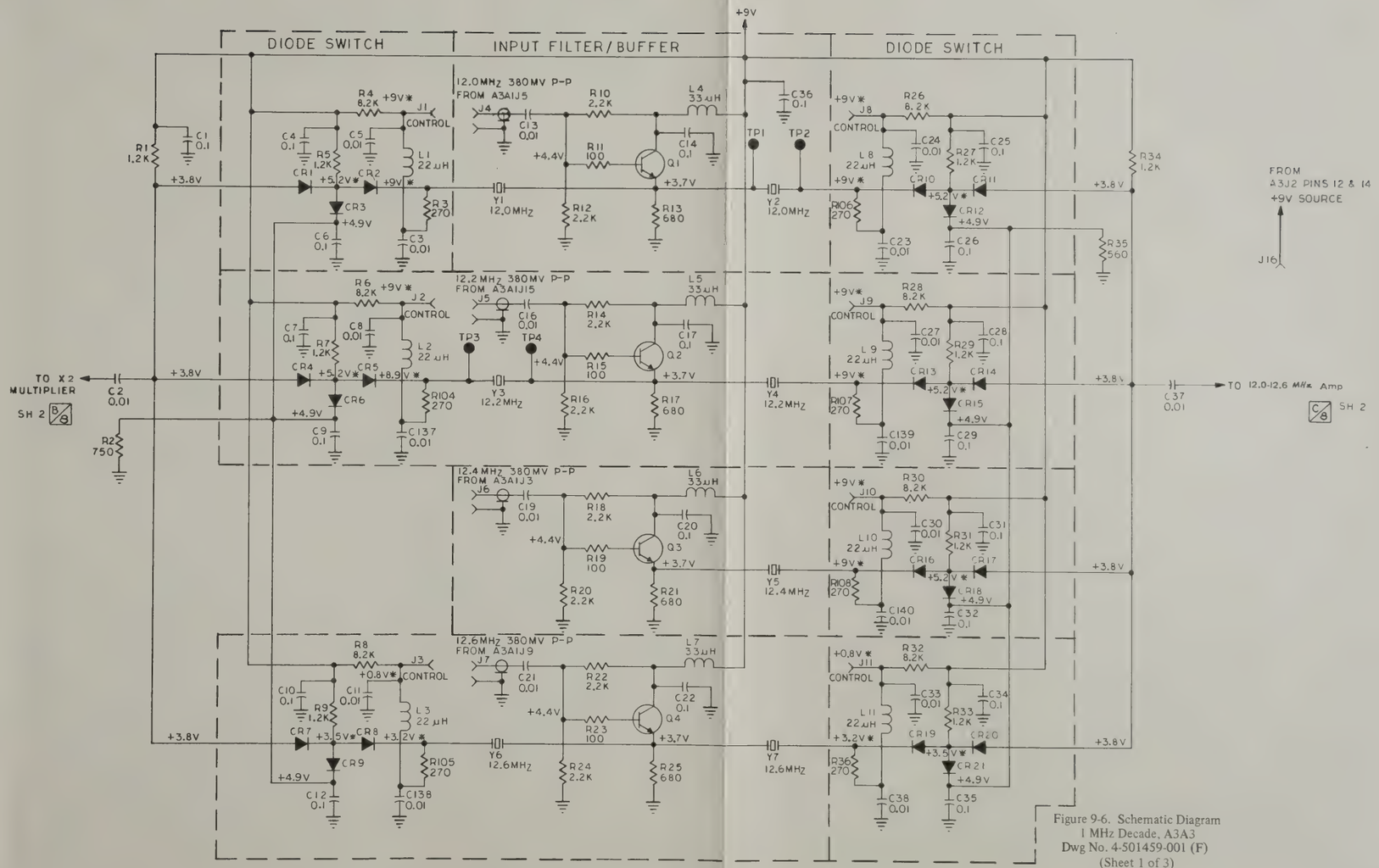

Figure 9-6. Schematic Diagram
1 MHz Decade, A3A3
Dwg No. 4-501459-001 (F)
(Sheet 1 of 3)

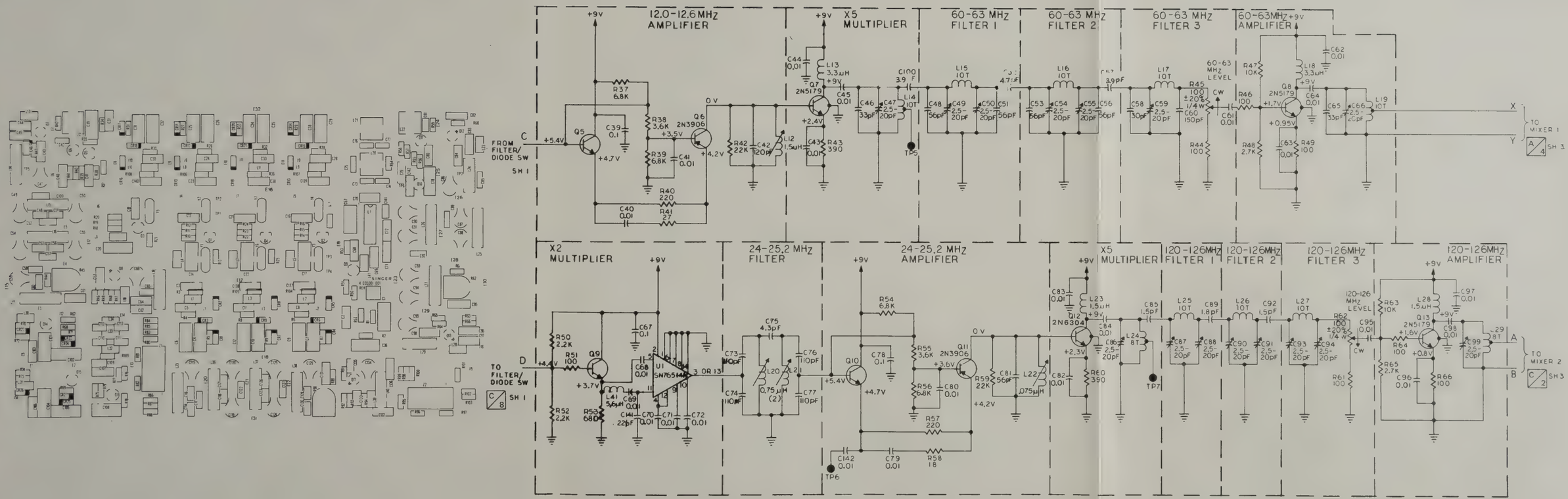

Figure 9-6. Schematic Diagram
1 MHz Decade, A3A3
Dwg No. 4-501459-001 (F)
(Sheet 2 of 3)

9-21/9-22

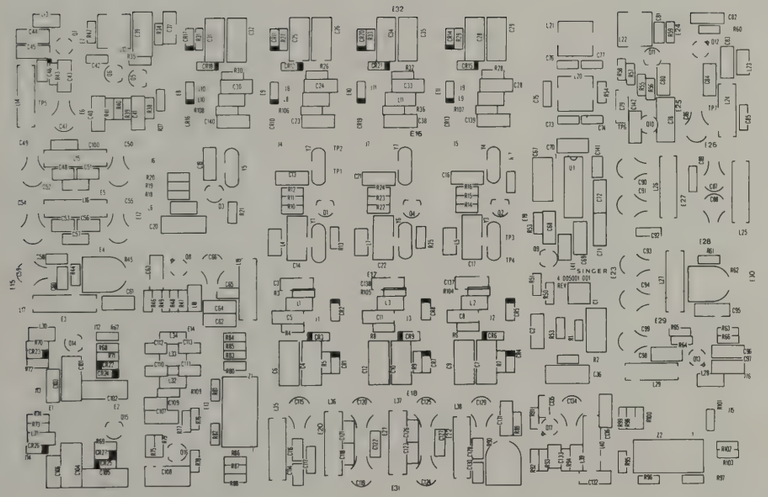

J12 CONTROL INPUT

100 KHz SWITCH POSITION	J12 VOLTAGE	SELECTED INPUT
0 - 9 V	+9 V	J14 (21-20 MHz SYNTH)
	0V	J13 (21-20MHz VCO)

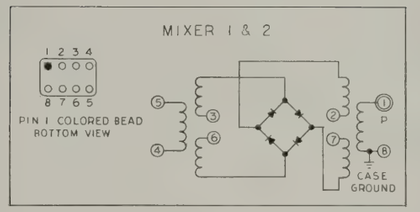

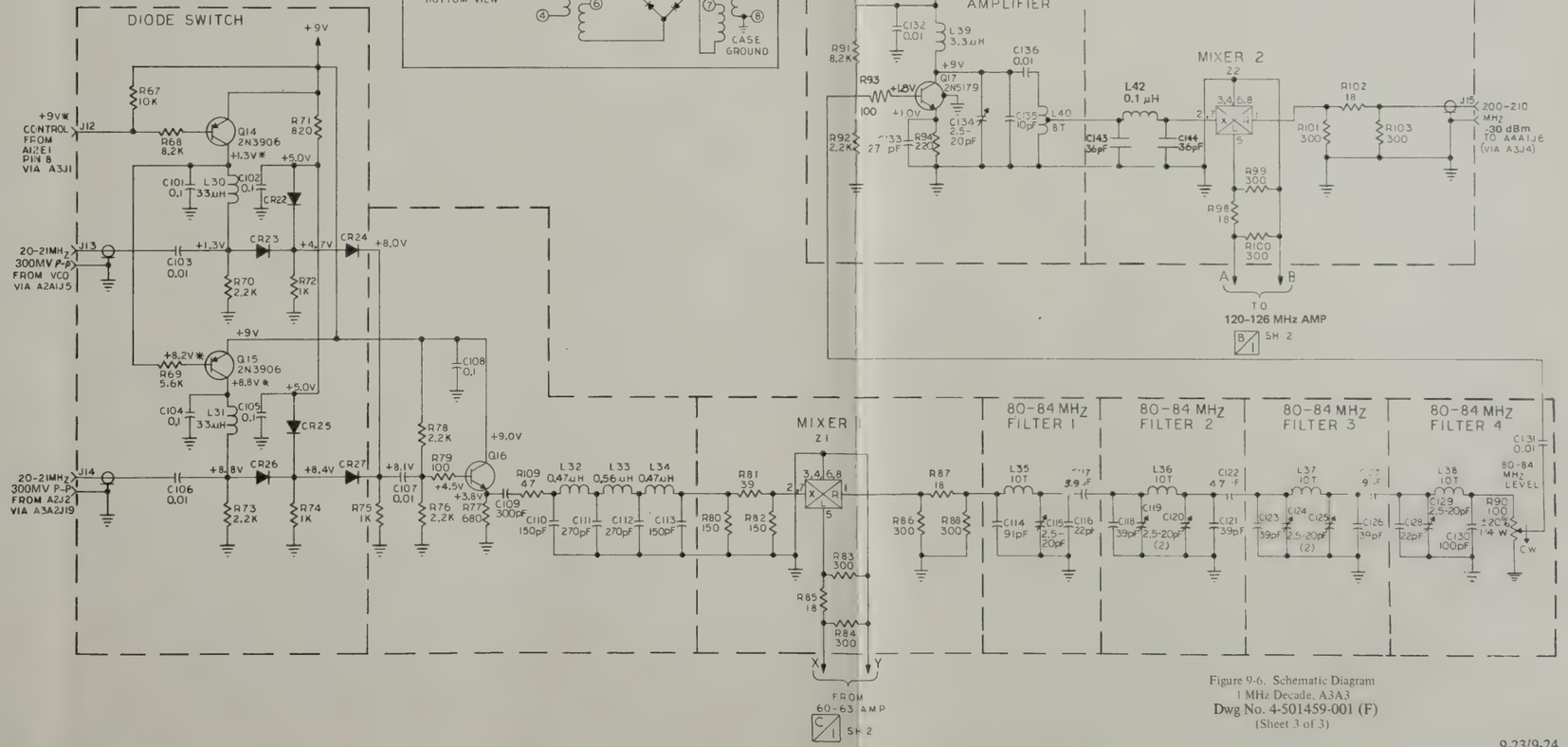

Figure 9-6. Schematic Diagram
1 MHz Decade, A3A3
Dwg No. 4-5011459-001 (F)
(Sheet 3 of 3)

9-23/9-24

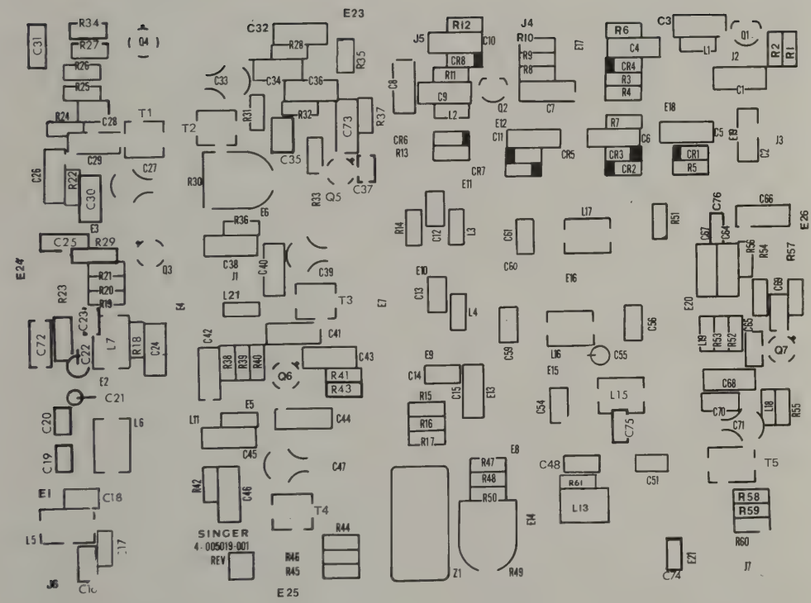

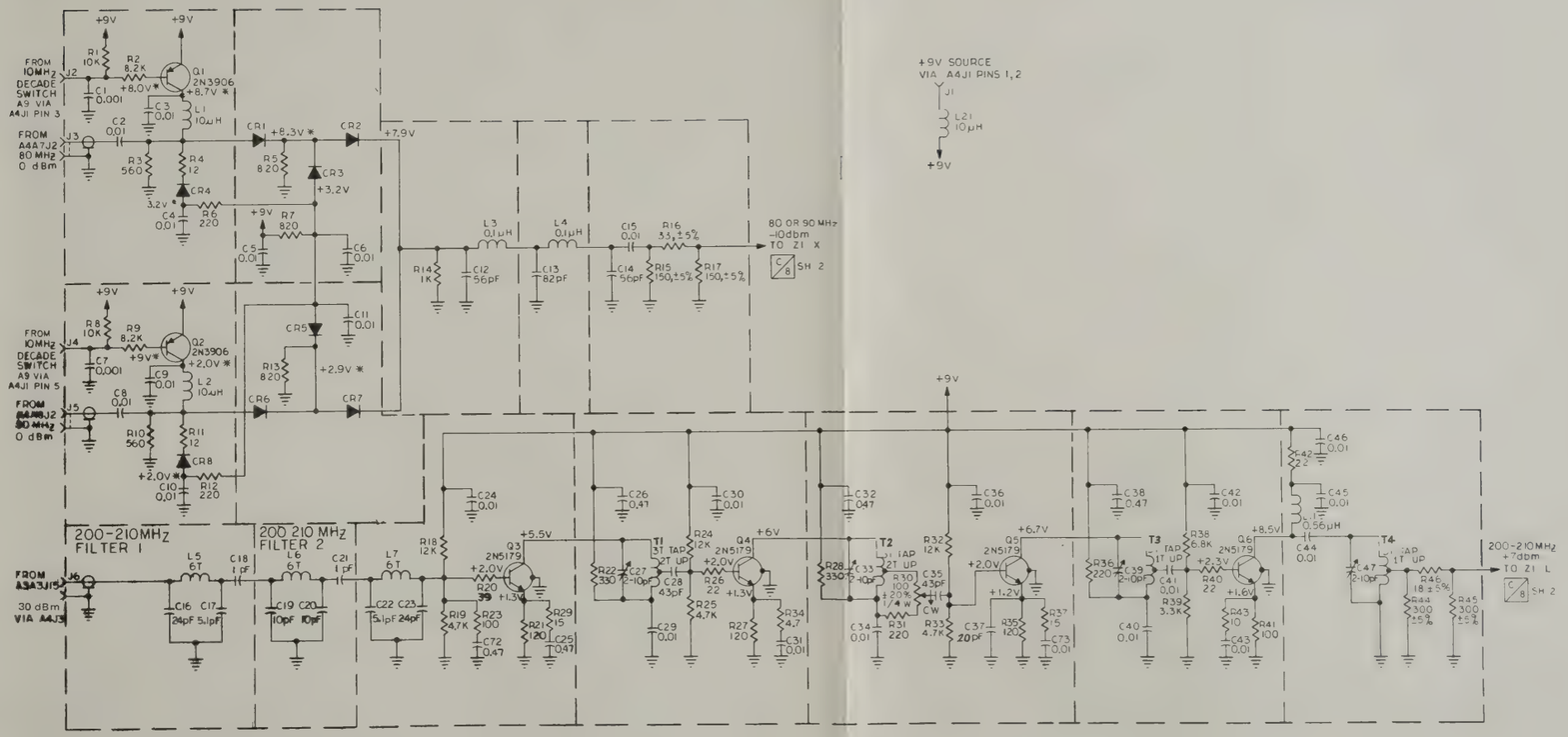
+9V SOURCE VIA A4J1 PINS 1, 2
FROM 10MHz DECADE SWITCH A9 VIA A4J1 PIN 3
FROM A4A7J2 80 MHz 0 dBm
FROM 10MHz DECADE SWITCH A9 VIA A4J1 PIN 5
FROM A4A3J2 30 MHz 0 dBm VIA A4J3
200-210MHz FILTER 1
200 210 MHz FILTER 2
80 OR 90 MHz -10dbm TO Z1 X
200-210MHz +7dbm TO Z1 L
SH 2
SH 8

NOTES: UNLESS OTHERWISE SPECIFIED

1. PARTIAL REFERENCE DESIGNATORS ARE SHOWN. FOR COMPLETE DESIGNATION PREFIX WITH ASSY REF DES A4A1. EXAMPLE: R1 IS A4A1R1.
2. ALL RESISTORS VALUES ARE IN OHMS, ±10%, 1/4 WATT
3. ALL CAPACITORS VALUES ARE IN MICROFARADS.
4. ALL DIODES ARE IN273.
5. ALL DC VOLTAGES MEASURED WITH J2 GND AND J4 OPEN (0 POSITION ON 10 MHz FREQUENCY SELECTOR 80 MHz ACTIVATED) VOLTAGES MARKED (*) CHANGE AT OTHER SWITCH POSITIONS.

Figure 9-7. Schematic Diagram
Input Diode Switch, Mixer, and Filter, A4A1
Dwg No. 4-501432-001 (C)
(Sheet 1 of 2)

9-25/9-26

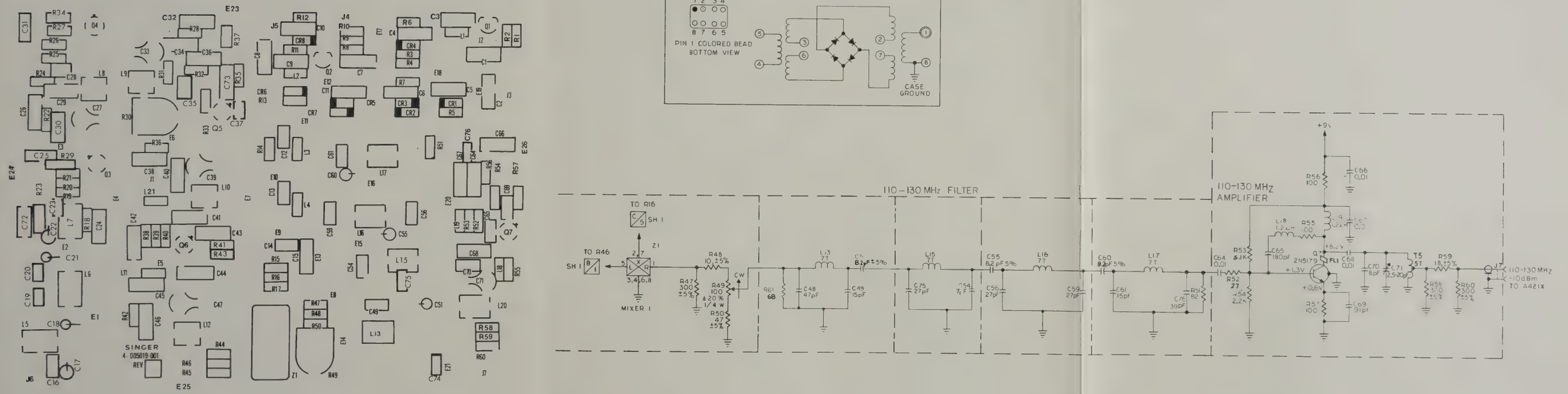

Figure 9-7. Schematic Diagram
Input Diode Switch, Mixer, and Filter, A4A1
Dwg No. 4-501432-001(C)
(Sheet 2 of 2)

NOTES: UNLESS OTHERWISE SPECIFIED

1. ALL RESISTORS ARE IN OHMS, ±10%, 1/4 W.
2. ALL CAPACITORS ARE IN μF.
3. PARTIAL REFERENCE DESIGNATIONS ARE SHOWN FOR COMPLETE DESIGNATION PREFIX WITH ASSY REF DES A4A2, EXAMPLE: R7 IS A4A2R7.
4. VOLTAGES SHOWN WITHOUT TOLERANCES ARE TYPICAL, INPUTS ARE NOMINAL.
5. DC VOLTAGES MEASURED WITH 10 MEGOHM METER, NO INPUT SIGNAL.
6. ALL WAVEFORMS ARE SINUSOIDAL.

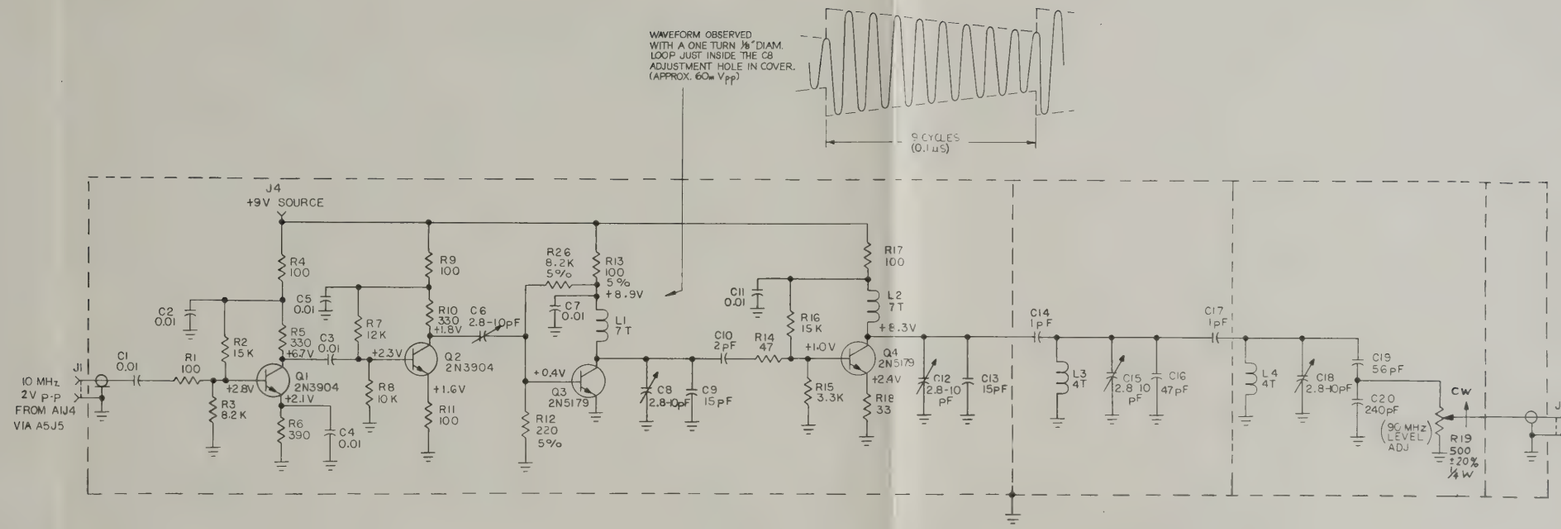

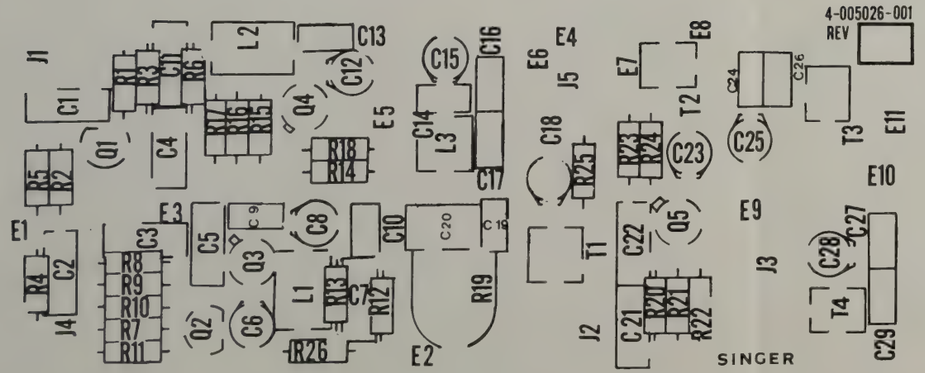

Figure 9-8. Schematic Diagram Multiplier X9 (90 MHz), A4A2 Dwg No. 4-501504-001 (B)

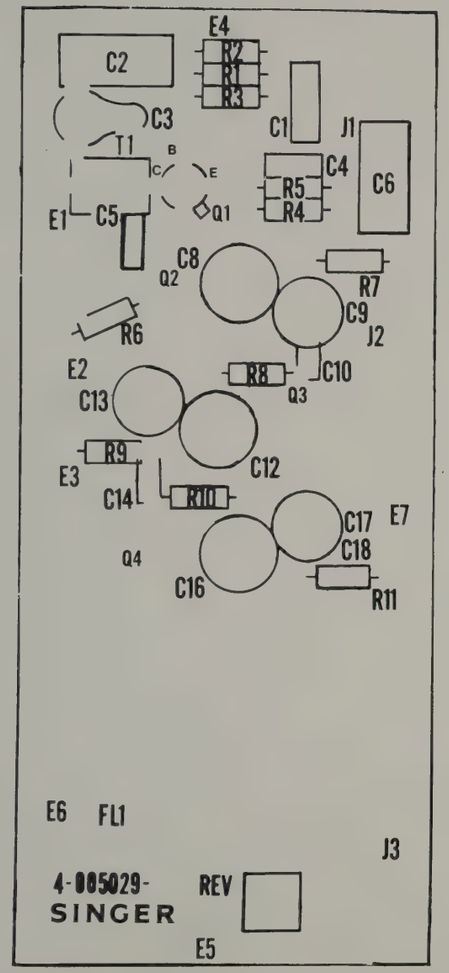

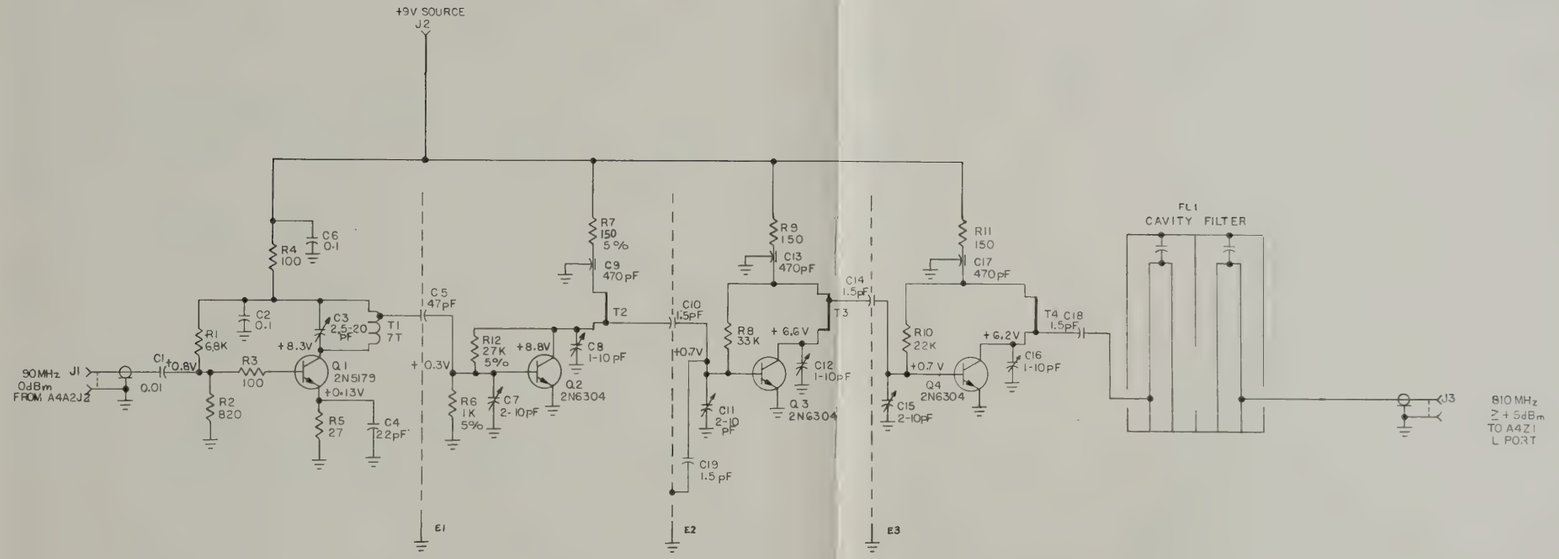

NOTES: UNLESS OTHERWISE SPECIFIED

1. ALL CAPACITORS ARE IN MICROFARADS.
2. ALL RESISTORS ARE IN OHMS, 1/4 W, 10%.
3. PARTIAL REF DESIGNATORS ARE SHOWN, FOR COMPLETE DESIGNATION PREFIX WITH ASSY REF DES A4A3. EXAMPLE: R1 IS A4A3R1.

Figure 9-9. Schematic Diagram
Multiplier X9 (810 MHz), A4A3
Dwg No. 4-501469-001 (A)

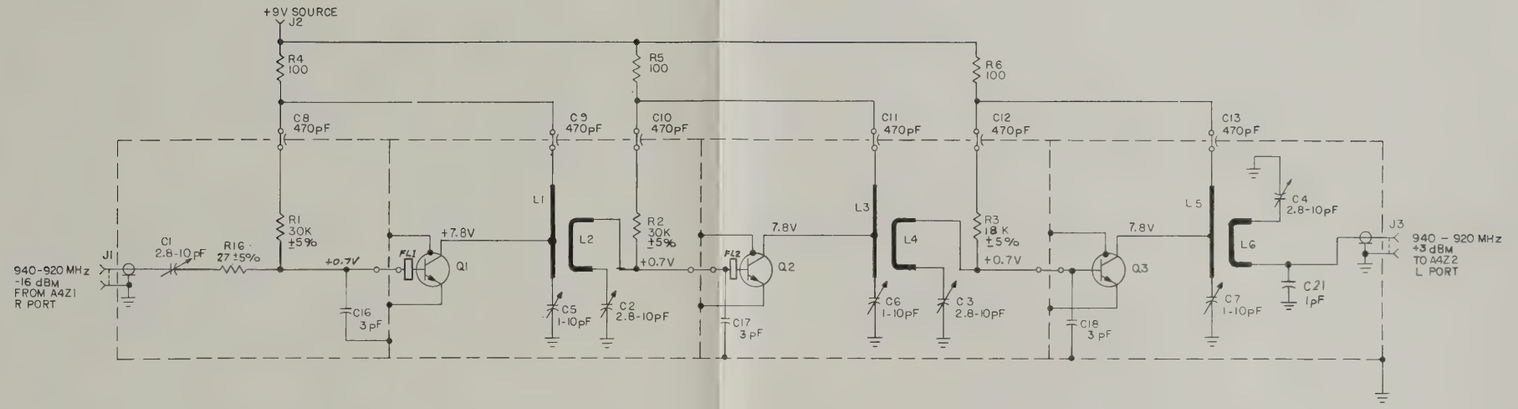

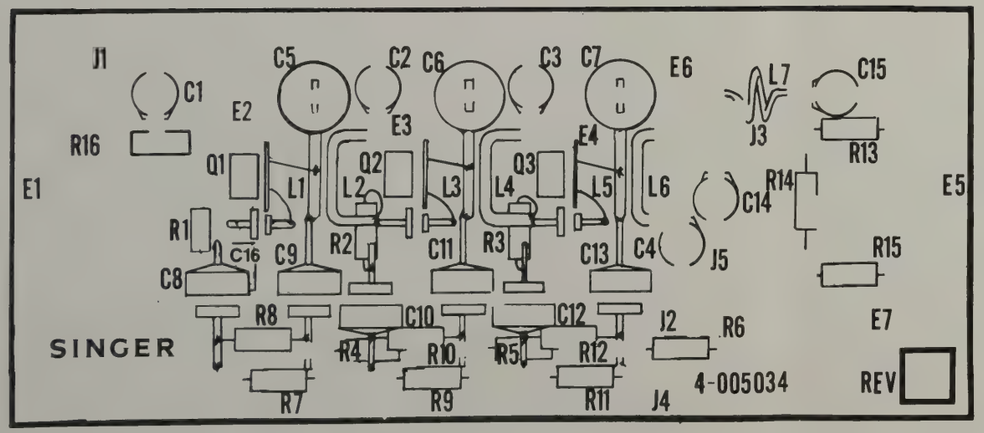

NOTES: UNLESS OTHERWISE SPECIFIED

1. ALL RESISTORS ARE IN OHMS, ±10%, 1/4 W.
2. ALL TRANSISTORS ARE 2N6304.
3. VOLTAGES SHOWN ARE TYPICAL, NO SIGNAL.
4. PARTIAL REFERENCE DESIGNATORS ARE SHOWN; FOR COMPLETE DESIGNATION PREFIX WITH ASSY. REF. DES A4A4. EXAMPLE: R6 IS A4A4R6.

Figure 9-10. Schematic Diagram
930 MHz Amplifier, A4A4
Dwg No. 4-501477-001(D)

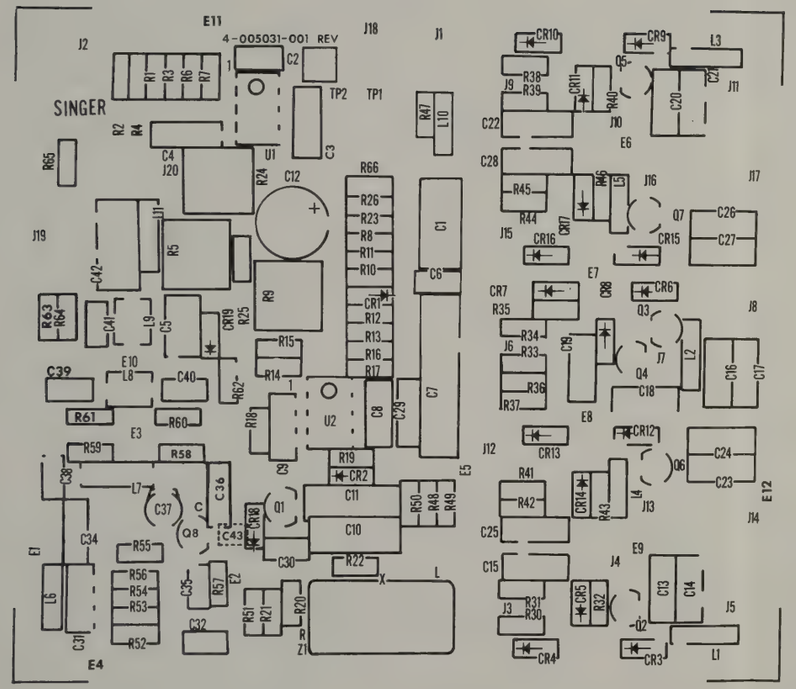

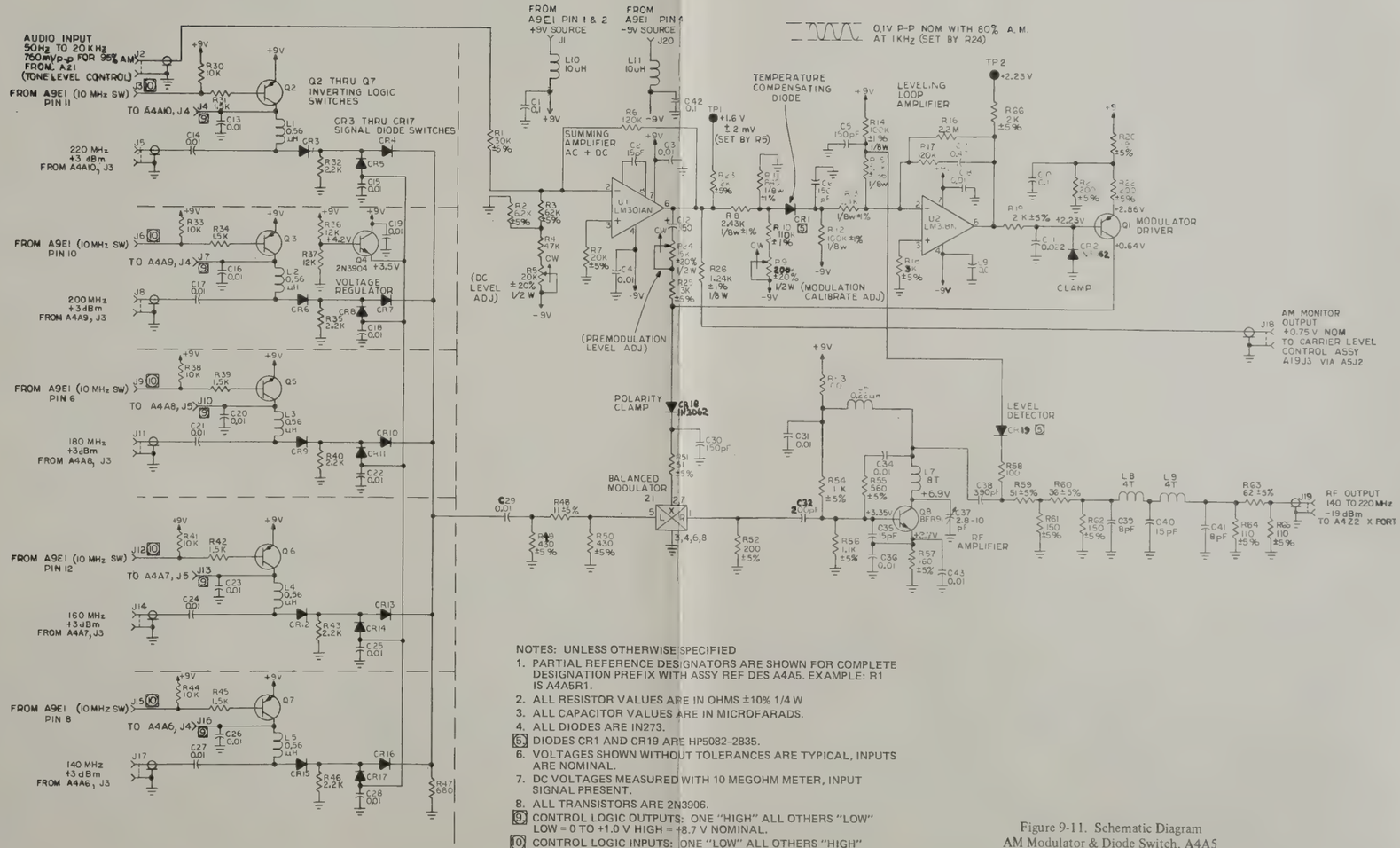
AUDIO INPUT
50Hz TO 20KHz
760mVp-p FOR 95% AM
FROM A21
(TONE LEVEL CONTROL)
FROM A9E1 (10 MHz SW) PIN 11
TO A4A10, J4
220 MHz +3 dBm FROM A4A10, J3
FROM A9E1 (10MHz SW) PIN 10
TO A4A9, J4
200 MHz +3dBm FROM A4A9, J3
FROM A9E1 (10 MHz SW) PIN 6
TO A4A8, J5
180 MHz +3dBm FROM A4A8, J3
FROM A9E1 (10 MHz SW) PIN 12
TO A4A7, J5
160 MHz +3dBm FROM A4A7, J3
FROM A9E1 (10MHz SW) PIN 8
TO A4A6, J4
140 MHz +3 dBm FROM A4A6, J3
Q2 THRU Q7 INVERTING LOGIC SWITCHES
CR3 THRU CR17 SIGNAL DIODE SWITCHES
VOLTAGE REGULATOR
2N3904 +3.5V
FROM A9E1 PIN 1 & 2 +9V SOURCE
FROM A9E1 PIN 4 -9V SOURCE
0.1V P-P NOM WITH 80% A.M. AT 1KHz (SET BY R24)
TEMPERATURE COMPENSATING DIODE
LEVELING LOOP AMPLIFIER
+1.6 V ± 2 mV (SET BY R5)
SUMMING AMPLIFIER AC + DC
(DC LEVEL ADJ)
(PREMODULATION LEVEL ADJ)
(MODULATION CALIBRATE ADJ)
+2.23V
+2.86V
+0.64V
MODULATOR DRIVER
CLAMP
AM MONITOR OUTPUT +0.75 V NOM TO CARRIER LEVEL CONTROL ASSY A19J3 VIA A5J2
POLARITY CLAMP
BALANCED MODULATOR
LEVEL DETECTOR
RF AMPLIFIER
RF OUTPUT 140 TO 220MHz -19 dBm TO A4Z2 X PORT

NOTES: UNLESS OTHERWISE SPECIFIED

1. PARTIAL REFERENCE DESIGNATORS ARE SHOWN FOR COMPLETE DESIGNATION PREFIX WITH ASSY REF DES A4A5. EXAMPLE: R1 IS A4A5R1.
2. ALL RESISTOR VALUES ARE IN OHMS ±10% 1/4 W
3. ALL CAPACITOR VALUES ARE IN MICROFARADS.
4. ALL DIODES ARE IN273.
5. DIODES CR1 AND CR19 ARE HP5082-2835.
6. VOLTAGES SHOWN WITHOUT TOLERANCES ARE TYPICAL, INPUTS ARE NOMINAL.
7. DC VOLTAGES MEASURED WITH 10 MEGOHM METER, INPUT SIGNAL PRESENT.
8. ALL TRANSISTORS ARE 2N3906.
9. CONTROL LOGIC OUTPUTS: ONE "HIGH" ALL OTHERS "LOW" LOW = 0 TO +1.0 V HIGH = +8.7 V NOMINAL.
10. CONTROL LOGIC INPUTS: ONE "LOW" ALL OTHERS "HIGH" LOW = 0 TO +1.0 V HIGH = +8.7 V NOMINAL.

Figure 9-11. Schematic Diagram
AM Modulator & Diode Switch, A4A5
Dwg No. 4-501445-001 (A)

NOTES: UNLESS OTHERWISE SPECIFIED

1. ALL RESISTORS ARE IN OHMS, ±10%, 1/4 W.
2. ALL CAPACITORS ARE IN μF.
3. PARTIAL REFERENCE DESIGNATIONS ARE SHOWN, FOR COMPLETE DESIGNATION PREFIX WITH ASSY REF DES A4A6. EXAMPLE: R7 IS A4A6R7.
4. * SET OUTPUT LEVEL BY ADJUSTING TAP.
5. VOLTAGES SHOWN WITHOUT TOLERANCES ARE TYPICAL, INPUTS ARE NOMINAL.
6. DC VOLTAGES MEASURED WITH 10 MEGOHM METER, NO INPUT SIGNAL.
7. ALL WAVEFORMS ARE SINUSOIDAL.

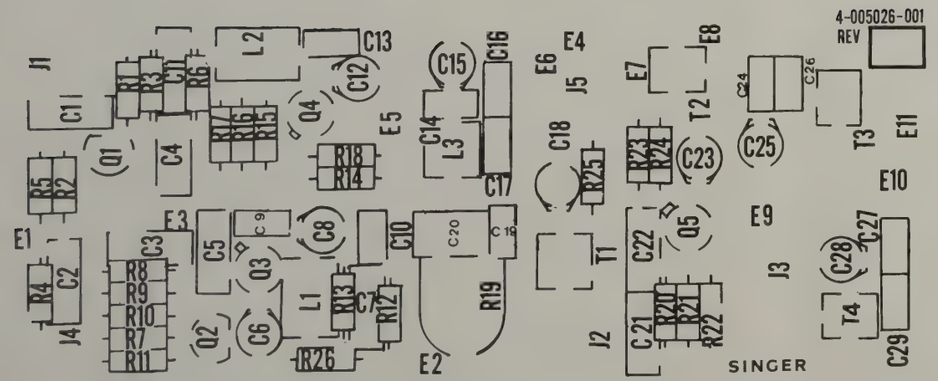

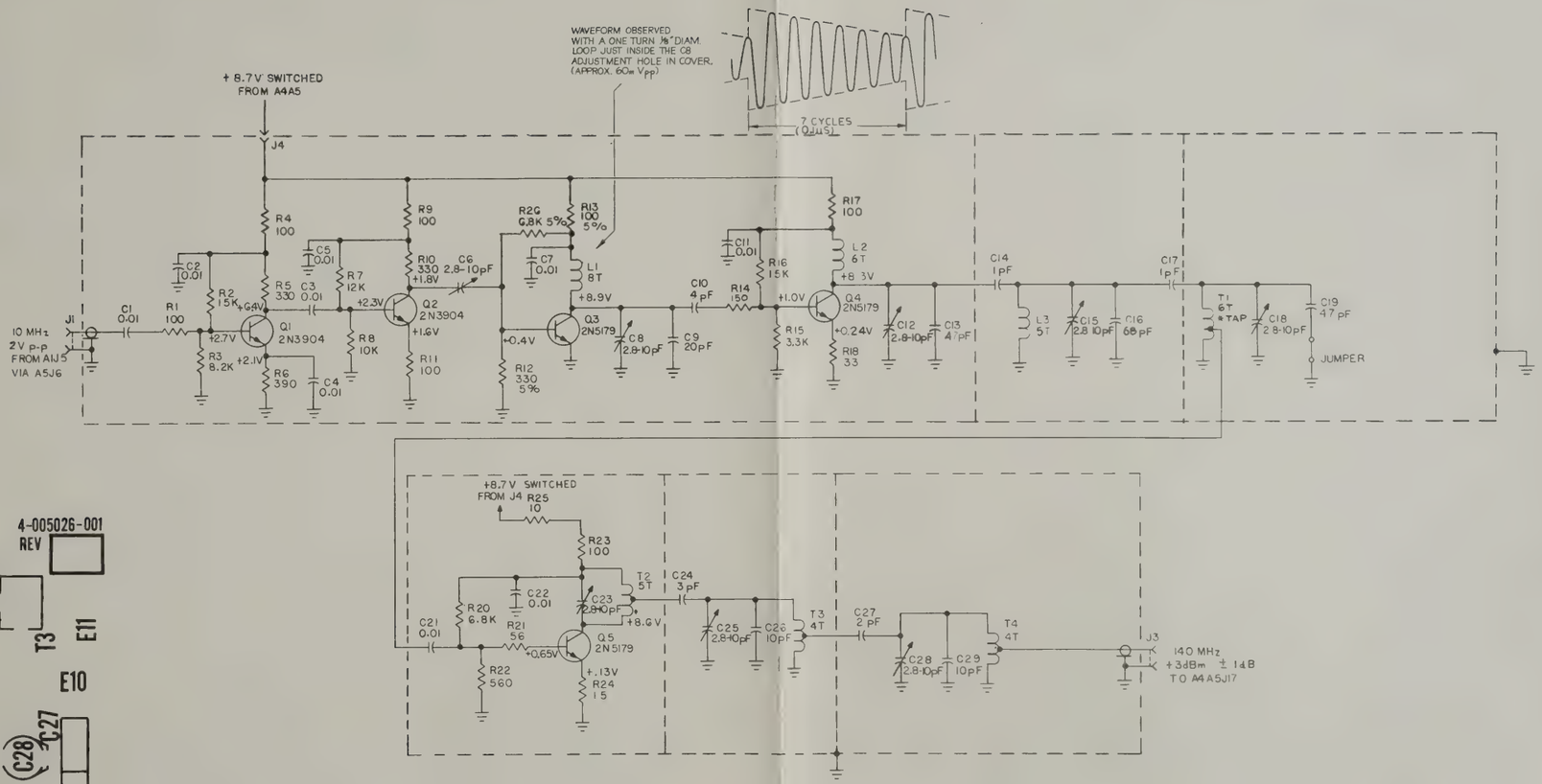

Figure 9-12. Schematic Diagram
Multiplier X7X2 (140 MHz), A4A6
Dwg No. 4-501491-001 (A)

NOTES: UNLESS OTHERWISE SPECIFIED

1. ALL RESISTORS ARE OHMS, ±10%, 1/4 W.
2. ALL CAPACITORS ARE IN μF.
3. PARTIAL REFERENCE DESIGNATIONS ARE SHOWN FOR COMPLETE DESIGNATION PREFIX WITH ASSY REF DES A4A7, EXAMPLE: R7 IS A4A7R7.
4. * SET OUTPUT LEVEL BY ADJUSTING TAP.
5. VOLTAGES SHOWN WITHOUT TOLERANCES ARE TYPICAL, INPUTS ARE NOMINAL.
6. DC VOLTAGES MEASURED WITH 10 MEGOHM METER, NO INPUT SIGNAL.
7. ALL WAVEFORMS ARE SINUSOIDAL.

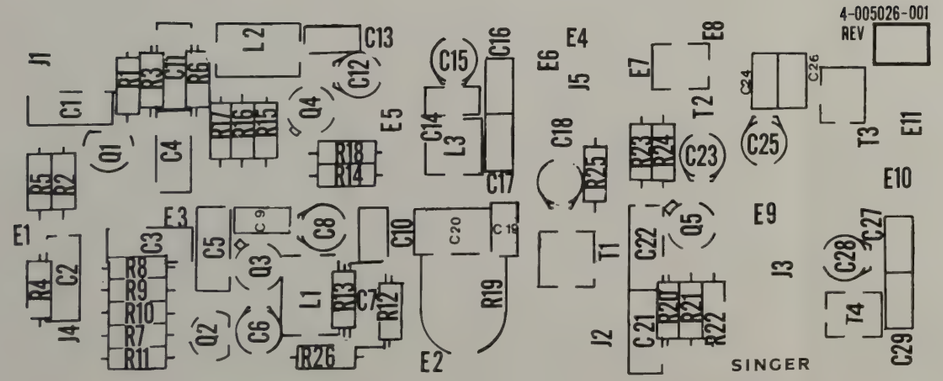

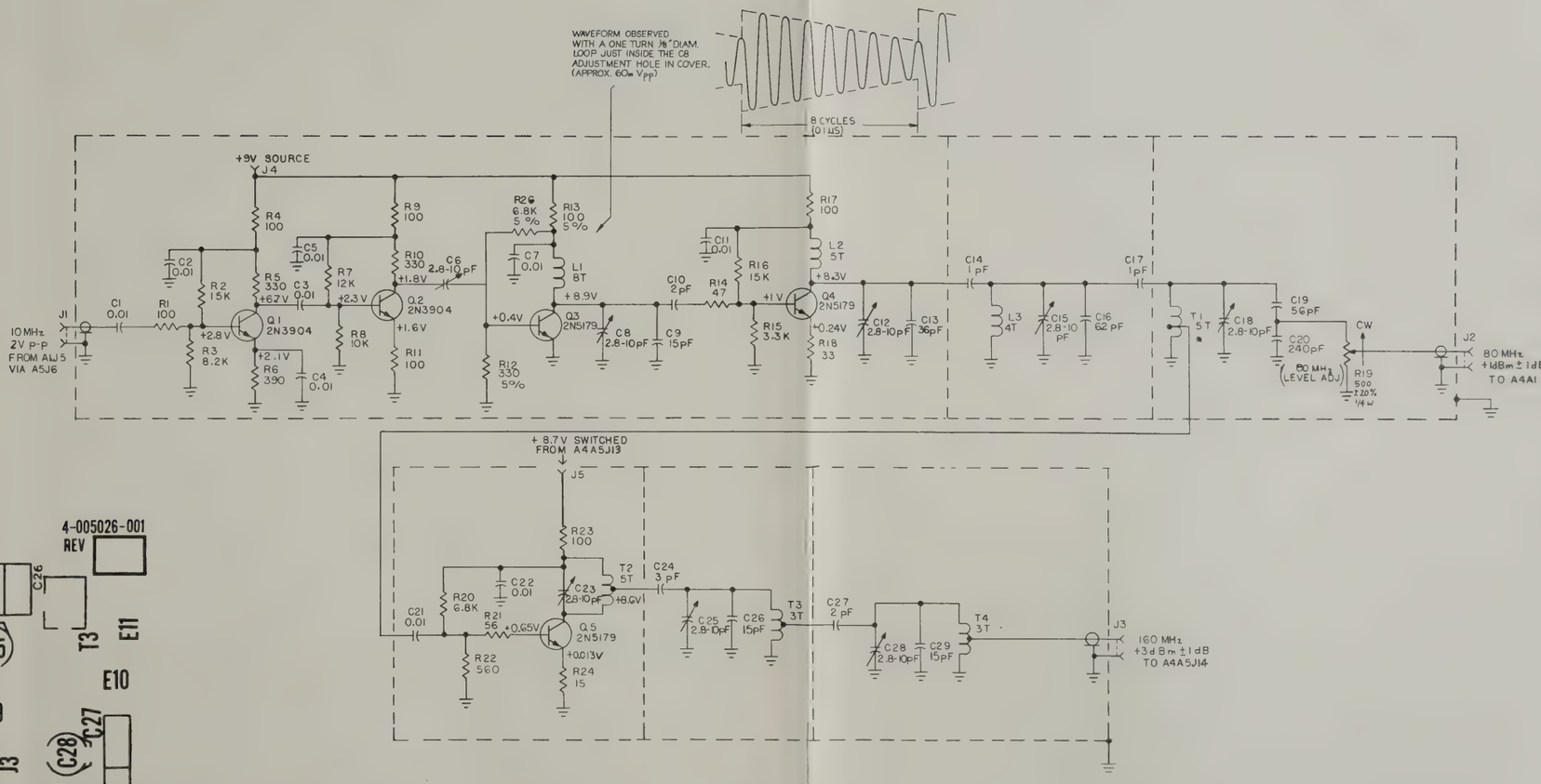

Figure 9-13. Schematic Diagram
Multiplier X8X2 (80 MHz & 160 MHz), A4A7
Dwg No. 4-501493-001 (B)

NOTES: UNLESS OTHERWISE SPECIFIED

1. ALL RESISTORS ARE IN OHMS, ±10%, 1/4 W.
2. ALL CAPACITORS ARE IN μF.
3. PARTIAL REFERENCE DESIGNATIONS ARE SHOWN FOR COMPLETE DESIGNATION PREFIX WITH ASSY REF DES A4A8. EXAMPLE: R7 IS A4A8R7.
4. VOLTAGES SHOWN WITHOUT TOLERANCES ARE TYPICAL, INPUTS ARE NOMINAL.
5. DC VOLTAGES MEASURED WITH 10 MEGOHM METER, NO INPUT SIGNAL.
6. * SET OUTPUT LEVEL BY ADJUSTING TAP.
7. ALL WAVEFORMS ARE SINUSOIDAL.

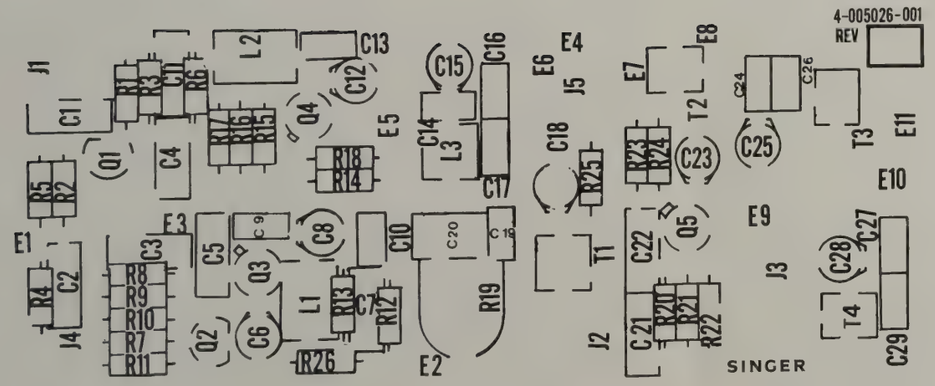

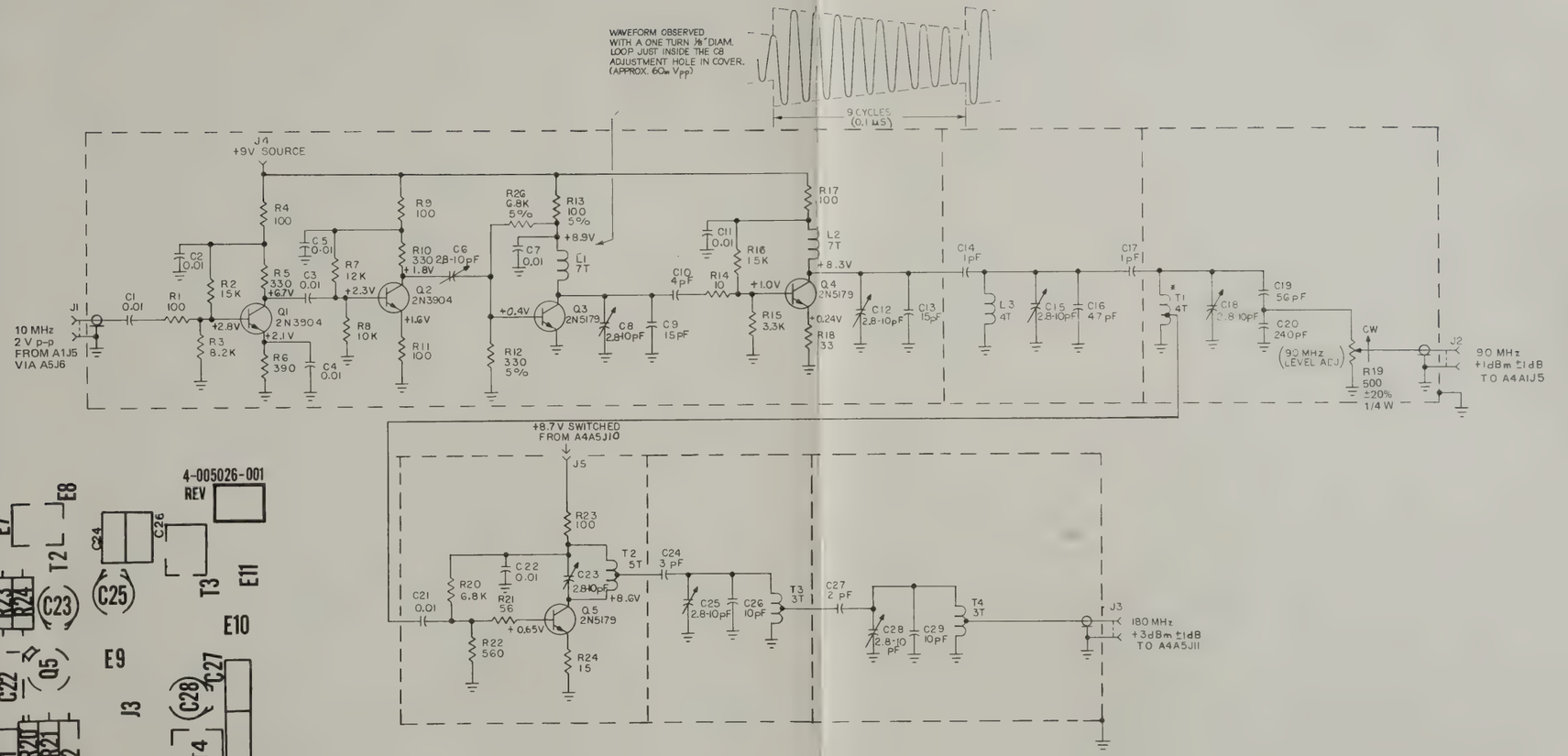
WAVEFORM OBSERVED WITH A ONE TURN 1/8" DIAM. LOOP JUST INSIDE THE C8 ADJUSTMENT HOLE IN COVER. (APPROX. 60m VPP)
9 CYCLES (0.1 μS)
J4 +9V SOURCE
10 MHz 2 V p-p FROM A1J5 VIA A5J6
90 MHz +1dBm ±1dB TO A4AIJ5
+8.7 V SWITCHED FROM A4A5J10
180 MHz +3dBm ±1dB TO A4A5J11

Figure 9-14. Schematic Diagram
Multiplier X9X2 (90 MHz & 180 MHz), A4A8
Dwg No. 4-501463-001 (B)

1. ALL RESISTORS ARE IN OHMS, ±10%, 1/4 W.
2. ALL CAPACITORS ARE IN μF.
3. PARTIAL REFERENCE DESIGNATIONS SHOWN; FOR COMPLETE DESIGNATION PREFIX WITH ASSY REF DES A4A9; EXAMPLE: R7 IS A4A9R7.
4. VOLTAGES SHOWN WITHOUT TOLERANCES ARE TYPICAL. INPUTS ARE NOMINAL.
5. DC VOLTAGES MEASURED WITH 10 MEGOHM METER, NO INPUT SIGNAL.
6. * SET OUTPUT LEVEL BY ADJUSTING TAP.
7. ALL WAVEFORMS ARE SINUSOIDAL.

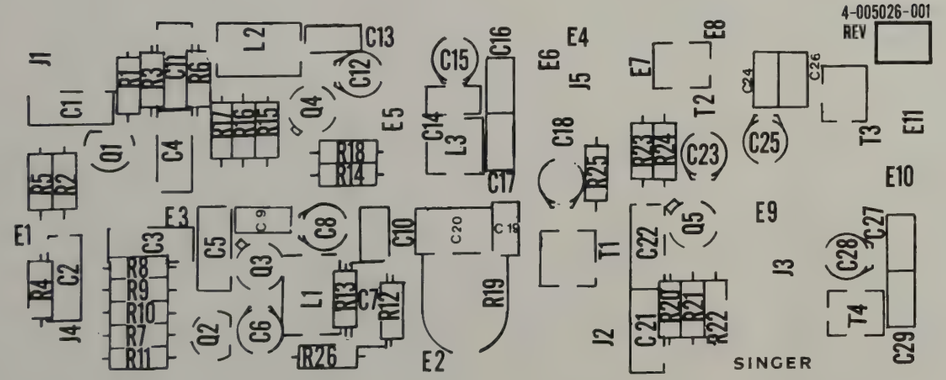

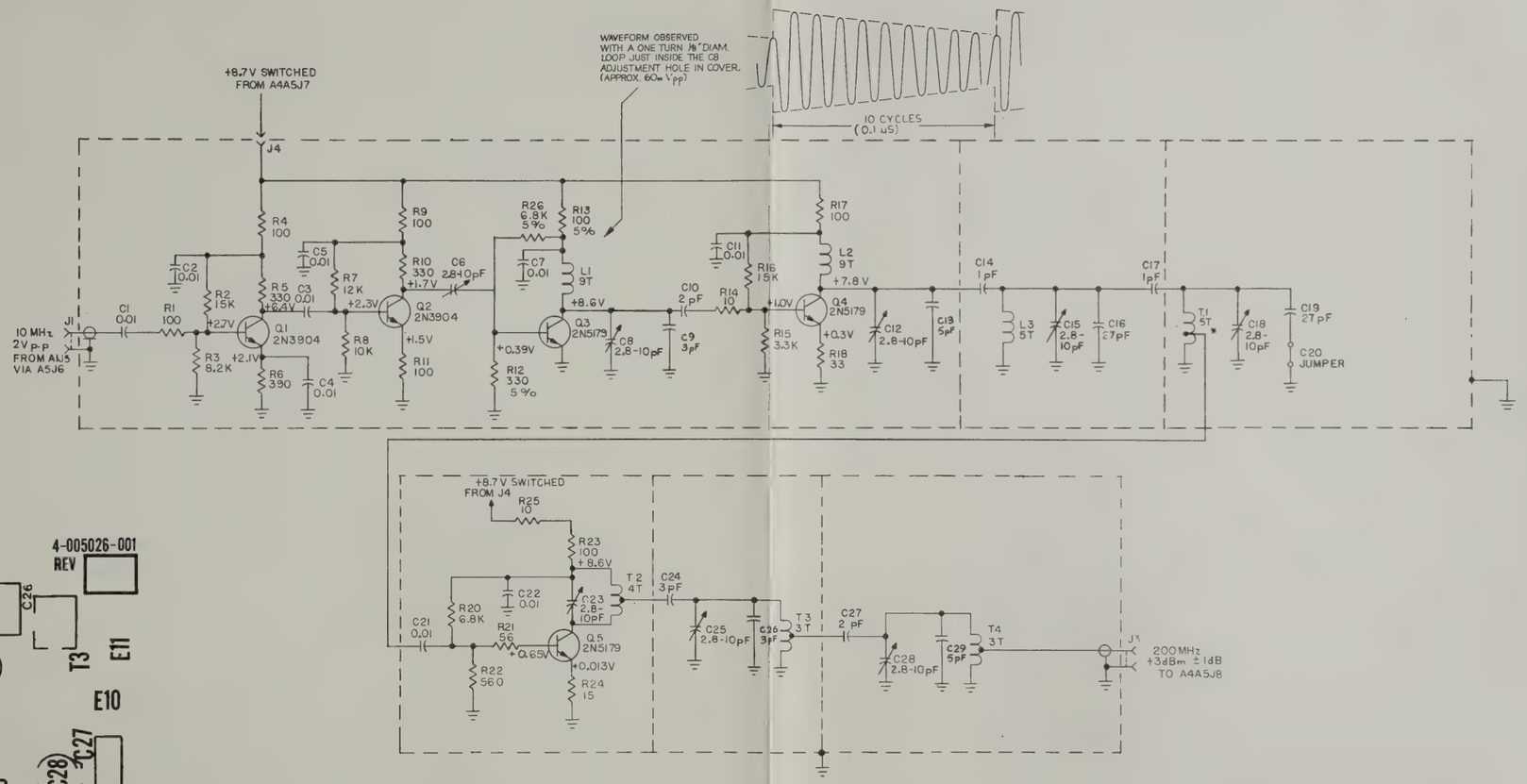
WAVEFORM OBSERVED WITH A ONE TURN 1/8" DIAM. LOOP JUST INSIDE THE C8 ADJUSTMENT HOLE IN COVER. (APPROX. 60m Vpp)
10 CYCLES (0.1 μS)
+8.7V SWITCHED FROM A4A5J7
10 MHz 2V p-p FROM A4J5 VIA A5J6
200MHz +3dBm ±1dB TO A4A5J8

Figure 9-15. Schematic Diagram
Multiplier X10X2 (200 MHz), A4A9
Dwg No. 4-501492-001 (A)

NOTES: UNLESS OTHERWISE SPECIFIED

1. ALL RESISTORS ARE IN OHMS, ±10%, 1/4 W.
2. ALL CAPACITORS ARE IN μF.
3. PARTIAL REFERENCE DESIGNATIONS ARE SHOWN FOR COMPLETE DESIGNATION PREFIX WITH ASSY REF DES A4A10. EXAMPLE: R7 IS A4A10R7.
4. VOLTAGES SHOWN WITHOUT TOLERANCES ARE TYPICAL. INPUTS ARE NOMINAL.
5. DC VOLTAGES MEASURED WITH 10 MEGOHM METER, NO INPUT SIGNAL.
6. *SET OUTPUT LEVEL BY ADJUSTING TAP.
7. ALL WAVEFORMS ARE SINUSOIDAL.

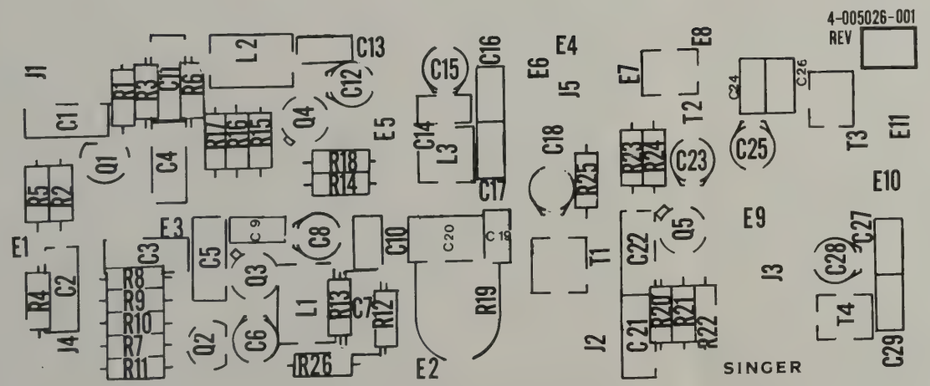

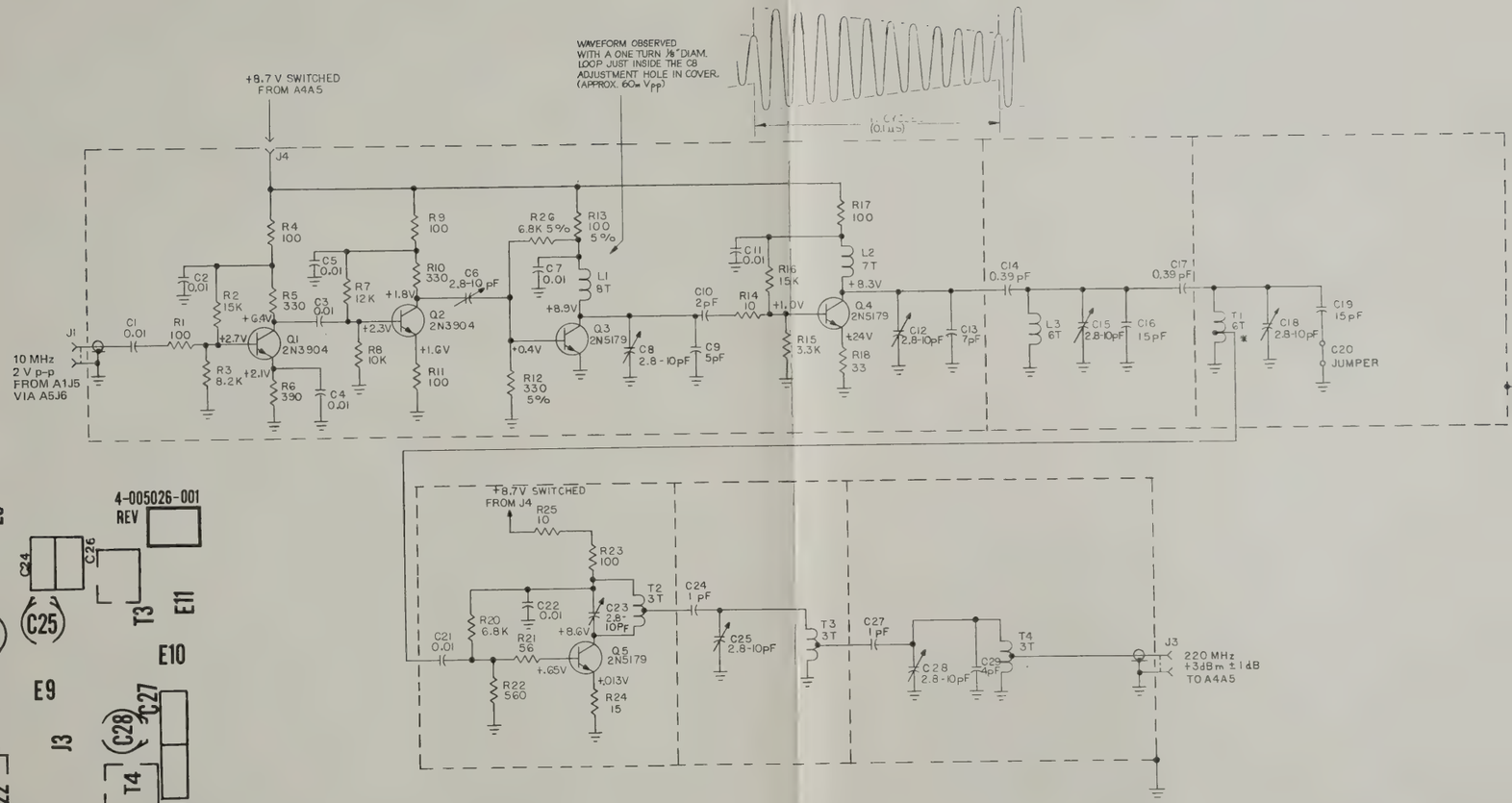
+8.7 V SWITCHED FROM A4A5
WAVEFORM OBSERVED WITH A ONE TURN ⅛" DIAM. LOOP JUST INSIDE THE CB ADJUSTMENT HOLE IN COVER. (APPROX. 60m Vpp)
10 MHz 2 V p-p FROM A1J5 VIA A5J6
+8.7V SWITCHED FROM J4
220 MHz +3dBm ± 1dB TO A4A5

Figure 9-16. Schematic Diagram
Multiplier X11X2 (220 MHz), A4A10
Dwg No. 4-501494-001 (A)

NOTES: UNLESS OTHERWISE SPECIFIED

1. ALL RESISTORS VALUES ARE IN OHMS, ±10%, 1/4 W.
2. ALL TRANSISTORS ARE 2N6304.
3. VOLTAGES SHOWN ARE TYPICAL; WITH J4 GROUNDED, NO SIGNAL AT J1.
4. PARTIAL REFERENCE DESIGNATORS ARE SHOWN; FOR COMPLETE DESIGNATION PREFIX WITH ASSY REF DES A4A11. EXAMPLE: R7 IS A4A11R7.

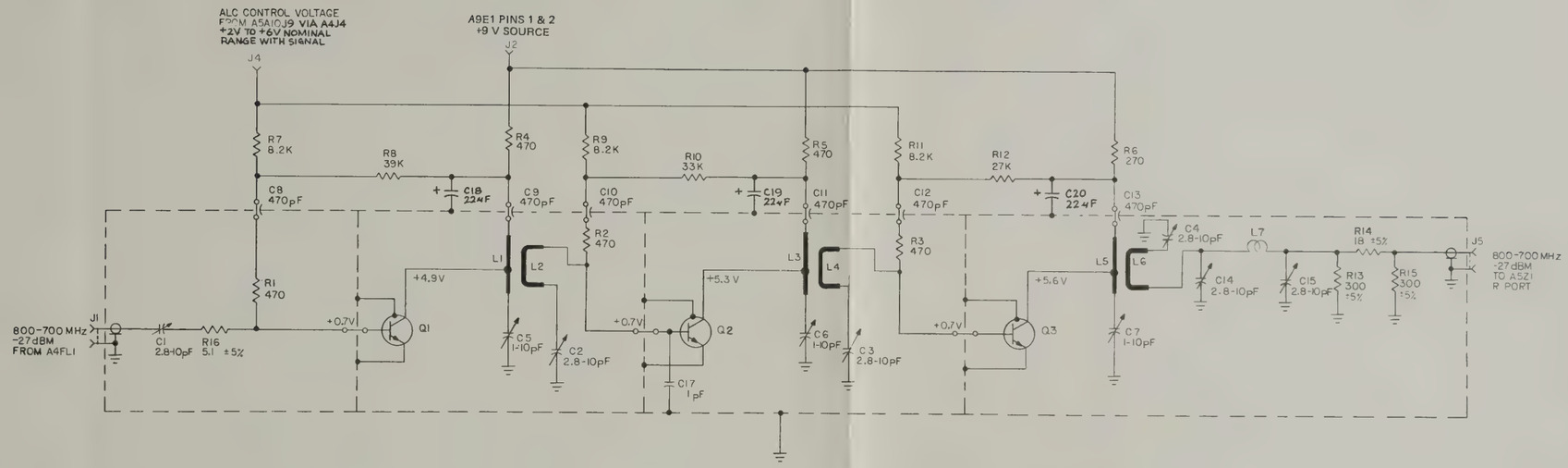

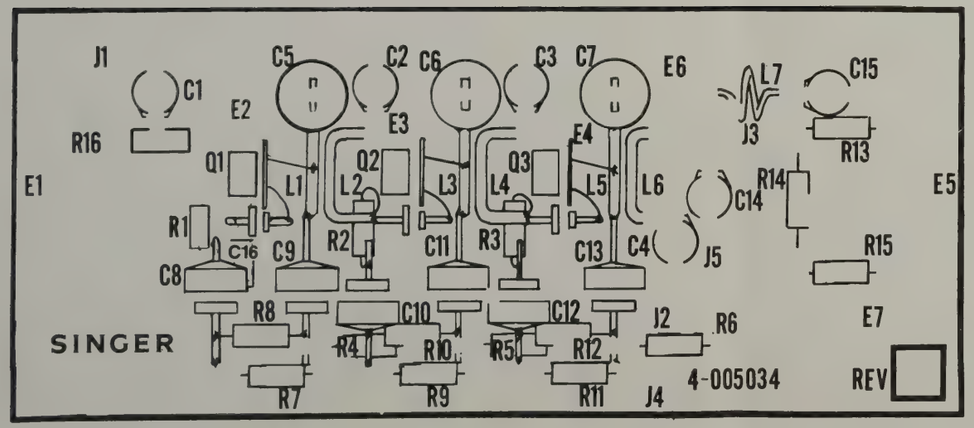

Figure 9-17. Schematic Diagram
Gain Control Amplifier, A4A11
Dwg No. 4-501476-001

NOTES: UNLESS OTHERWISE SPECIFIED

1. ALL RESISTORS ARE IN OHMS, 10%, 1/4 W.
2. ALL CAPACITORS ARE IN μF.
3. REFERENCE DESIGNATIONS ARE ABBREVIATED. FOR COMPLETE DESIGNATION, PREFIX DESIGNATIONS WITH A4A9.
4. VOLTAGES SHOWN WITHOUT TOLERANCES ARE TYPICAL. INPUTS ARE NOMINAL.
5. DC VOLTAGES MEASURED WITH 10 MEGOHM METER, NO INPUT SIGNAL.
6. ALL WAVEFORMS ARE SINUSOIDAL.

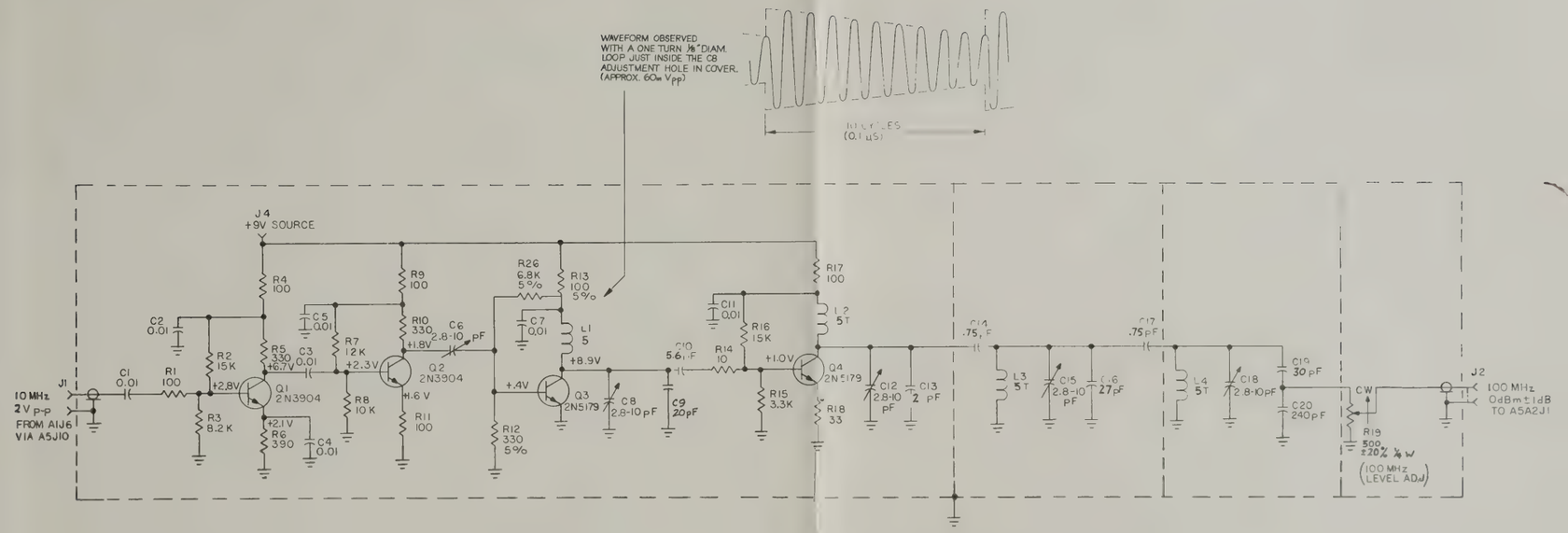
WAVEFORM OBSERVED WITH A ONE TURN ⅛" DIAM. LOOP JUST INSIDE THE CB ADJUSTMENT HOLE IN COVER. (APPROX. 60m Vpp)
J4 +9V SOURCE
J1 10 MHz 2 V p-p FROM A1J6 VIA A5J10
Q1 2N3904
Q2 2N3904
Q3 2N5179
Q4 2N5179
J2 100 MHz 0dBm±1dB TO A5A2J1
R19 500 ±20% ¼ W (100 MHz LEVEL ADJ)

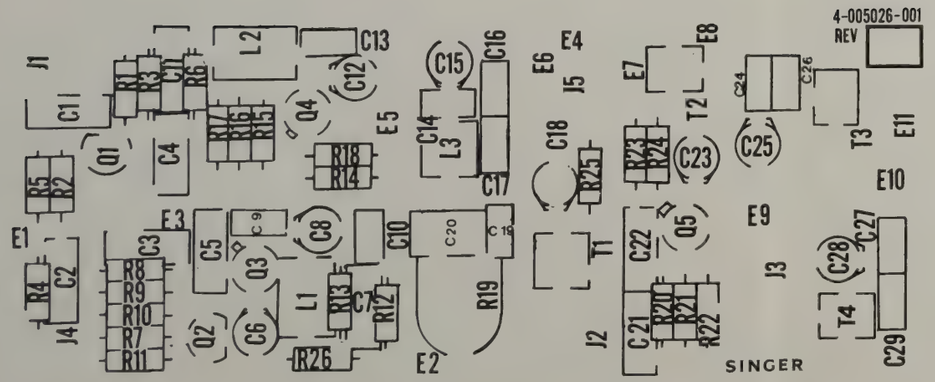

Figure 9-18. Schematic Diagram
Multiplier X10 (100 MHz), A5A1
Dwg No. 4-501505-001 (B)

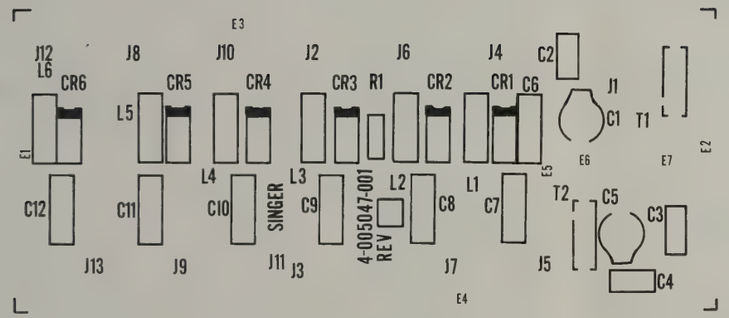

NOTES: UNLESS OTHERWISE SPECIFIED

1. ALL CAPACITORS ARE IN MICROFARADS.
2. ALL RESISTORS ARE 1/4 W, ±10%.
3. PARTIAL REFERENCE DESIGNATORS ARE SHOWN; FOR COMPLETE DESIGNATION PREFIX WITH ASSY REF DES A5A2. EXAMPLE C7 IS A5A2C7.
4. ALL DIODES ARE IN273.

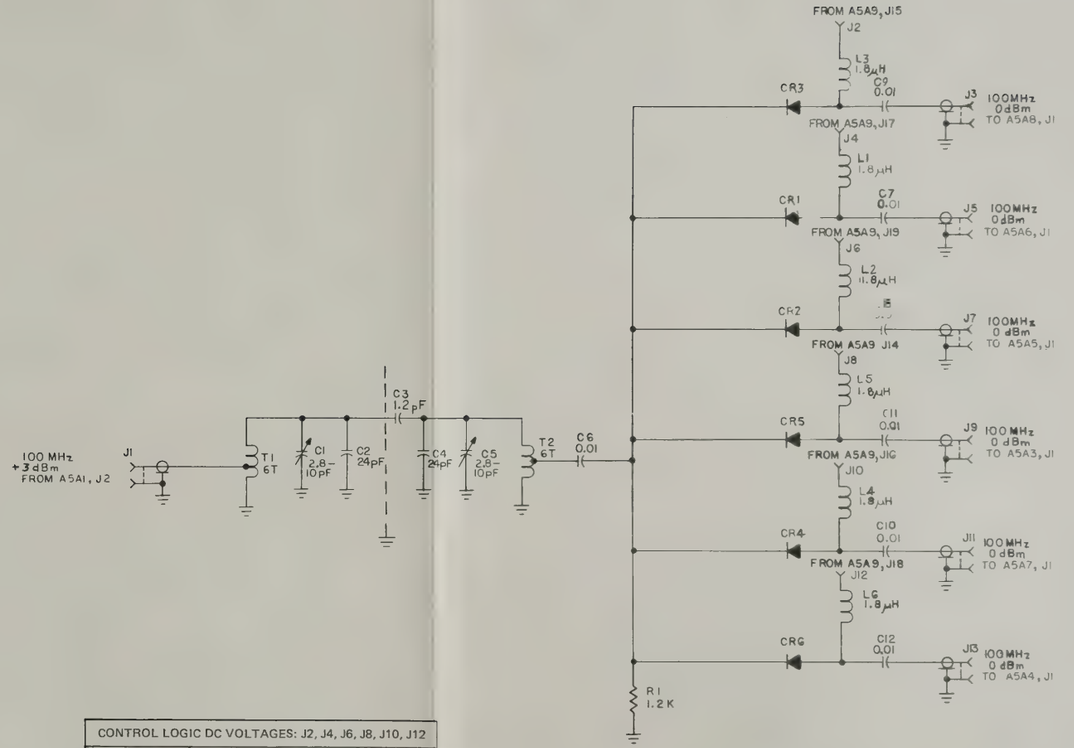

CONTROL LOGIC DC VOLTAGES: J2, J4, J6, J8, J10, J12		
ON STATE	ONE OF SIX	+8.7 V
OFF STATE	ALL FIVE OTHERS	0 V

Figure 9-19. Schematic Diagram
Input Diode Switch, A5A2
Dwg No. 4-501489-001 (A)

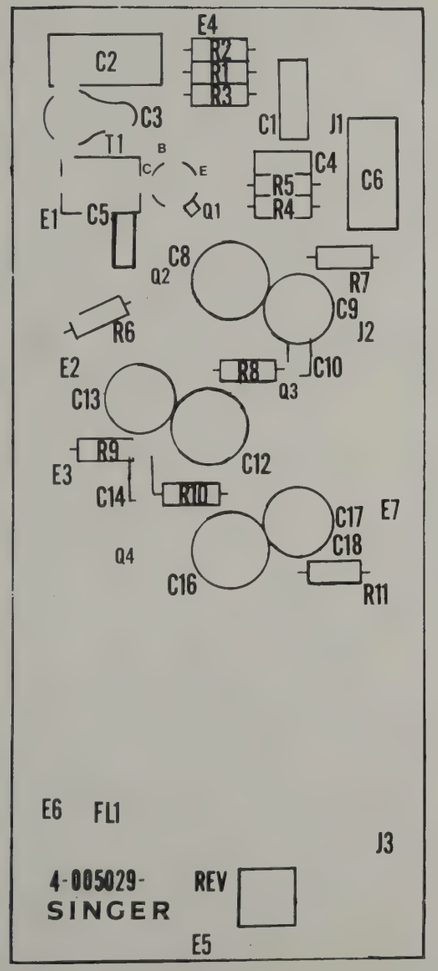

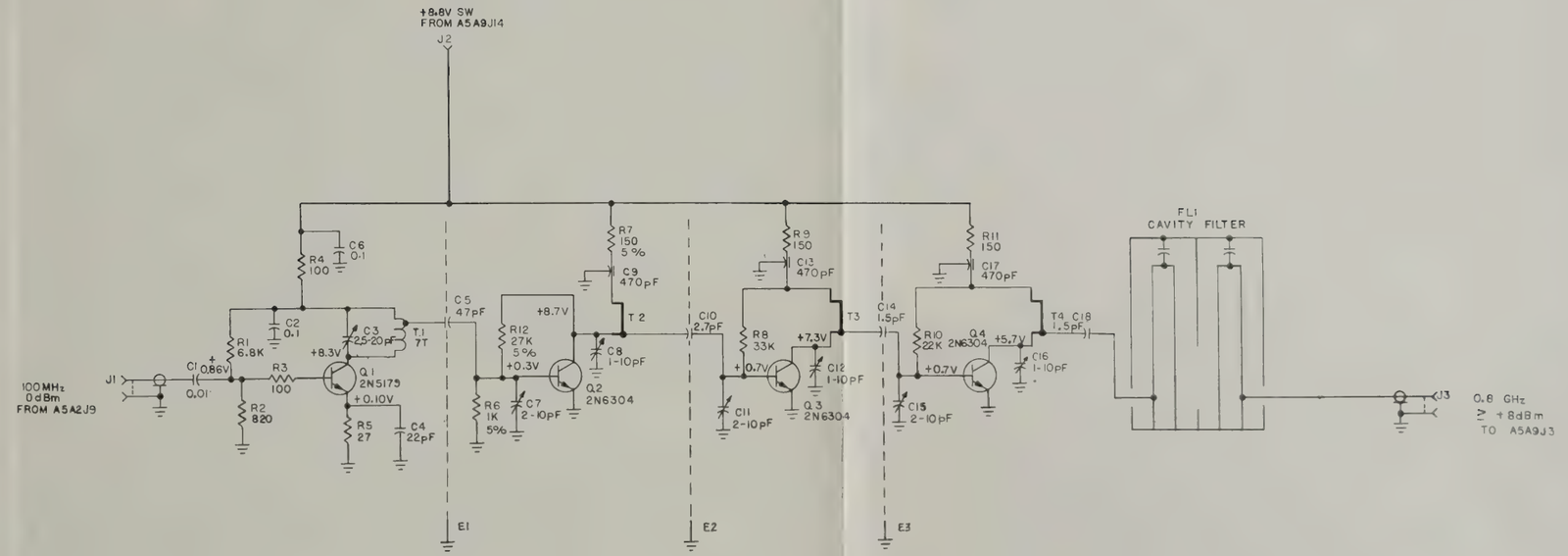

NOTES: UNLESS OTHERWISE SPECIFIED

1. ALL CAPACITORS ARE IN MICROFARADS.
2. ALL RESISTORS ARE IN OHMS, 1/4 W, 10%.
3. PARTIAL REF DESIGNATORS ARE SHOWN, FOR COMPLETE DESIGNATION PREFIX WITH ASSY REF DES A5A3. EXAMPLE: R1 IS A5A3R1.

Figure 9-20. Schematic Diagram
Multiplier X8 (0.8 GHz), A5A3
Dwg No. 4-501513-001 (A)

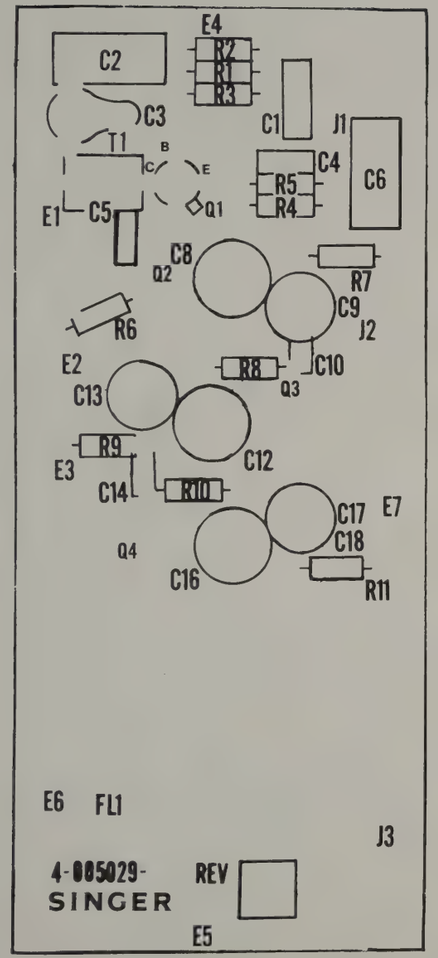

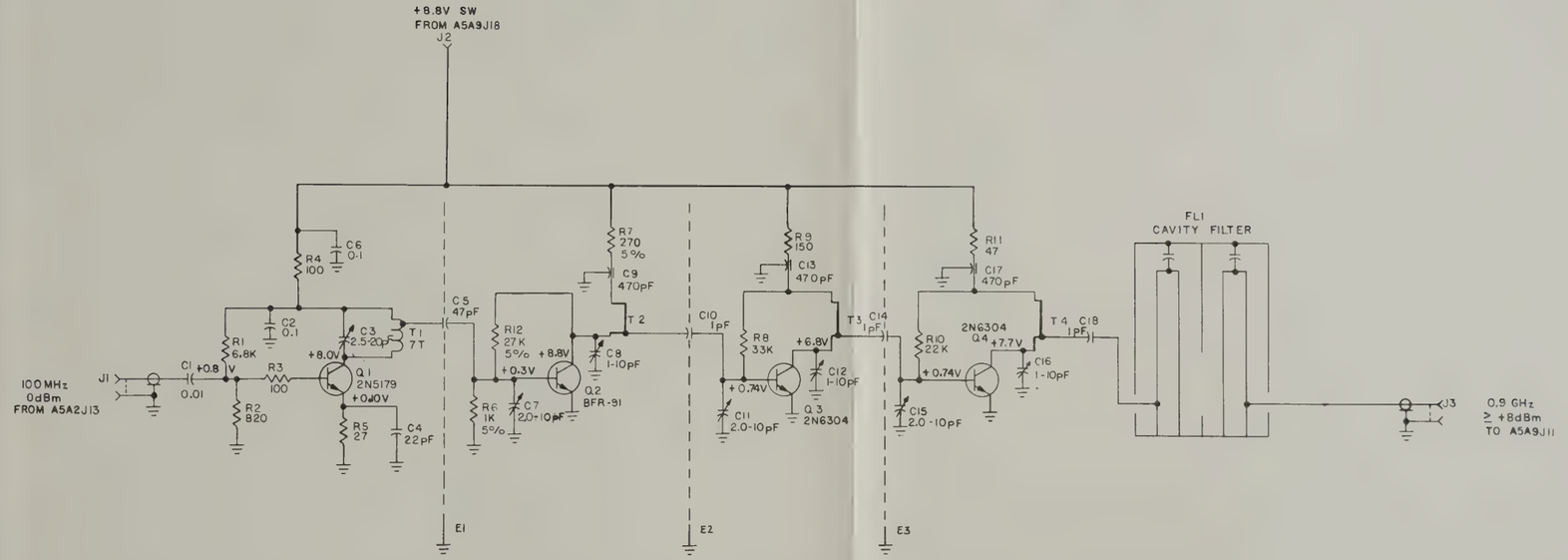

NOTES: UNLESS OTHERWISE SPECIFIED

1. ALL CAPACITORS ARE IN MICROFARADS.
2. ALL RESISTORS ARE IN OHMS, 1/4 W, 10%.
3. PARTIAL REF DESIGNATORS ARE SHOWN. FOR COMPLETE DESIGNATION PREFIX WITH ASSY NO. A5A4. EXAMPLE: R7 IS A5A4R7.

Figure 9-21. Schematic Diagram
Multiplier X9 (0.9 GHz), A5A4
Dwg No. 4-501514-001 (A)

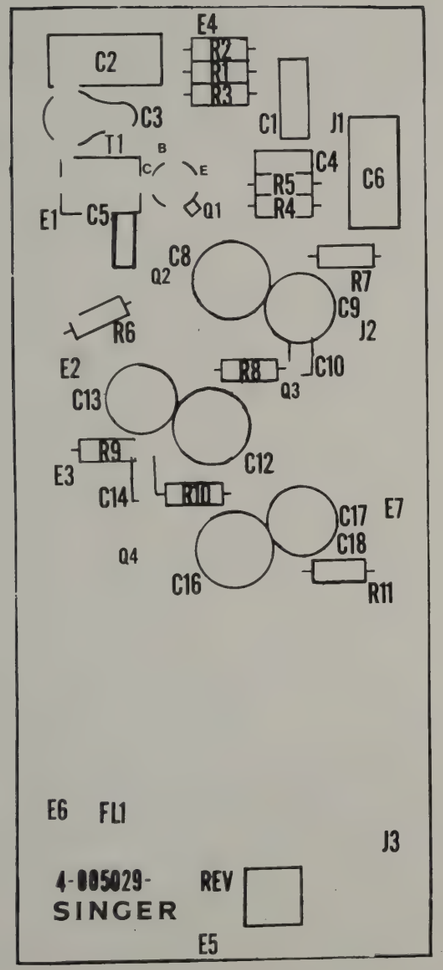

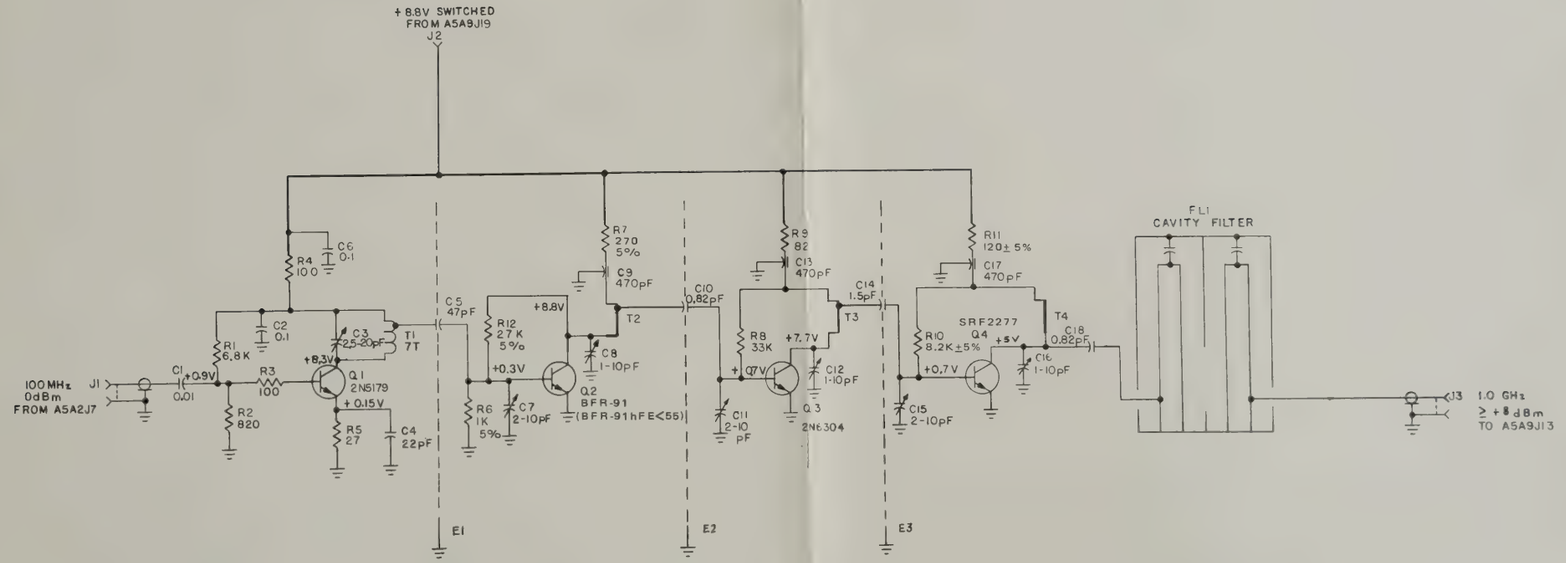

NOTES: UNLESS OTHERWISE SPECIFIED

1. ALL CAPACITORS ARE IN MICROFARADS.
2. ALL RESISTORS ARE IN OHMS, 1/4 W, 10%.
3. PARTIAL REF DESIGNATORS ARE SHOWN. FOR COMPLETE DESIGNATION PREFIX WITH ASSY REF DES A5A5. EXAMPLE: R1 IS A5A5R1.

Figure 9-22. Schematic Diagram
Multiplier X10 (1.0 GHz), A5A5
Dwg No. 4-501515-001 (D)

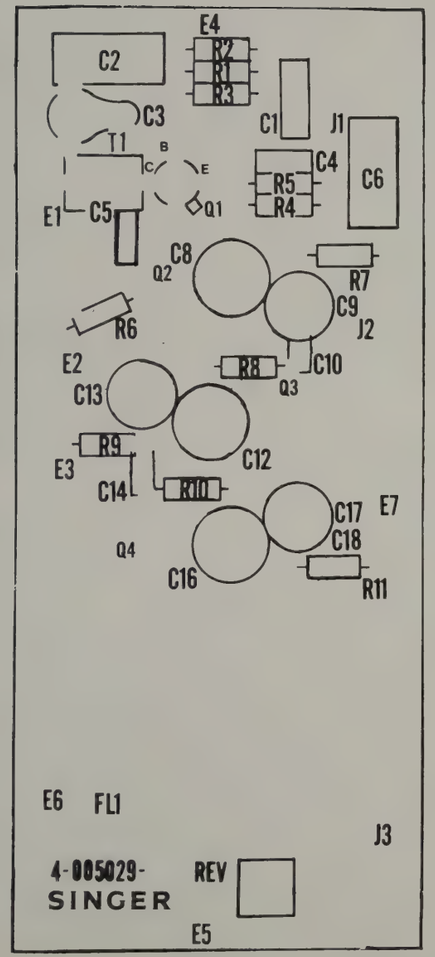

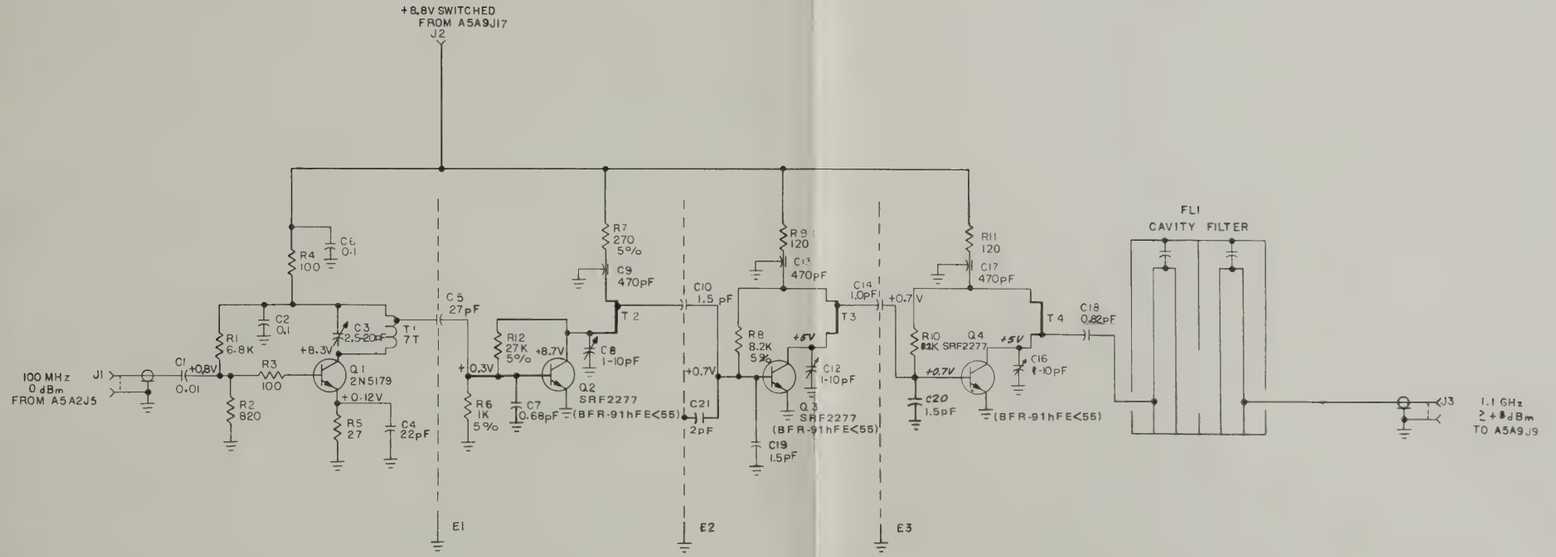

NOTES: UNLESS OTHERWISE SPECIFIED

1. ALL CAPACITORS ARE IN MICROFARADS.
2. ALL RESISTORS ARE IN OHMS, 1/4 W, 10%.
3. PARTIAL REF DESIGNATORS ARE SHOWN. FOR COMPLETE DESIGNATION PREFIX WITH ASSY REF DES A5A6. EXAMPLE: R1 IS A5A6R1.

Figure 9-23. Schematic Diagram
Multiplier X11 (1.1 GHz), A5A6
Dwg No. 4-501516-001 (C)

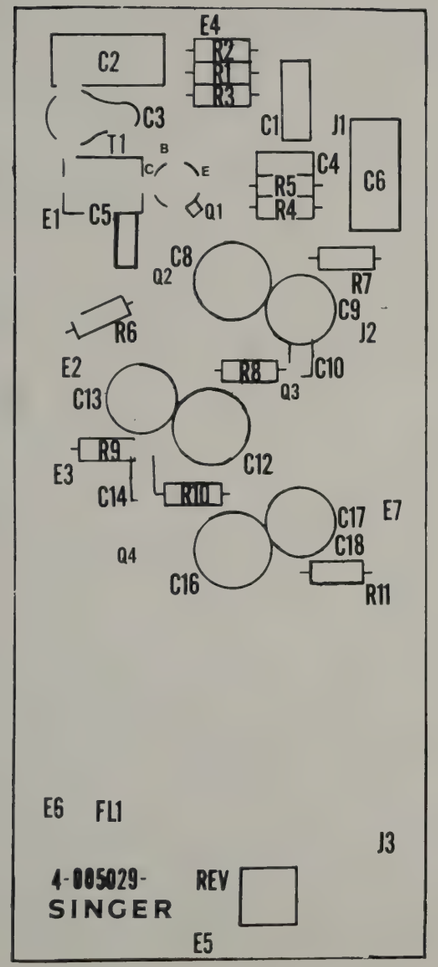

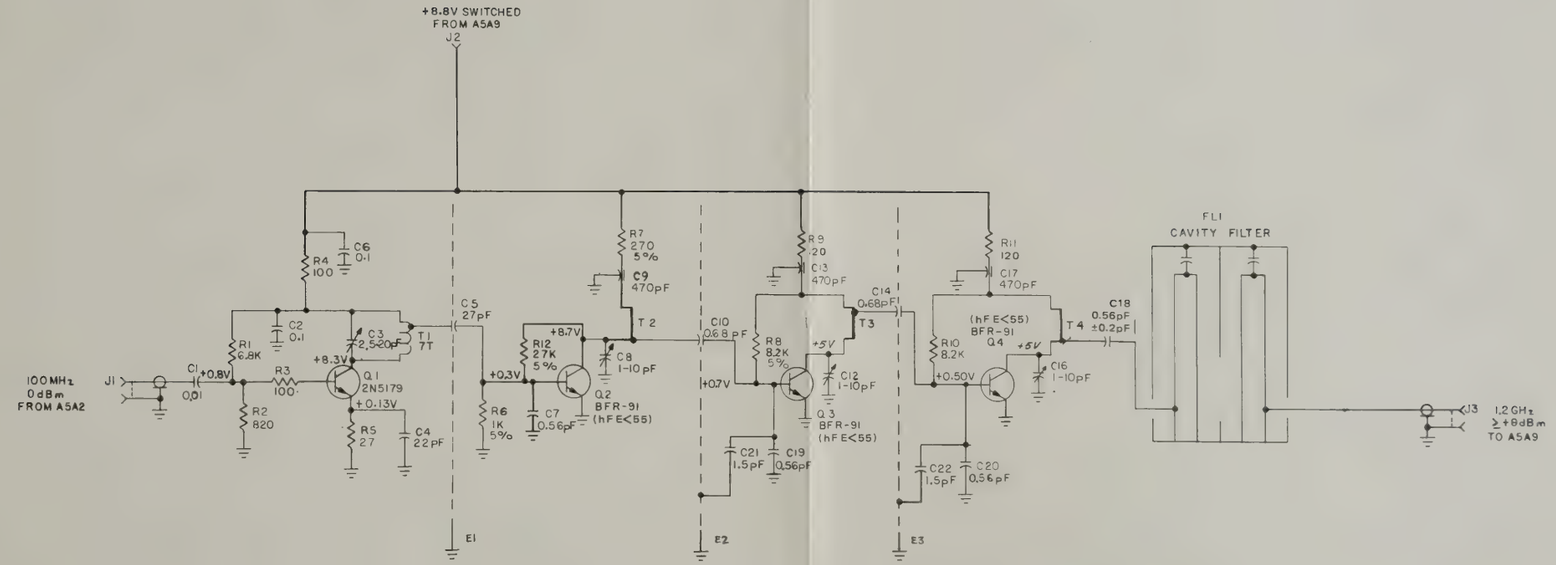

NOTES: UNLESS OTHERWISE SPECIFIED

1. ALL CAPACITORS ARE IN MICROFARADS.
2. ALL RESISTORS ARE IN OHMS, 1/4 W, 10%
3. PARTIAL REFERENCE DESIGNATORS ARE SHOWN. FOR COMPLETE DESIGNATION PREFIX WITH ASSY REF DES A5A7. EXAMPLE: R1 IS A5A7R1

Figure 9-24. Schematic Diagram
Multiplier X12 (1.2 GHz), A5A7
Dwg No. 4-501517-001 (C)

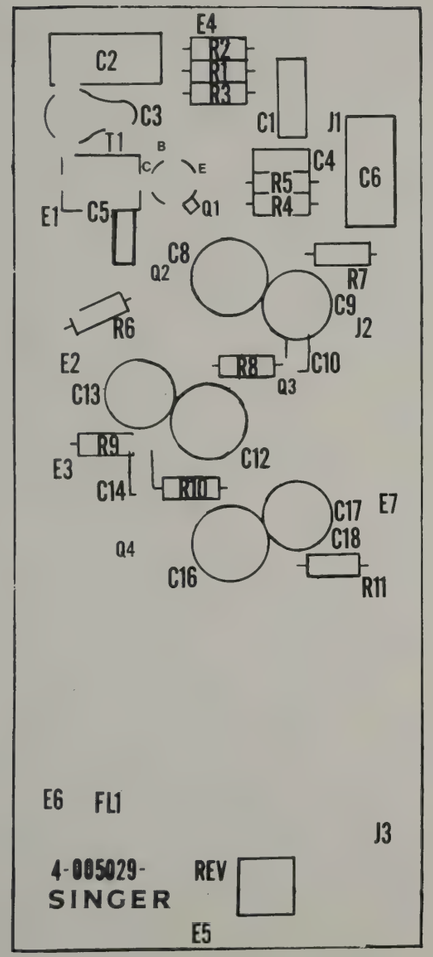

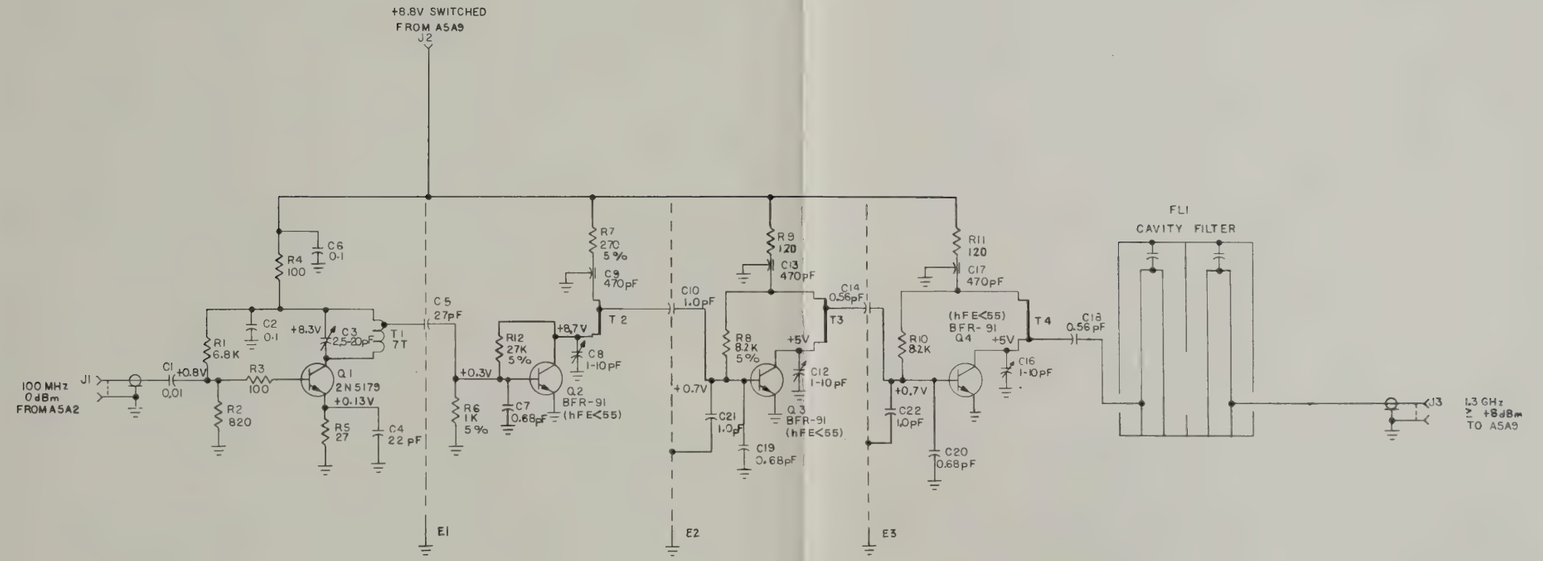

NOTES: UNLESS OTHERWISE SPECIFIED

1. ALL CAPACITORS ARE IN MICROFARADS.
2. ALL RESISTORS ARE IN OHMS, 1/4 W, 10%.
3. PARTIAL REF DESIGNATORS ARE SHOWN, FOR COMPLETE DESIGNATION PREFIX WITH ASSY REF DES A5A8. EXAMPLE: R1 IS A5A8R1.

Figure 9-25. Schematic Diagram
Multiplier X13 (1.3 GHz), A5A8
Dwg No. 4-501518-001 (C)

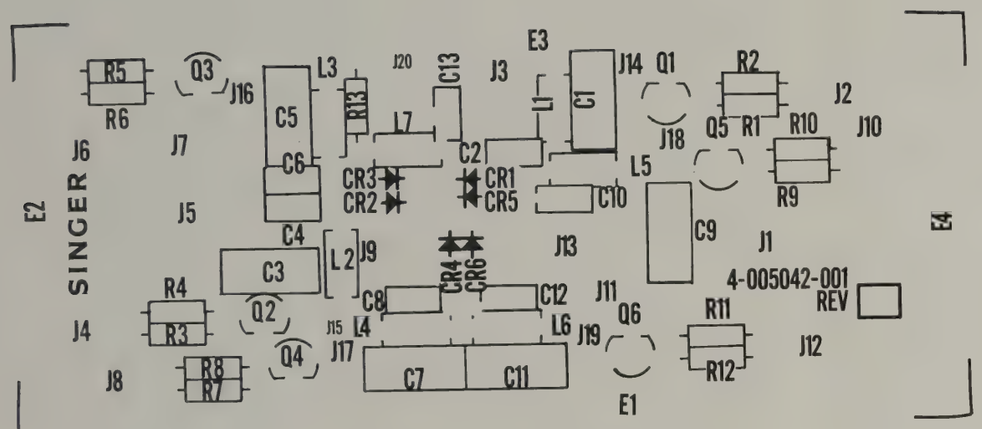

NOTES: UNLESS OTHERWISE SPECIFIED

1. ALL DIODES ARE IN273.
2. ALL RESISTORS VALUES ARE IN OHMS, 1/4 W, ±10%.
3. ALL TRANSISTORS ARE 2N3906.
4. PARTIAL REFERENCE DESIGNATORS ARE SHOWN; FOR COMPLETE DESIGNATION PREFIX WITH ASSY REF DES A5A9: EXAMPLE, R7 IS A5A9R7.
5. VOLTAGES SHOWN WITHOUT TOLERANCES ARE TYPICAL.
6. ALL WAVEFORMS SINUSOIDAL.

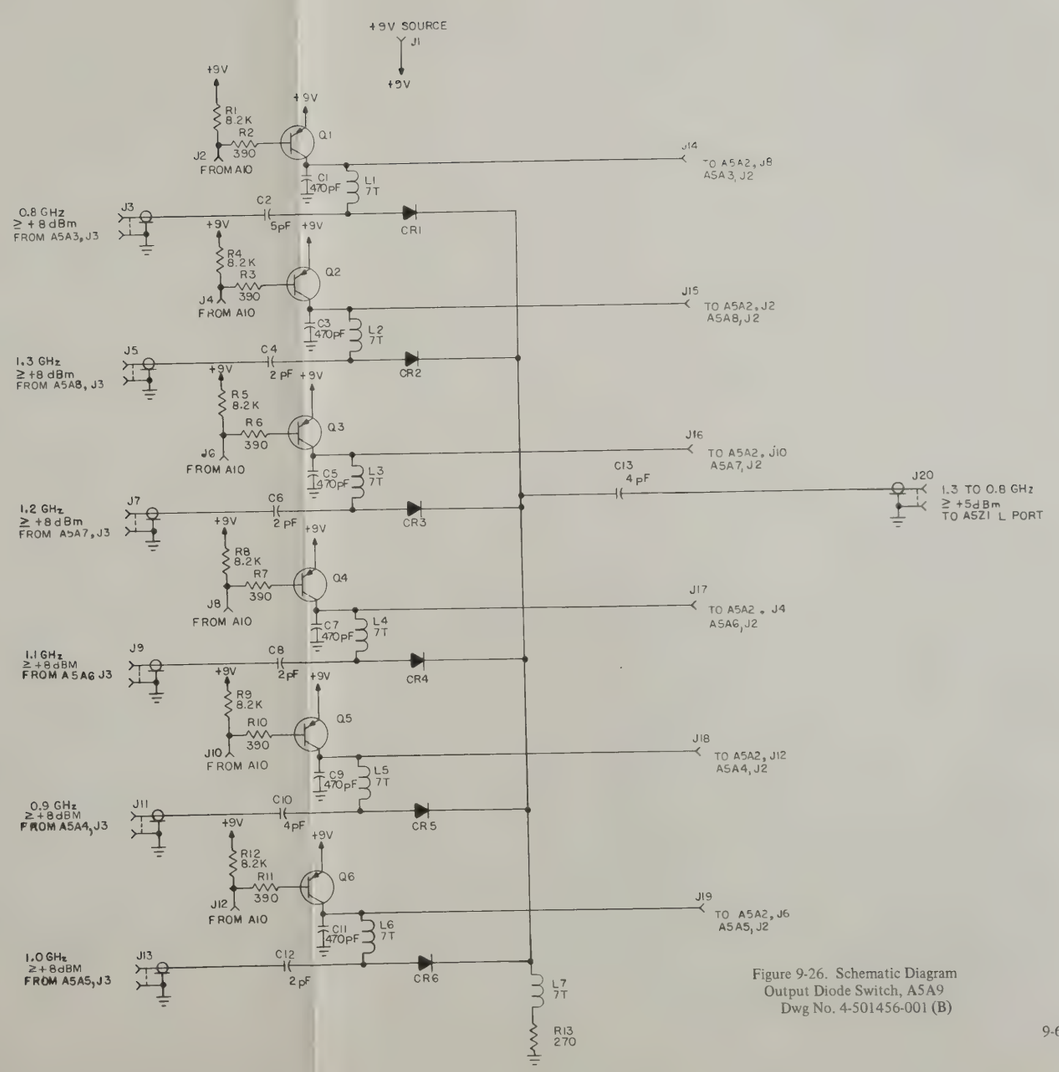

Figure 9-26. Schematic Diagram
Output Diode Switch, A5A9
Dwg No. 4-501456-001 (B)

NOTES: UNLESS OTHERWISE SPECIFIED

1. PARTIAL REFERENCE DESIGNATORS ARE SHOWN. FOR COMPLETE DESIGNATION PREFIX WITH ASSY REF DES. EXAMPLE: C1 IS A5A10C1
2. ALL CAPACITORS VALUES ARE MICROFARADS.
3. ALL RESISTORS VALUES ARE IN OHMS, ±5%, 1/4 W.

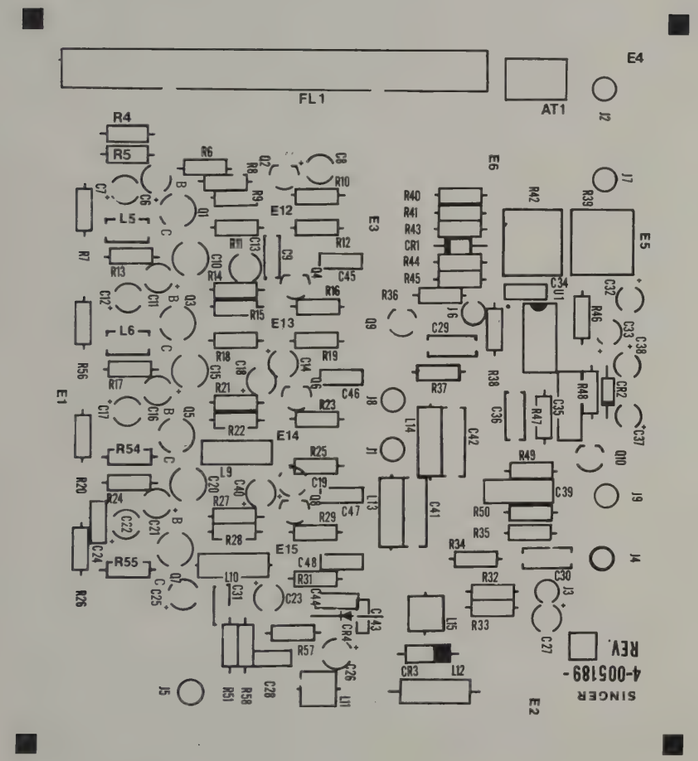

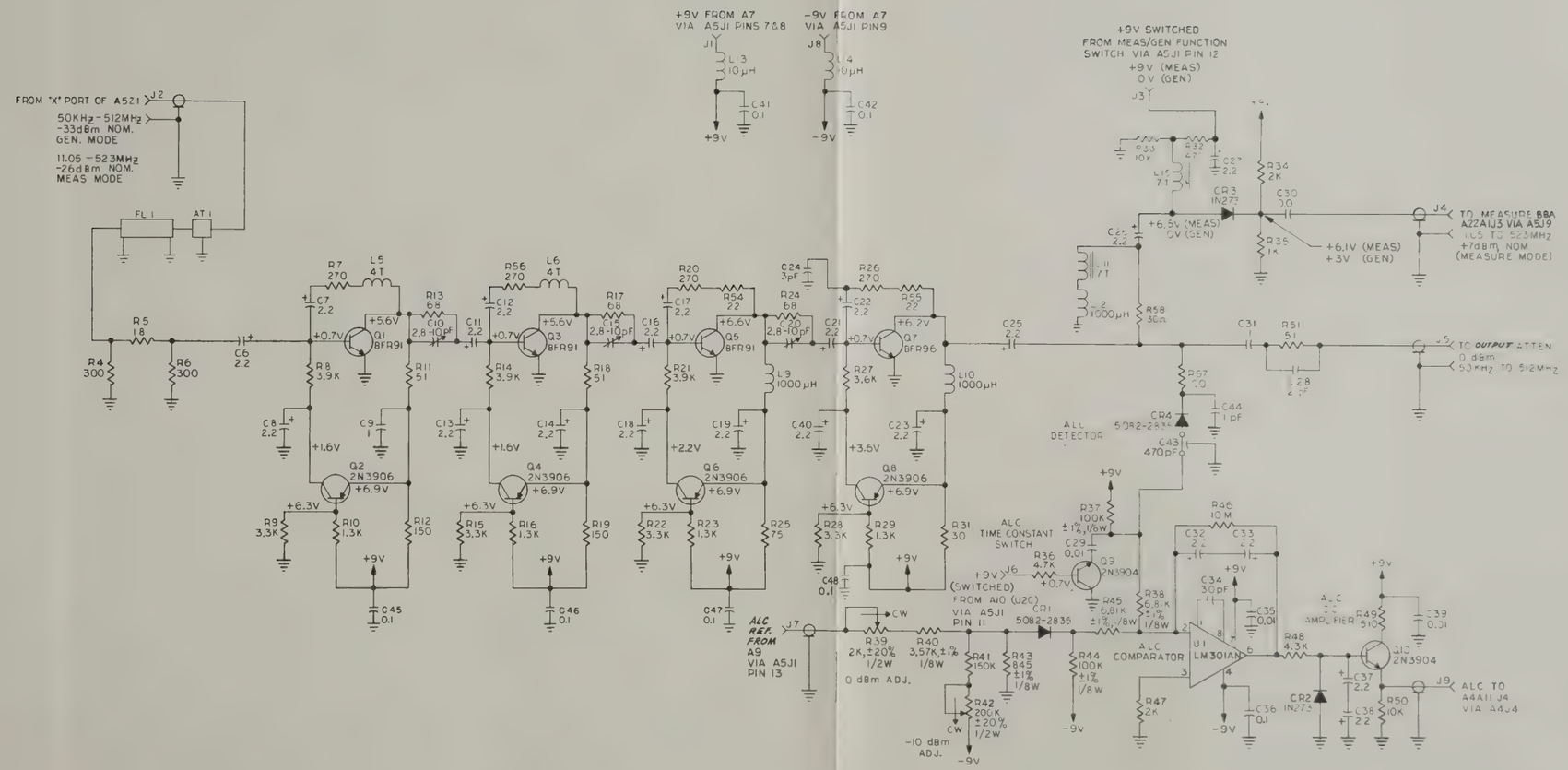
+9V FROM A7 VIA A5J1 PINS 7&8
-9V FROM A7 VIA A5J1 PIN 9
+9V SWITCHED FROM MEAS/GEN FUNCTION SWITCH VIA A5J1 PIN 12
+9V (MEAS)
0V (GEN)
FROM "X" PORT OF A5Z1
50KHz - 512MHz -33dBm NOM. GEN. MODE
11.05 - 523MHz -26dBm NOM. MEAS MODE
+6.5V (MEAS) 0V (GEN)
+6.1V (MEAS) +3V (GEN)
TO MEASURE B&A A22A1J3 VIA A5J9
TO OUTPUT ATTEN
ALC DETECTOR
ALC TIME CONSTANT SWITCH
ALC REF. FROM A9 VIA A5J1 PIN 13
0 dBm ADJ.
-10 dBm ADJ.
ALC AMPLIFIER
ALC COMPARATOR
ALC TO A4A1J4 VIA A4J4

Figure 9-27. Schematic Diagram
Final B.B.A., A5A10
Dwg No. 4-501519-001(B)

NOTES: UNLESS OTHERWISE SPECIFIED

1. PARTIAL REFERENCE DESIGNATORS ARE SHOWN: FOR COMPLETE DESIGNATION, PREFIX WITH ASSY REF DES (A6A1) EXAMPLE: A6A1C2.
2. ALL RESISTOR VALUES ARE IN OHMS, ±10%, 1/4 WATT.
3. ALL CAPACITOR VALUES ARE IN MICROFARADS.
4. ALL DIODES ARE IN3062.
5. DC VOLTAGES MEASURED WITH J2 OPEN AND CARRIER LEVEL CONTROL (A19R2B) TO MAX CW POSITION, AGC/MAN SW IN AGC POS, MEAS/GEN SW IN MEAS, 0.06 TO 2 MV POSITION. VOLTAGES MARKED (*) WILL VARY WITH SIGNAL LEVEL AT J2.
6. FERRITE BEAD (FL2), ON EMITTER LEAD OF Q13, IS INSTALLED AT TEST TIME AS REQUIRED.

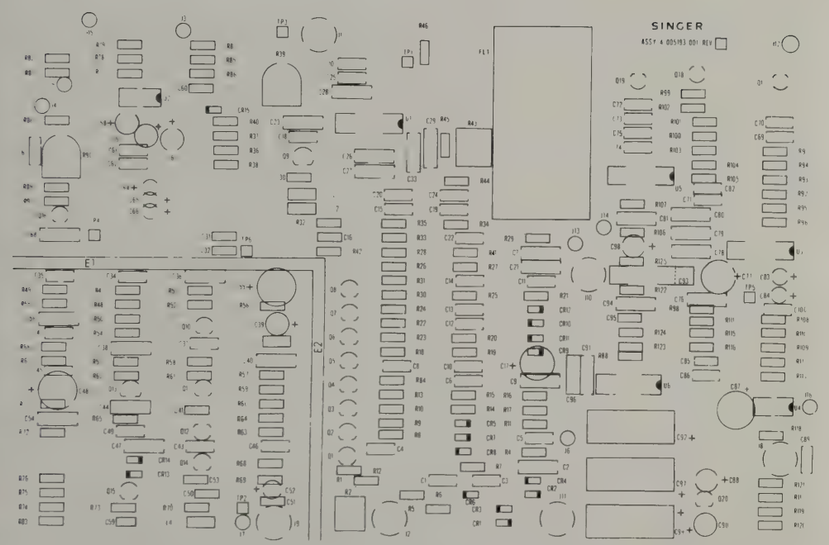

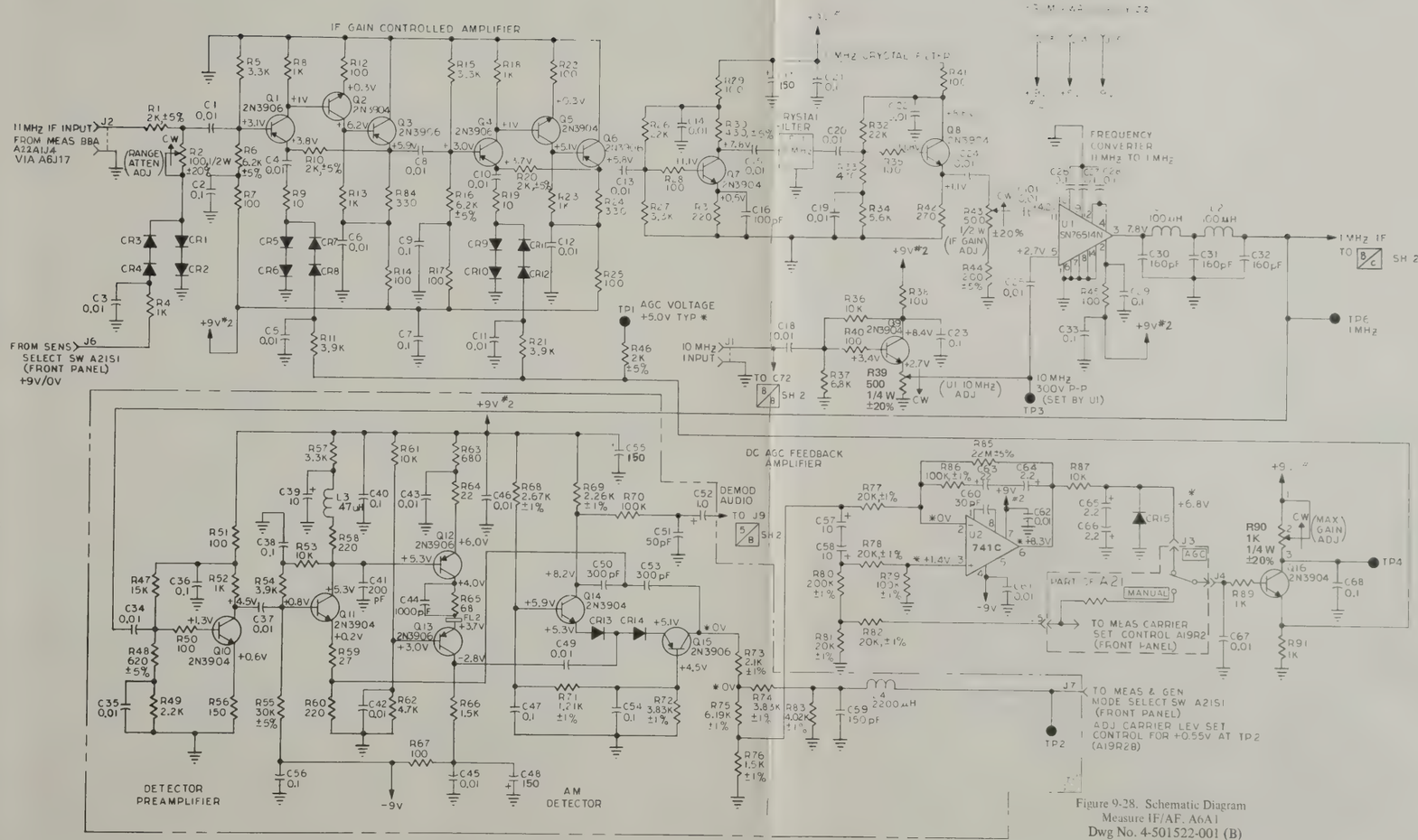

Figure 9-28. Schematic Diagram
Measure IF/AF, A6A1
Dwg No. 4-501522-001 (B)
(Sheet 1 of 2)

9-69/9-70

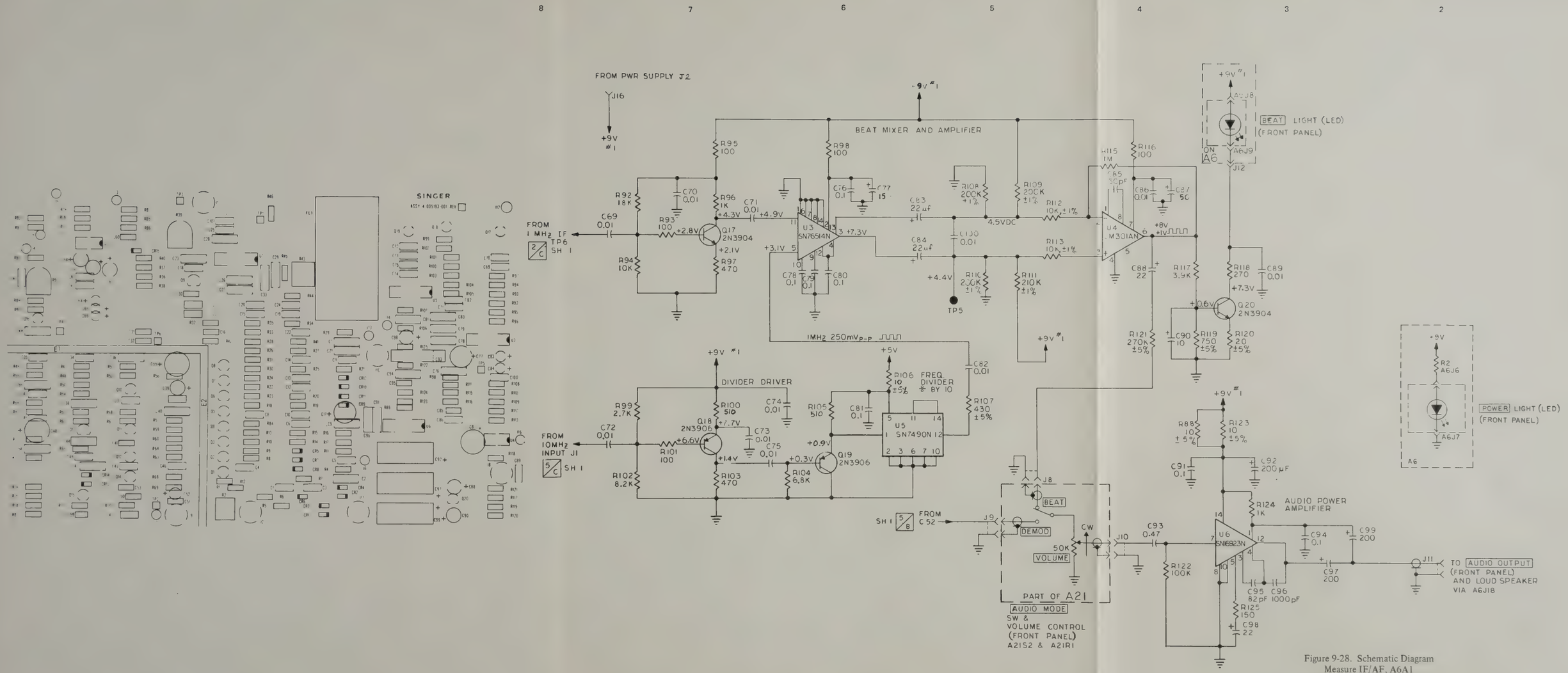

Figure 9-28. Schematic Diagram
Measure IF/AF, A6A1
Dwg No. 4-501522-001 (B)
(Sheet 2 of 2)

9-71/9-72

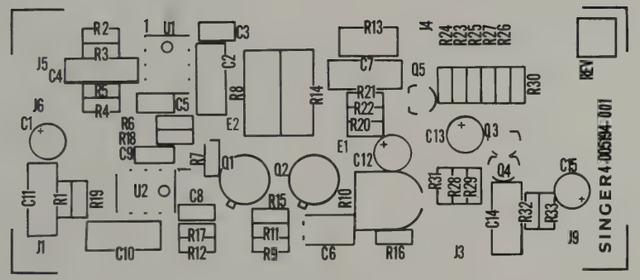

NOTES: UNLESS OTHERWISE SPECIFIED
1. ALL CAPACITOR VALUES ARE IN μF.
2. ALL RESISTOR VALUES ARE IN OHMS, ±10%, 1/4 W.
3. PARTIAL REFERENCE DESIGNATORS ARE SHOWN. FOR COMPLETE DESIGNATION, PREFIX WITH ASSY DES A6A2. EXAMPLE: R5 IS A6A2R5.
4. VOLTAGES SHOWN WITHOUT TOLERANCES ARE TYPICAL
5. DC VOLTAGES MEASURED WITH 10 MEGOHM METER, NO INPUT SIGNAL.

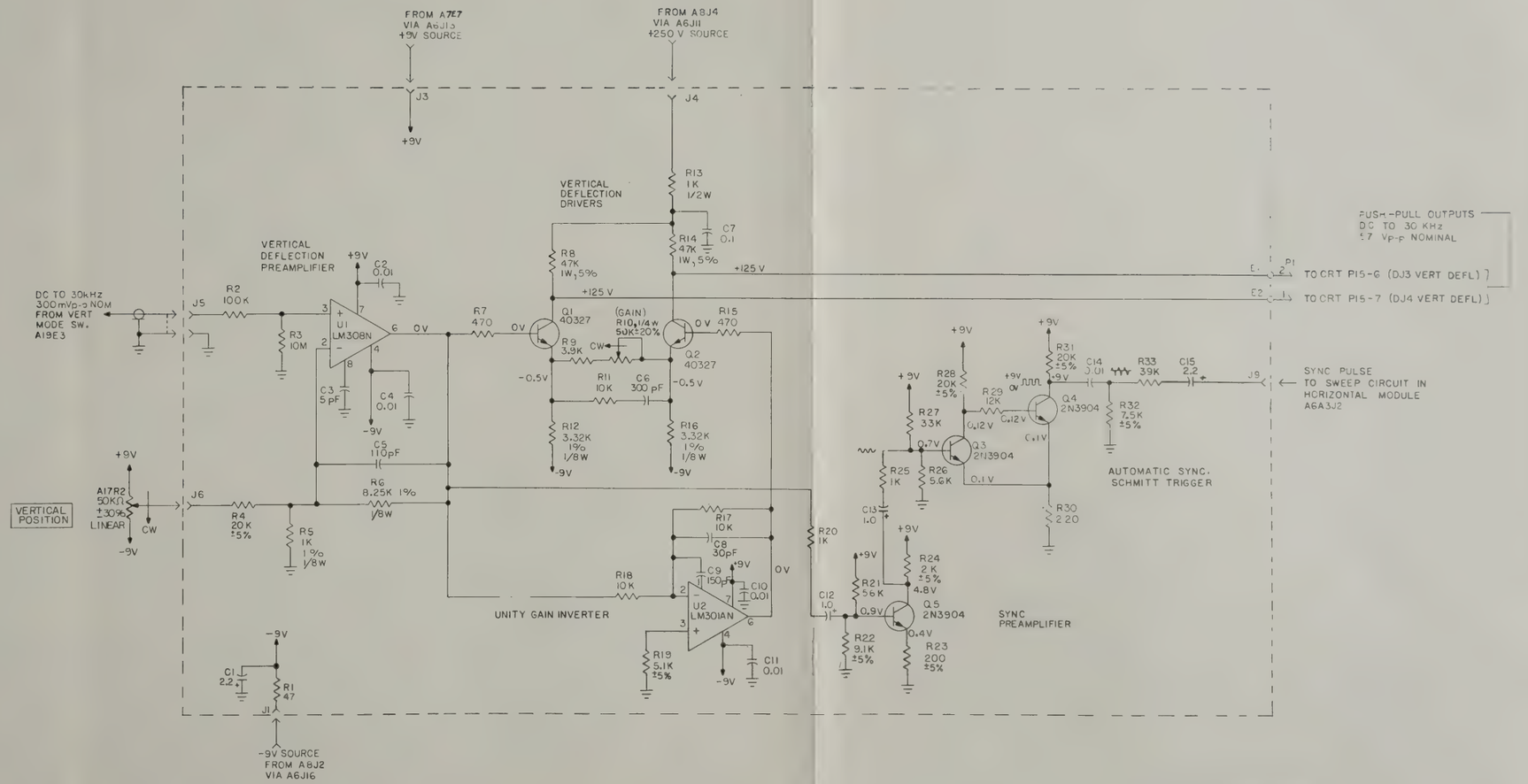

Figure 9-29. Schematic Diagram
Vertical Amplifier, A6A2
Dwg No. 4-501523-001 (A)

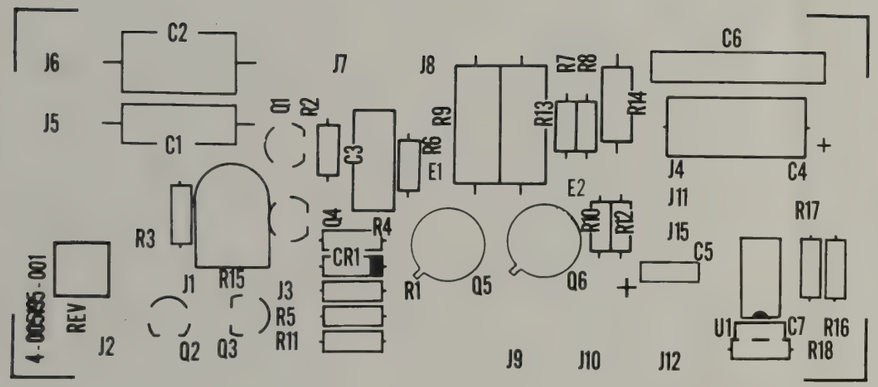

NOTES: UNLESS OTHERWISE SPECIFIED
1. ALL RESISTOR VALUES ARE OHMS, ±10%, 1/4 W.
2. ALL CAPACITORS ARE IN MICROFARADS.
3. PARTIAL REFERENCE DESIGNATORS ARE SHOWN, FOR COMPLETE DESIGNATION PREFIX WITH ASSY DES A6A3. EXAMPLE: C3 IS A6A3C3.
4. VOLTAGES SHOWN WITHOUT TOLERANCE ARE TYPICAL, INPUTS ARE NOMINAL.
5. DC VOLTAGES MEASURED WITH 10 MEGOHM METER.

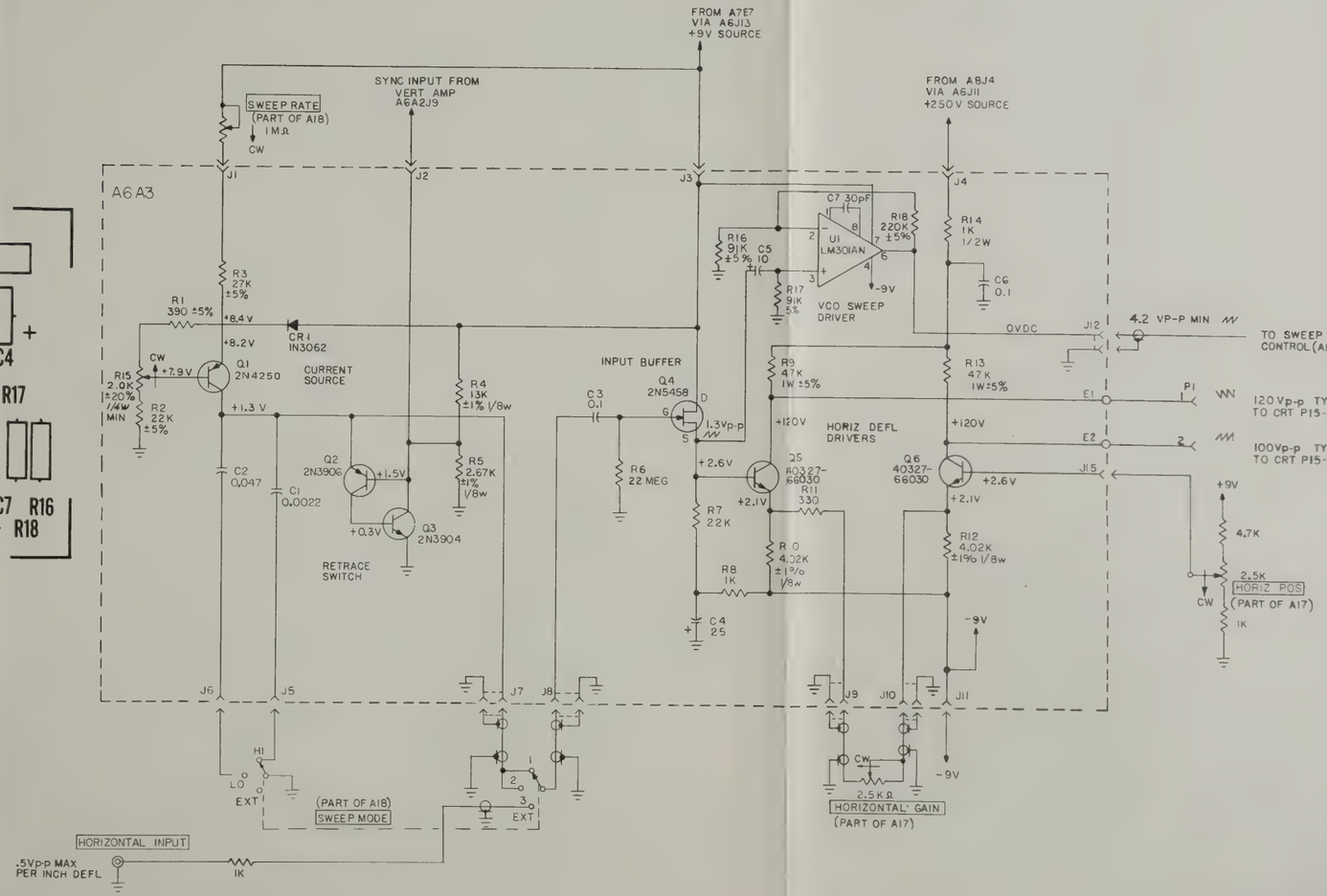

Figure 9-30. Schematic Diagram
Horizontal Amplifier, A6A3
Dwg No. 4-501524-001 (C)

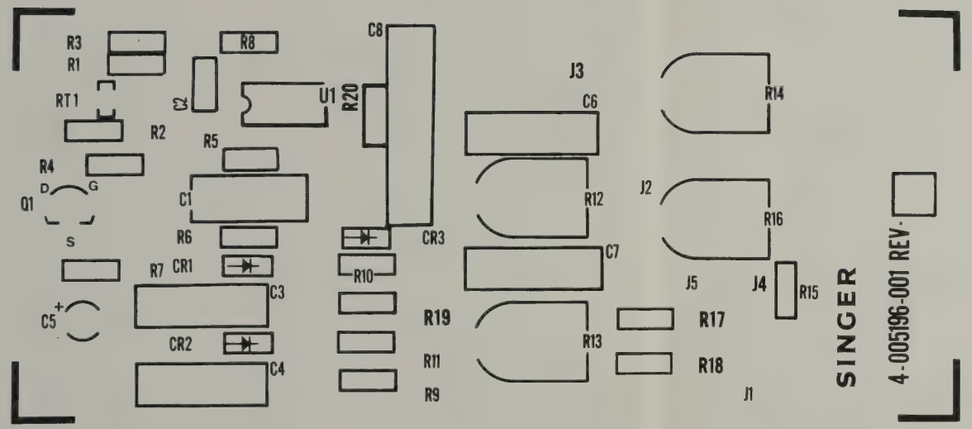

NOTES: UNLESS OTHERWISE SPECIFIED

1. PARTIAL REFERENCE DESIGNATORS ARE SHOWN, FOR COMPLETE DESIGNATION PREFIX WITH ASSY DES A6A4. EXAMPLE: R1 IS A6A4R1.
2. ALL DIODES ARE IN3062.
3. ALL RESISTOR VALUES ARE IN OHMS, 1/4 W, ±5%.
4. ALL CAPACITOR VALUES ARE IN MICROFARADS.

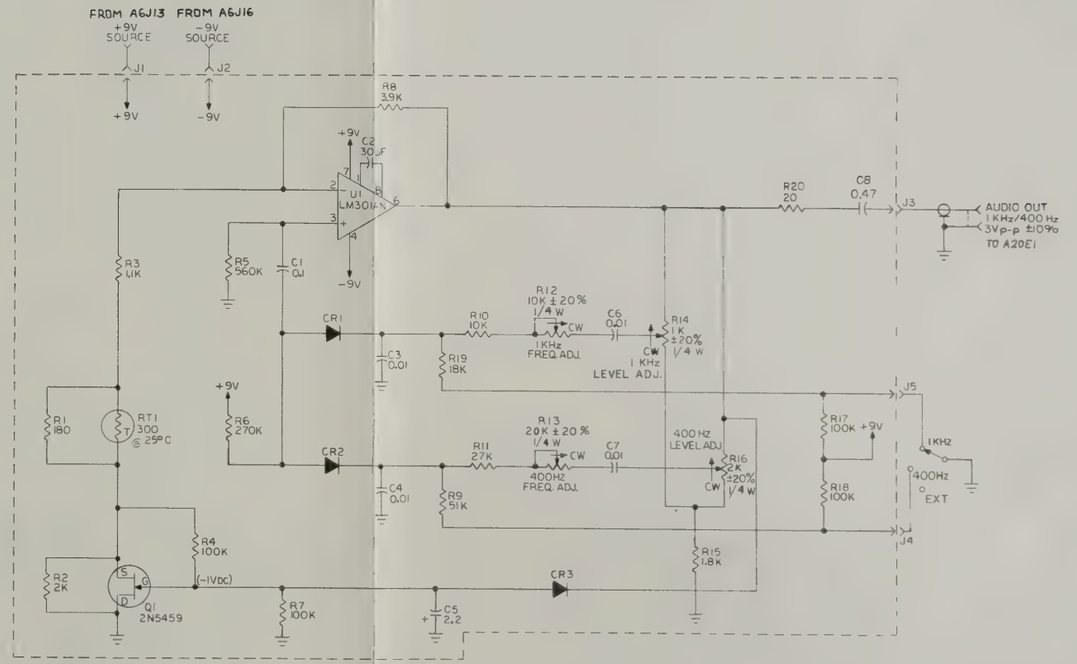

Figure 9-31. Schematic Diagram
Audio Oscillator, A6A4
Dwg No. 3-501525-001 (A)

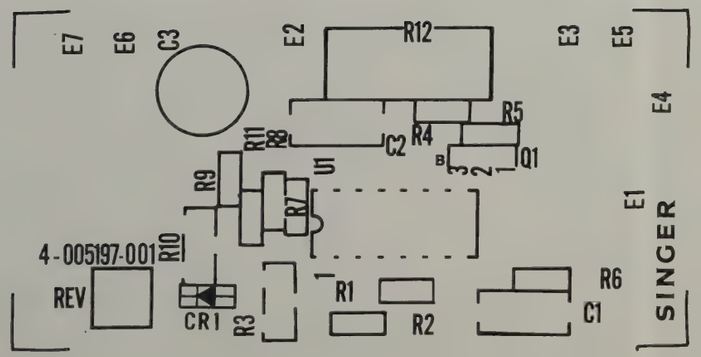

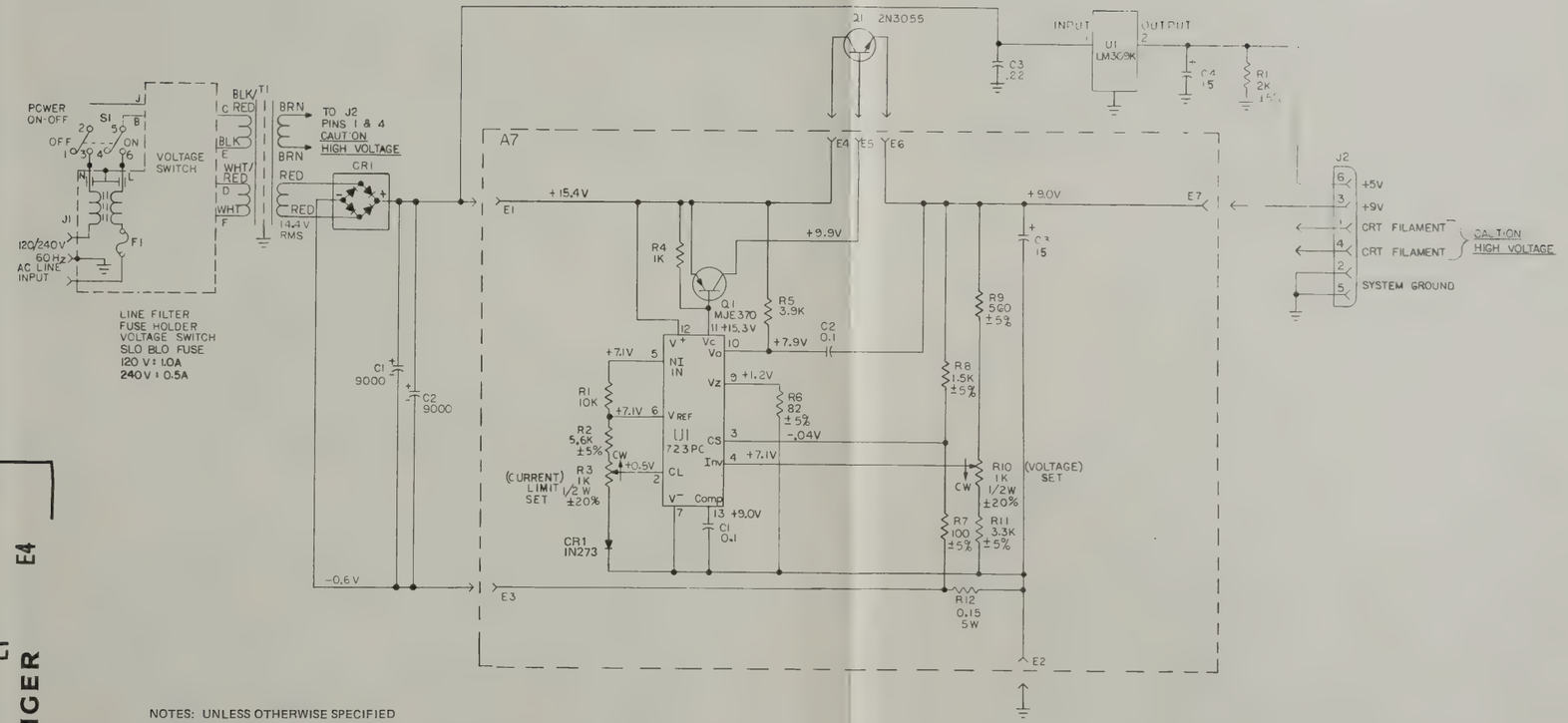

NOTES: UNLESS OTHERWISE SPECIFIED

1. ALL RESISTOR VALUES ARE OHMS, ±10%, 1/4 W.
2. ALL CAPACITORS VALUES ARE IN MICROFARADS.
3. PARTIAL REFERENCE DESIGNATORS ARE SHOWN. FOR COMPLETE DESIGNATION PREFIX WITH ASSY DES A7. EXAMPLE: C2 IS A7C2.
4. DC VOLTAGES ARE TYPICAL, MEASURED WITH 10 MEGOHM METER WITH 0.5 A LOAD ON +5 V AND 3.5 A LOAD ON +9 V.

Figure 9-32. Schematic Diagram
Power Supply Including A7
Dwg No. 4-501526-001 (B)

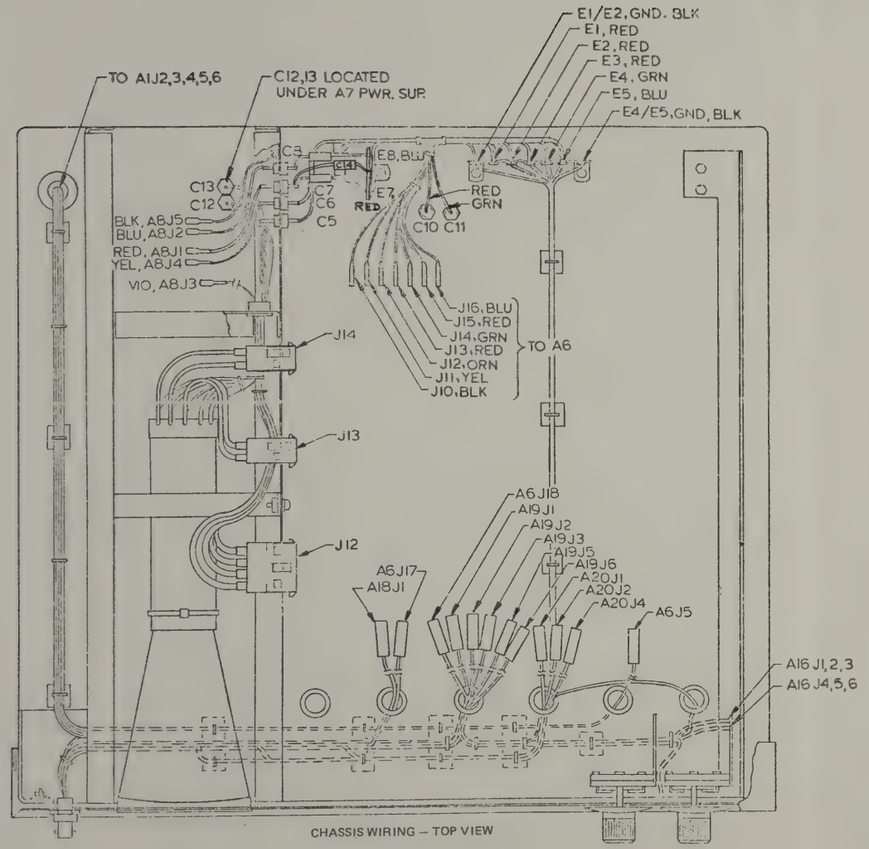

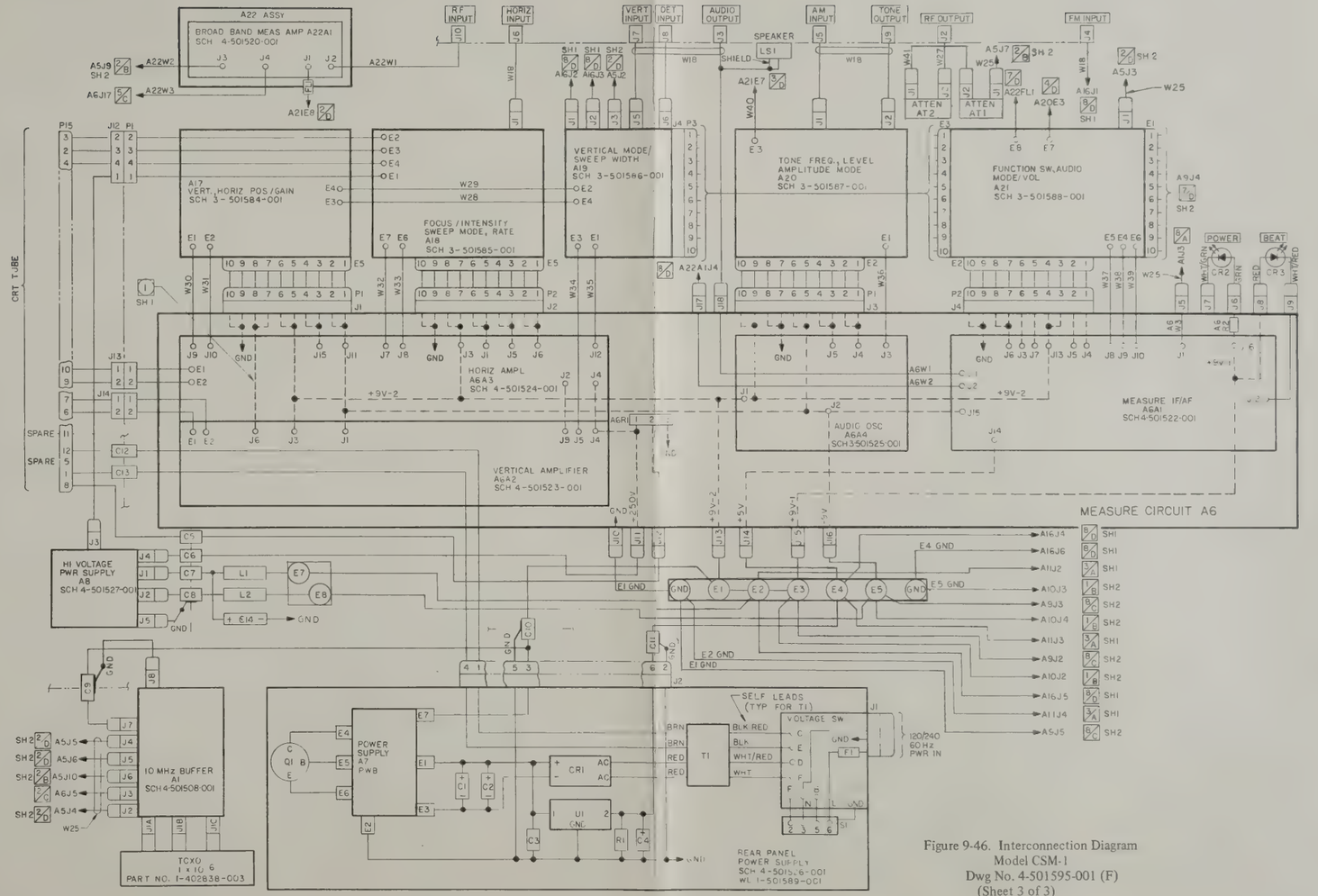

Figure 9-46. Interconnection Diagram
Model CSM-1
Dwg No. 4-501595-001 (F)
(Sheet 3 of 3)

APPENDIX A

LOGIC FOR DETERMINING DECADE OUTPUT FREQUENCIES – AN AID TO FAULT ISOLATION AND TROUBLESHOOTING

A.1 INTRODUCTION

This Appendix is provided as an aid in trouble-shooting the synthesizer section of the Model CSM-1. If the synthesizer output is inconsistent at some frequency switch settings, localizing the cause of the problem is greatly facilitated if the technician has specific knowledge of the arithmetic used in the synthesis process at each decade to formulate any given output frequency. He should make a careful survey of the symptoms noted such as irregularities of output frequency, level, noise or spurious content, as each decade frequency switch is rotated through each of its positions. When this information is analyzed carefully in view of the basic synthesis system, a pattern will usually emerge, pinpointing the source of the problem. Using this analytical approach, rather than attempting indiscriminate adjustment or component replacement, will avoid much wasted time and compounded difficulty.

A.2 VCO SUBSTITUTION

Any of the 4 lower decades, A2A2 (100 Hz), A2A3 (1 kHz), A2A4 (10 kHz) or A3A2 (100 kHz) may be replaced in the synthesis chain by the VCO by setting the corresponding decade frequency switch to V and varying the 0-100 Hz control through its active range. This will confirm or eliminate that decade as the source of the problem, assuming the VCO is functioning normally.

NOTE

With the exception of Paragraph A.2, the balance of this Appendix assumes the VCO is disabled by setting the 0-100 Hz control to OUT.

A.3 BASIC SYNTHESIS CHAIN

The basic synthesis chain through the seven decades is shown in simplified block diagram form in Figure A-1. Immediately below are formulae for each of the interface frequencies F_1 through F_6 and the output frequency F_{OUT}, as a function of the switchable input frequencies F_A through F_N and the two fixed input frequencies, 2.1 MHz and 810 MHz. The table below gives the value for each of the switchable input frequencies F_A through F_N for each position of each decade frequency switch.

Entering these values in the formula given for each decade, the interface frequencies F_1 through F_6 and the output frequency F_{OUT} may be calculated for any setting of the decade frequency switches.

Example 1: With the switches set to 123.4567, from the table in Figure A-1,

100 Hz decade (7): $F_1 = \frac{2.1 + 6.0 + 12.2}{10} = 2.03$ MHz

1 kHz decade (6): $F_2 = \frac{2.03 + 6.1 + 12.2}{10} = 2.033$ MHz

10 kHz decade (5): $F_3 = \frac{2.033 + 6.2 + 12.2}{10} = 2.0433$ MHz

100 kHz decade (4): $F_4 = 2.0433 + 6.3 + 12.2 = 20.5433$ MHz

1 MHz decade (3): $F_5 = 20.5433 + 60 + 126 = 206.5433$ MHz

10 MHz decade (2): $F_6 = 206.5433 - 80 + 810 - 160 = 776.5433$ MHz

100 MHz decade (1): $F_{OUT} = 900 - 776.5433 = 123.4567$ MHz

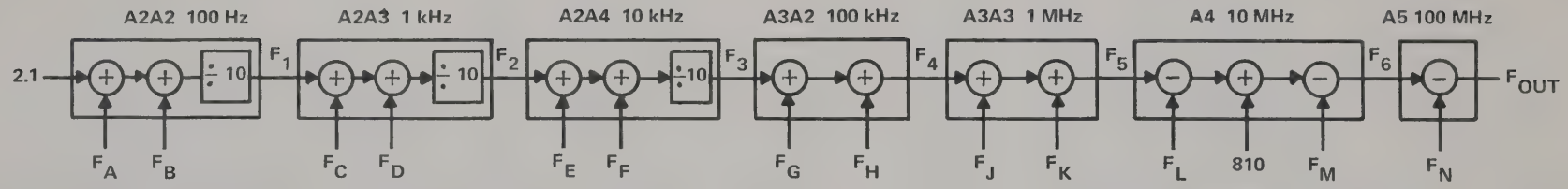

Freq. Switch Dial Position	$F_1 = \frac{2.1 + F_A + F_B}{10}$			$F_2 = \frac{F_1 + F_C + F_D}{10}$			$F_3 = \frac{F_2 + F_E + F_F}{10}$			$F_4 = F_3 + F_G + F_H$			$F_5 = F_4 + F_J + F_K$			$F_6 = F_5 - F_L + 810 - F_M$			$F_{OUT} = F_N - F_6$	
	F_A	F_B	F_1	F_C	F_D	F_2 (0)*	F_E	F_F	F_3 (0)*	F_G	F_H	F_4 (0)*	F_J	F_K	F_5 (0)*	F_L	F_M	F_6 (0)*	F_N	F_{OUT} (0)*
0	6.3	12.6	2.1	6.3	12.6	2.1	6.3	12.6	2.1	6.3	12.6	21	63	126	210	80	140	800	800	0
1	6.2	12.6	2.09	6.2	12.6	2.09	6.2	12.6	2.09	6.2	12.6	20.9	62	126	209	90	140	790	900	100
2	6.1	12.6	2.08	6.1	12.6	2.08	6.1	12.6	2.08	6.1	12.6	20.8	61	126	208	80	160	780	1000	200
3	6.0	12.6	2.07	6.0	12.6	2.07	6.0	12.6	2.07	6.0	12.6	20.7	60	126	207	90	160	770	1100	300
4	6.3	12.2	2.06	6.3	12.2	2.06	6.3	12.2	2.06	6.3	12.2	20.6	63	122	206	80	180	760	1200	400
5	6.2	12.2	2.05	6.2	12.2	2.05	6.2	12.2	2.05	6.2	12.2	20.5	62	122	205	90	180	750	1300	500
6	6.1	12.2	2.04	6.1	12.2	2.04	6.1	12.2	2.04	6.1	12.2	20.4	61	122	204	80	200	740	ALL FREQUENCIES GIVEN IN MHz	
7	6.0	12.2	2.03	6.0	12.2	20.3	6.0	12.2	2.03	6.0	12.2	20.3	60	122	203	90	200	730		
8	6.1	12.0	2.02	6.1	12.0	2.02	6.1	12.0	2.02	6.1	12.0	2.02	61	120	202	80	220	720		
9	6.0	12.0	2.01	6.0	12.0	2.01	6.0	12.0	2.01	6.0	12.0	20.1	60	120	201	90	220	710		

NOTE: 0-100 Hz dial set to OUT. *All less significant frequency switches set to 0.

Figure A-1. CSM-1 Overall Frequency Synthesis System

For convenience, the table gives values of the interface frequencies calculated from the formulae. F_1 is valid at all times. $F_2(0)$ through $F_{OUT}(0)$ are valid only when all less significant frequency switches are set to 0. Thus when several lower decades are at 0, it is not necessary to use the formula; the corresponding interface frequencies may be looked up directly from the table.

Example 2: With the switches set to 400.0000 (400 MHz), all interface frequencies and the output frequency may be obtained directly from table:

100 Hz decade (0): $F_1 = 2.1$ MHz

1 kHz decade (0): $F_2(0) = 2.1$ MHz

10 kHz decade (0): $F_3(0) = 2.1$ MHz

100 kHz decade (0): $F_4(0) = 21$ MHz

1 MHz decade (0): $F_5(0) = 210$ MHz

10 MHz decade (0): $F_6(0) = 800$ MHz

100 MHz decade (4): $F_{OUT}(0) = 400$ MHz

Example 3: With the switches set to 351.0000 (351 MHz), the output from the 100 kHz decade $F_4(0)$ is 21 MHz, and the lower interface frequencies are also the same as in the example 2.

1 MHz decade (1): $F_5(0) = 209$

10 MHz decade (5): $F_6 = 209\text{-}90\text{+}810\text{-}180 = 749$ MHz

100 MHz decade (3): $F_{OUT} = 1100\text{-}749 = 351$ MHz

Note that $F_5(0)$ may be obtained from the table since all less significant decades are at 0. However F_6 must be calculated by entering the values for F_L and F_M into the formula and F_{OUT} must be calculated by entering F_N, because a lower decade (1 MHz) is not at 0.

APPENDIX B

SPUR ANALYSIS AND GUIDE FOR SPUR REDUCTION IN THE SYNTHESIZER PORTION OF THE CSM-1

B.1 A4/A5 DECK PAIR

B.1.1 Summary of Predominant Spurs

a. 10 MHz Decade Spurs

The predominant 10 MHz decade spurs are:

(1) 80 MHz feedthrough through 110–130 MHz bandpass filter (present with the 10 MHz decade switch in 0, 2, 4, 6, 8 position).

(2) 90 MHz feedthrough through 110–130 MHz bandpass filter (present with the 10 MHz decade switch in 1, 3, 5, 7, 9 position).

(3) 4 fx – f_L IM spur in A4A1Z1 mixer (f_L: 200–210 MHz; fx: 80 or 90 MHz).

(4) ±10 MHz sidebands on 80 MHz or 90 MHz signal (if these spurs appear only in the 0, 2, 4, 6, or 8 positions of the 10 MHz decade switch, they are caused by the 80 MHz multiplier A4A7; if they appear only in the 1, 3, 5, 7, 9 positions, they are caused by the 90 MHz multiplier A4A8).

(5) ±90 MHz sidebands on 810 MHz multiplier A4A2/A4A3.

(6) ±10 MHz sidebands on 140, 160, 180, 200, 220 MHz multipliers.

(7) 210 MHz ($\frac{3}{2}$ fo) spur of 140 MHz multiplier (present in the 0, 1 positions of the 10 MHz decade switch).

(8) 240 MHz ($\frac{3}{2}$ fo) spur of 160 MHz multiplier (present in the 2, 3 positions of the 10 MHz decade switch).

(9) Fourth harmonic of 180 MHz (720 MHz), and 200 MHz (800 MHz), and fifth harmonic of 140 MHz (700 MHz), and 180 MHz (800 MHz) at A4A5 module output (X-port of A4Z2 mixer).

(10) 2 f_L – 3 f_X IM product of A4A1Z1 mixer.

(11) 110 MHz subharmonic of 220 MHz (A4A10) multiplier.

(12) Second harmonic of 110–130 MHz amplifier of A4A1 10 MHz decade input module.

(13) Leakage from 920–940 MHz (A4A4) amplifier directly into gain controlled 700-800 MHz amplifier (A4A10), and into R-port of A5Z1 mixer.

(14) Self oscillation of 920–940 MHz (A4A4) amplifier.

(15) 2 f_L – 6 f_X IM product of A4Z1 mixer.

(16) 8 f_X – f_L IM product of A4Z2 mixer.

(17) 2 f_L – 5 f_X IM product of A4Z2 mixer.

b. 100 MHz Decade Spurs

(1) 2 f_R – f_L IM spur created in A5Z1 mixer (f_L: 0.8, 0.9, 1.0, 1.1, 1.2, 1.3 GHz; f_R: 700–800 MHz)

(2) 3 f_R – 2 f_L IM spur created in A5Z1 mixer (f_L and f_R as shown in 1).

(3) ±100 MHz sidebands on high frequency multipliers.

(4) Spurs at 100.00 MHz, 200.00 MHz, 300.00 MHz, 400.00 MHz, and 500.00 MHz due to detection of N x 100 MHz frequency – and/or amplitude modulation of high frequency multipliers by A5Z1 mixer (dc offset voltage).

(5) 810 MHz signal feedthrough into A5Z1 mixer.

(6) Microwave IM products of A5Z1 mixer, with the mixing occurring in the frequency range above 2.5 GHz.

B.1.2 Procedure for Reduction of Predominant Spurs

a. 10 MHz Decade Spur Reduction (Refer to Paragraph B.1.1a.)

All spurs described here shall be at least 55 dB below the main signal, except for the ±10 MHz spurs, which have to be at least 60 dB below the carrier. These levels guarantee that all spurs on the CSM-1 output are at least 50 dBc below the carrier.

(1) and (2) spurs – The 80 MHz or 90 MHz signals feed directly through the A4A1Z1 mixer and through the 110–130 MHz bandpass filter of

the A4A1 PC board into the X-port of the A4Z1 mixer where they mix with the 810 MHz L-port signal. The converted frequencies 890 MHz and 900 MHz get further rejected by the 920–940 MHz filter.

The levels of the 80 and 90 MHz spurs are reduced by:

(a) The X → R isolation of the A4A1Z1 mixer (20 dB min).

(b) The rejection of the 110–130 MHz bandpass filter for 80 and 90 MHz (40 dB min).

(c) The rejection of the 890 MHz and 900 MHz signals by the 920–940 MHz bandpass filter (5 dB min).

If the spur level is excessive, check the X-R isolation of the mixer A4A1Z1 with a +7 dBm LO level applied. If it is not >2 dB, exchange the mixer.

Check the 90 MHz rejection of the 110–130 MHz filter by connecting a signal generator through an adapter to the R-port output connector of the A4A1Z1 mixer. If the rejection is not at least 40 dB, exchange A4A1.

Check the rejection of the 920–940 MHz bandpass filter for a 900 MHz signal by connecting a signal generator to the R-port output connector of A4Z1 and a Spectrum Analyzer to the L-port of A4Z2. Fine tune A4A4C5 to obtain 5 dB min rejection at 900 MHz.

(3) spur – The 4 $f_X - f_L$ spur is either an IM product created by the A4A1Z1 mixer itself or is caused by an excessive 4th harmonic of either the 80 or the 90 MHz signal (the predominant signal here would be the 80 MHz).

Remove the A4A1Z1 mixer and check the harmonic level at the X-port input pin. If the 4th harmonic level is below the 60 dBc level, the mixer is creating the spur. Therefore, exchange the mixer. If the 4th harmonic level is excessive above the 60 dBc level, change the A4A1 PC board.

(4) spur – The ±10 MHz sidebands on the 80 and 90 MHz multipliers are reduced by fine tuning of A4A7C6, A4A7C8, A4A7C18, A4A8C6, A4A8C8, or A4A8C18. Make sure that the cover of these multipliers is properly in place before fine tuning C6, C8, and C18.

(5) spur – The ±90 MHz sidebands are reduced by adjusting the output filters of A4A3 (coaxial filters), by slightly moving the center conductors of the coaxial cavities.

(6) spur – The ±10 MHz sidebands of the 140–220 MHz multipliers are reduced as described under (4).

(7) and (8) spurs – The 210 and 240 MHz spur levels of the 140 MHz and 160 MHz multipliers are checked on the X-port connector of A4Z2. If excessive, carefully fine adjust C12 and C15 of the particular multiplier.

(9) spur – The harmonics are caused mainly by the modulator A4A5Z1 and the RF amplifier A4A5Q8. The lowpass filter consisting of C39, C40, C41, L8 and L9 suppresses harmonics in the 600–900 MHz range at least 45 dB. If spurs due to harmonics are excessive, expand or compress L8 and L9 if necessary, while measuring the signal to harmonic ratio at the X-port of A4Z2. Harmonics should be at least 50 dB below the main signal.

(10) spur – The 2 $f_L - 3\ f_X$ IM product of the A4A1Z1 mixer falls in-band of the 110–130 MHz output frequency range of the A4A1 module when the main signal is at 110 MHz (90 MHz multiplier selected, 200 MHz input from A3 deck, equivalent to a CSM-1 frequency setting of x19.99xx, x39.99xx, x59.99xx, x79.99xx, and x99.99xx).

(11) spur – The signal to spur ratio at the X-port of A4Z1 has to be >55 dB. If not, check signal level at X-port of A4A1Z1 (80, 90 MHz signal level between –10 dBm and –12 dBm), and L.O. level at L-port of A4A1Z1 (200–210 MHz signal level from A3 deck between +5 dBm and +9 dBm). If signal levels O.K., slightly adjust R49 while watching the signal to spur ratio and maximize it while keeping the signal level at the A4Z1 X-port between –10 dBm and –13 dBm. If the spur level is still too high, exchange A4A1Z1.

(12) spur – Second harmonic of 110–130 MHz output signal at A4Z1 X-port should be at least 34 dB below the main signal with the main signal at 110 MHz (CSM-1 dials at x99.99xx). If not, slightly tune A4A1C71, and if this is not sufficient – change A4A1Q7.

(13) spur – The spur frequency is always below the main output signal frequency by either 140 MHz (10 MHz dial in 0 or 1 position), 160 MHz (10 MHz dial in 2 or 3 position), 180 MHz (10 MHz dial in 4 or 5 position), 200 MHz (10 MHz dial in 6 or 7 position), or 220 MHz (10 MHz dial in 8 or 9 position). Make sure that cover of A4A4 tuned amplifier module, and A4A11 gain controlled amplifier module are properly installed. If not, remove covers and reinstall properly.

(14) spur – Self-oscillation appears as "breakup" of main signal (many spectral lines close

together instead of one line above). Exchange A4A4 module.

(15) spur – The 2 $f_L - 6\ f_X$ IM product of the A4Z1 mixer is checked at the L-port of the A4Z2 mixer. With the CSM-1 dials set to x15.0xxx, x35.0xxx, x55.0xxx, x75.0xxx, or x95.0xxx, the spur is 5 MHz below the main signal. If the signal to spur ratio is <55 dB, check the levels at the X-port of A4Z1 (between –10 dBm and –13 dBm), and on the L-port of A4Z1 (between +5 dBm and +9 dBm). If levels are O.K., change A4Z1 mixer.

(16) and (17) spurs – The two A4Z2 mixer IM products $8\ f_X - f_L$ and $2\ f_L - 5\ f_X$ will only show up if the A4Z2 mixer is damaged or if the input impedance of the GCA shows a resonance in the 1.6 GHz range. The maximum $8\ f_X - f_L$ spur is observed with the CSM-1 dials at x79.99xx. The spur will appear 40 MHz higher. The signal to spur ratio is checked at the CSM-1 output, if <55 dBc, first change A4Z2. If the spur level is still excessive, change A4A11.

Figure B-1 shows the signal frequency location, the spur frequency location, and acceptable maximum levels at the X-port of the A4A1Z1 mixer. Figure B-2 shows the output spectrum of the A4A1 module as a function of the 1 MHz dial setting due to the IM products of the A4A1Z1 mixer, and the 80 MHz and 90 MHz feedthrough spurs. Figure B-3 shows the same output spectrum with the IM products of higher than 5th order eliminated, and the 10 MHz dial in 0, 2, 4, 6, or 8 position. Figure B-4 shows this output spectrum with the MHz dial in 1, 3, 5, 7, or 9 position. Figure B-5 shows the output spectrum of the 810 MHz multiplier (at L-port of A4Z1 mixer). Figure B-6 shows the output spectrum at the X-port connector of the A4Z2 mixer. Figure B-7 shows the output spectrum at the L-port connector of the A5Z1 mixer.

b. *100 MHz Decade Spur Reduction (Refer to Paragraph B.1.1b.)*

(1) and (2) spurs – Check first the gain of the broadband amplifier. If the gain is within limits (33 dB ±2 dB), check the power level out of the high frequency multipliers; if the power level is within limits (+5 dBm to +8 dBm), exchange the mixer A5Z1.

(3) spur – To reduce the 100 MHz sidebands, make sure the multiplier covers are properly installed. If necessary, solder the cover to the protruding partitions. Fine tune the center conductors of the two cavity filters, and fine tune C16, then C12, then C8 to reduce the 100 MHz sidebands while maintaining the power level of the main output signal between +5 dBm and +8 dBm.

(4) spurs – These spurs are also caused by the 100 MHz sidebands and depend on the L-port to X-port balance of the A5Z1 mixer and the variation of this balance with L.O. frequency. Due to the imperfect balance (and the variation of this imperfect balance with L.O. frequency) there is a mixing action of the 100 MHz sidebands with the L.O. signal. Since the ratio of the L.O. signal level at the L-port and the RF signal level at the R-port is ≥30 dB, the "conversion loss" for this mixing action has to be at least 40 dB or higher. Therefore, if these n x 100 MHz spur levels are excessive, exchange the A5Z1 mixer for a mixer with a specified conversion loss for two signals applied to the L-port of at least 40 dB.

(5) spur – Check the L→R isolation of the A4Z1 mixer for 810 MHz. It should be 30 dB minimum. If the L→R isolation is O.K., check the rejection of the 920–940 MHz bandpass filter to a 810 MHz signal by feeding a 810 MHz signal in through a SMB→BNC adapter at the R-port output connector on A4Z1 and by measuring the output level through a SMB→BNC adapter on the L-port input connector of the A4Z2 mixer. Should be 40 dB minimum. Since the spur appears only on one side of the main signal, the limiting action on the L-port on A4Z2 should produce two symmetrical spurs on the R-port output at least 36 dB less in level than at the L-port of the A4Z2 mixer. Check L→R isolation on A4Z2. Should be at least 30 dB minimum. The 700-800 MHz coaxial filter should reject the 810 MHz signal 5 dB minimum. If all these rejections and isolations are within specifications the 80 MHz direct feedthrough spur should be at least 57 dBc down.

(6) spur – The spur analysis of the A5Z1 mixer shows that there are many in-band IM products possible, besides the $2\ f_R - f_L$ and $3\ f_R - 2\ f_L$ products discussed in (1) and (2): $2\ f_L - 4\ f_R$, $3\ f_L - 4\ f_R$, $3\ f_L - 5\ f_R$, $4\ f_L - 5\ f_R$, $4\ f_L - 6\ f_R$, $5\ f_L - 6\ f_R$, etc. The frequency range where the mixing occurs is above 2.5 GHz, and these IM products, therefore, are called "microwave" IM products. Their levels are nominally >70 dB below the main output signal. However, if the X-port terminating impedance varies abruptly with frequency (both amplitude and phase) at microwave frequencies, the mixing products which would mix at these frequencies are emphasized and can cause excessive spurs. If any of these spurs are found, determine their mixing frequency range. Remove the A5Z1 mixer and measure the input impedance of the X-port at these frequencies.

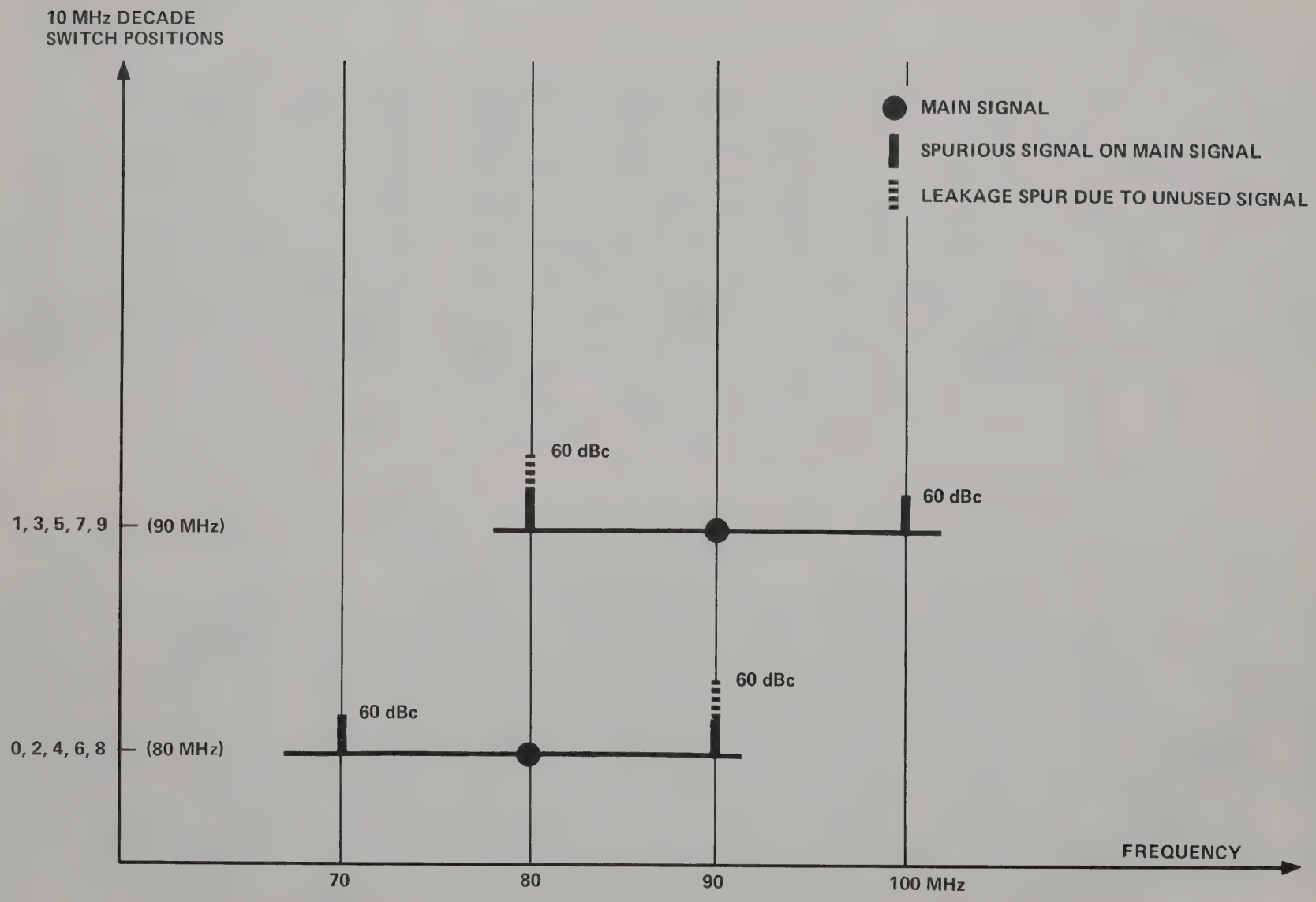

Figure B-1. Output Spectrum at X Port Input Connector of A4A1Z1 Mixer

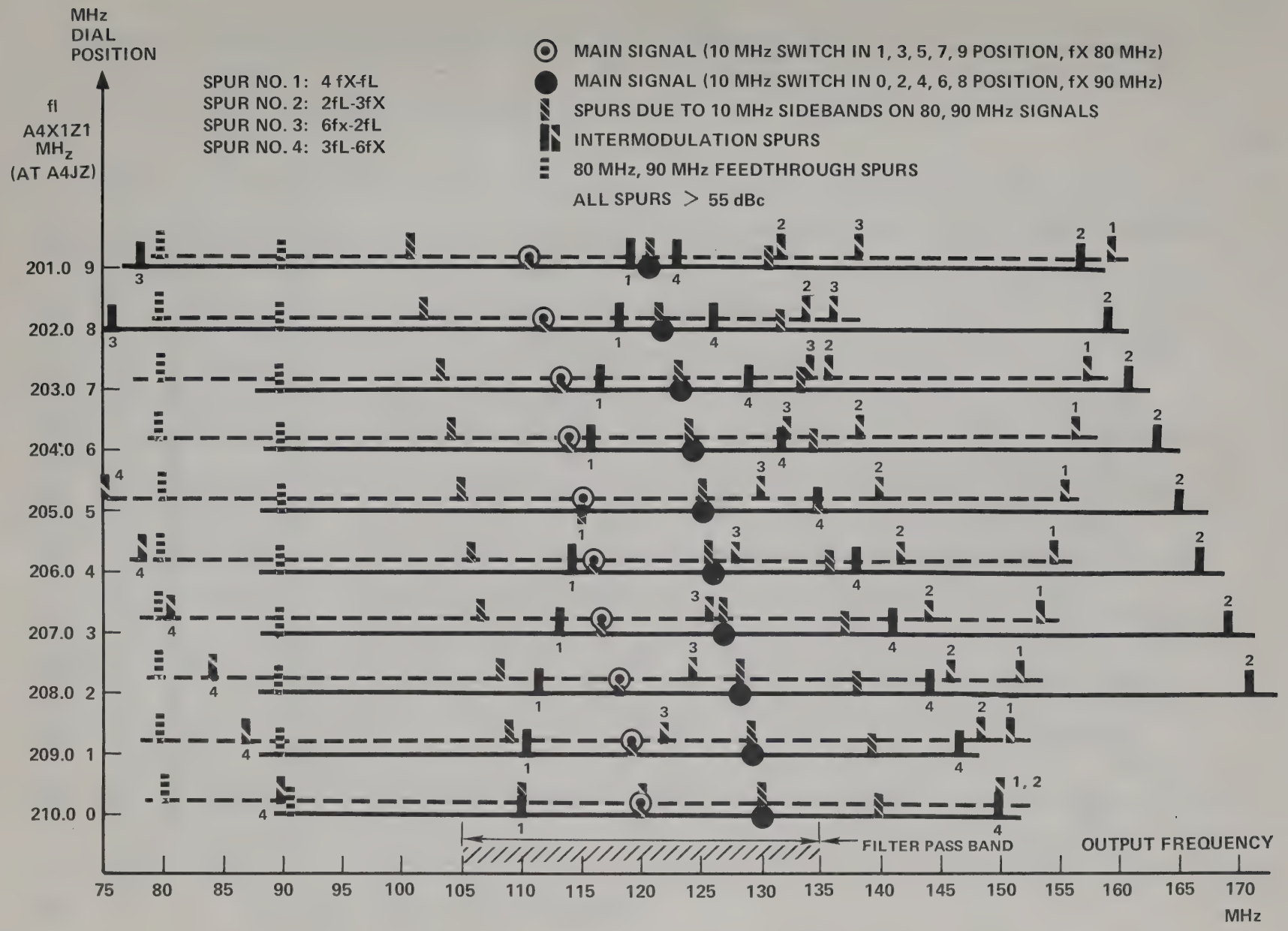
MHz
DIAL
POSITION
fl
A4X1Z1
MHz
(AT A4JZ)
SPUR NO. 1: 4 fX-fL
SPUR NO. 2: 2fL-3fX
SPUR NO. 3: 6fx-2fL
SPUR NO. 4: 3fL-6fX
MAIN SIGNAL (10 MHz SWITCH IN 1, 3, 5, 7, 9 POSITION, fX 80 MHz)
MAIN SIGNAL (10 MHz SWITCH IN 0, 2, 4, 6, 8 POSITION, fX 90 MHz)
SPURS DUE TO 10 MHz SIDEBANDS ON 80, 90 MHz SIGNALS
INTERMODULATION SPURS
80 MHz, 90 MHz FEEDTHROUGH SPURS
ALL SPURS > 55 dBc
201.0 9
202.0 8
203.0 7
204.0 6
205.0 5
206.0 4
207.0 3
208.0 2
209.0 1
210.0 0
FILTER PASS BAND
OUTPUT FREQUENCY
75 80 85 90 95 100 105 110 115 120 125 130 135 140 145 150 155 160 165 170
MHz

Figure B-2. Output Spectrum of A4A1 Module (at X Port of A4Z1 mixer) as a Function of 1 MHz Dial Setting Due to IM Products of the A4A1Z1 Mixer and 80 MHz and 90 MHz Feedthrough Spurs

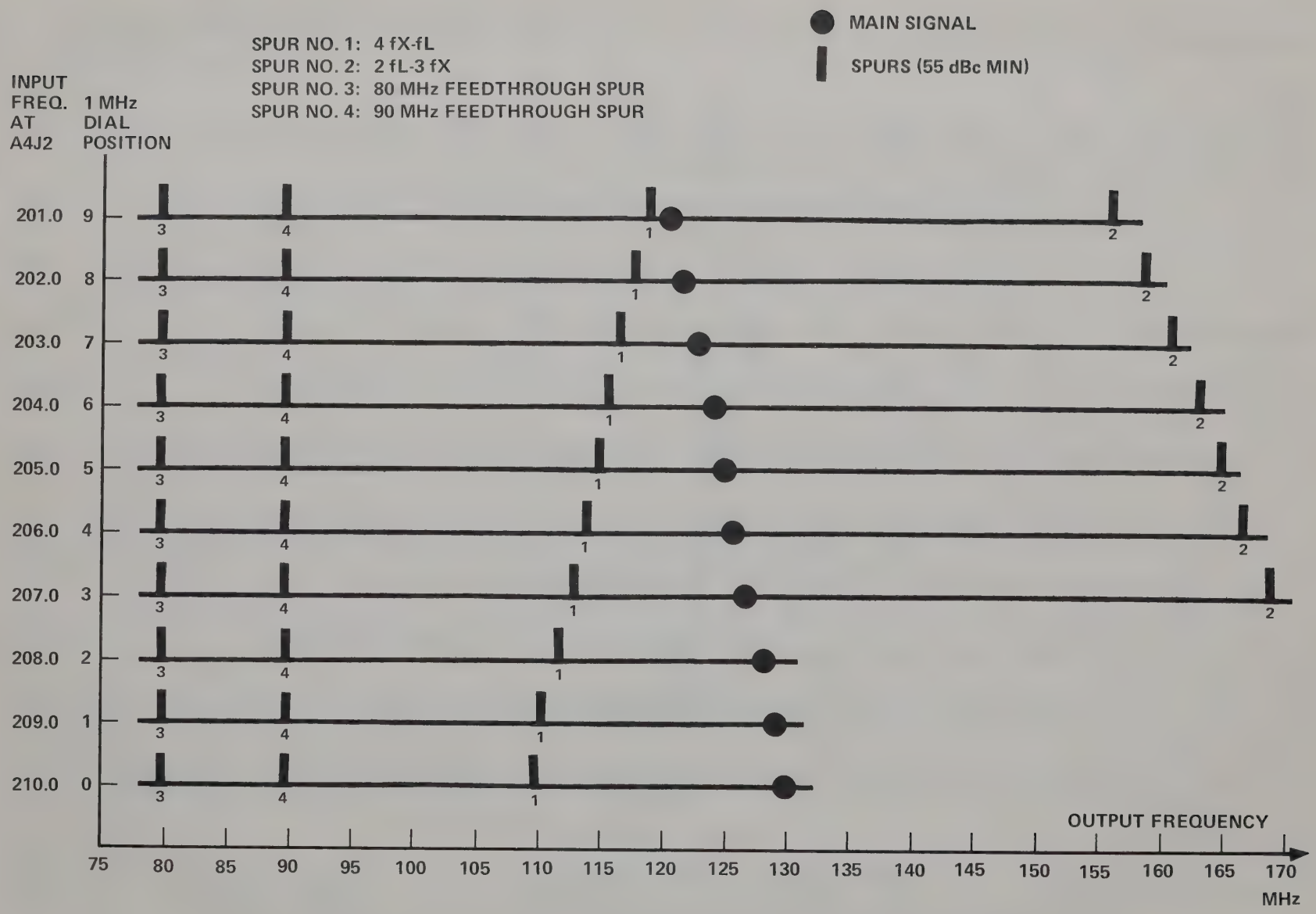

Figure B-3. Output Spectrum of A4A1 Module (At X Port of A4Z1 Mixer) as a Function of 1 MHz Dial Setting (or A4J Input Frequency) with 10 MHz Dial at 0, 2, 4, 6, or 8

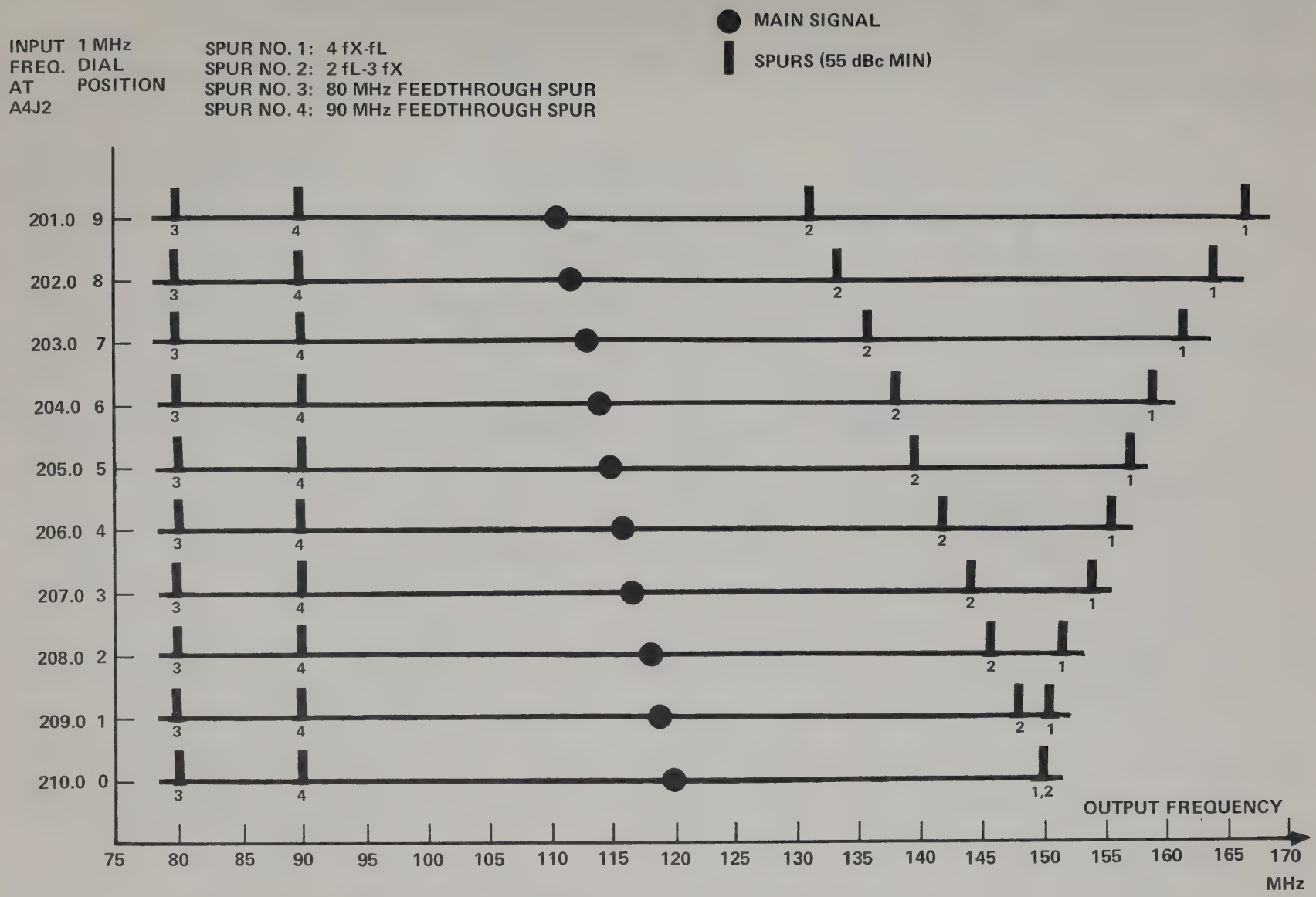

Figure B-4. Output Spectrum of A4A1 Module (at X Port of A4Z1 Mixer) as a Function of 1 MHz Dial Setting (or A4J Input Frequency) with 10 MHz Dial at 1, 3, 5, 7, or 9

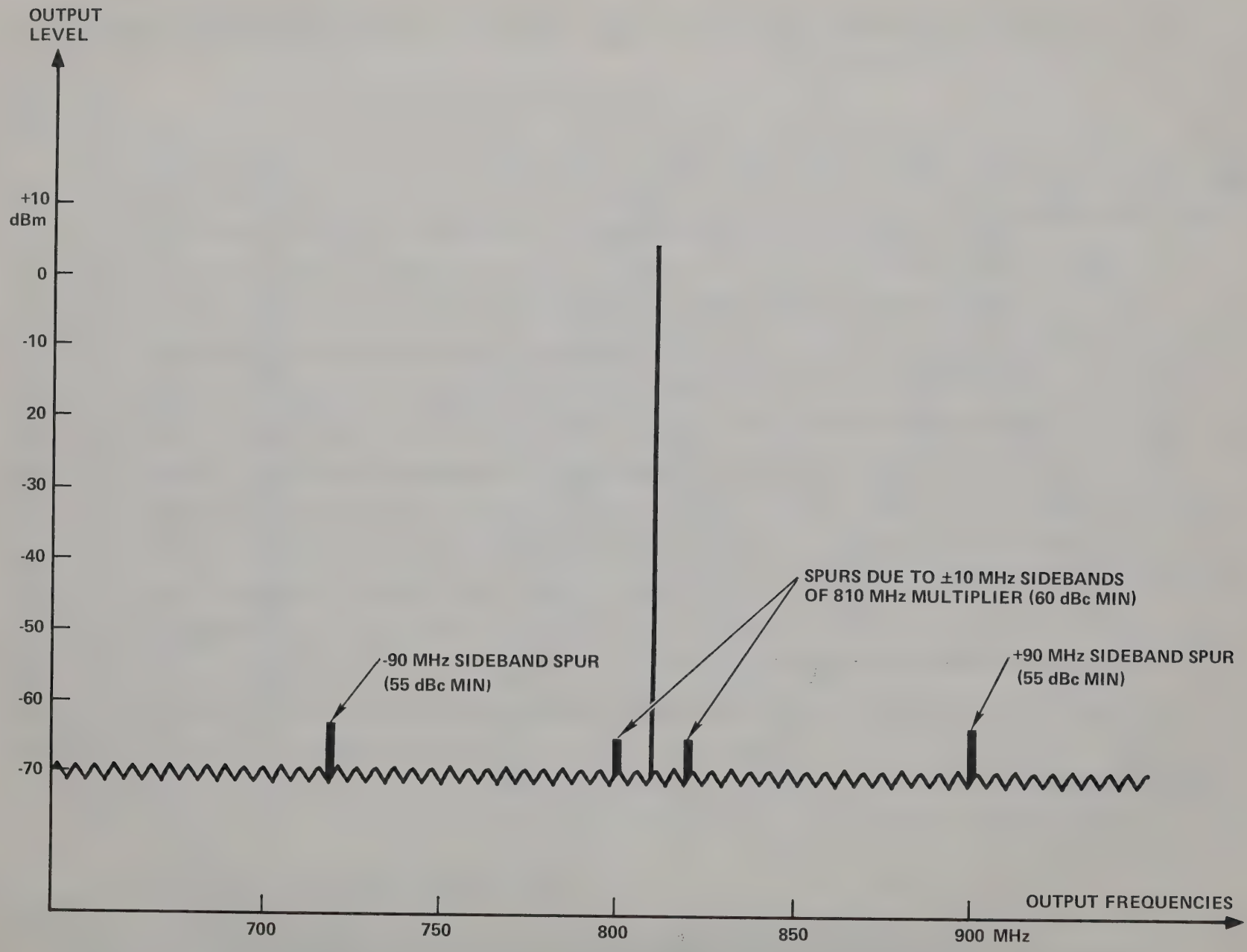

Figure B-5. Output Spectrum at L Port Input to A4Z1 Mixer Showing Maximum Level of Spurs

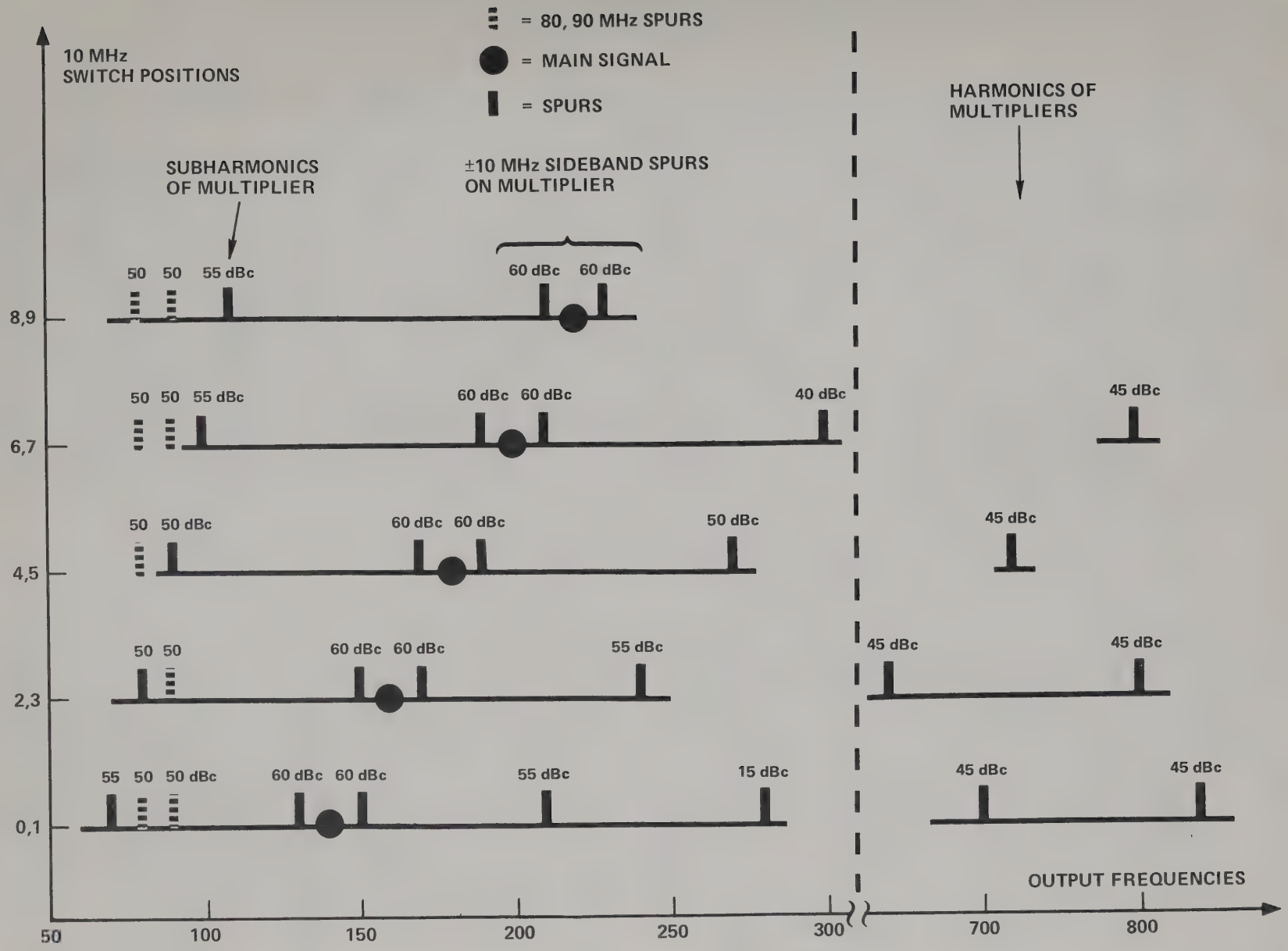

Figure B-6. Output Spectrum at X Port Input Connector of A4Z2 Mixer (Leakage spurs of unused fixed frequencies not shown)

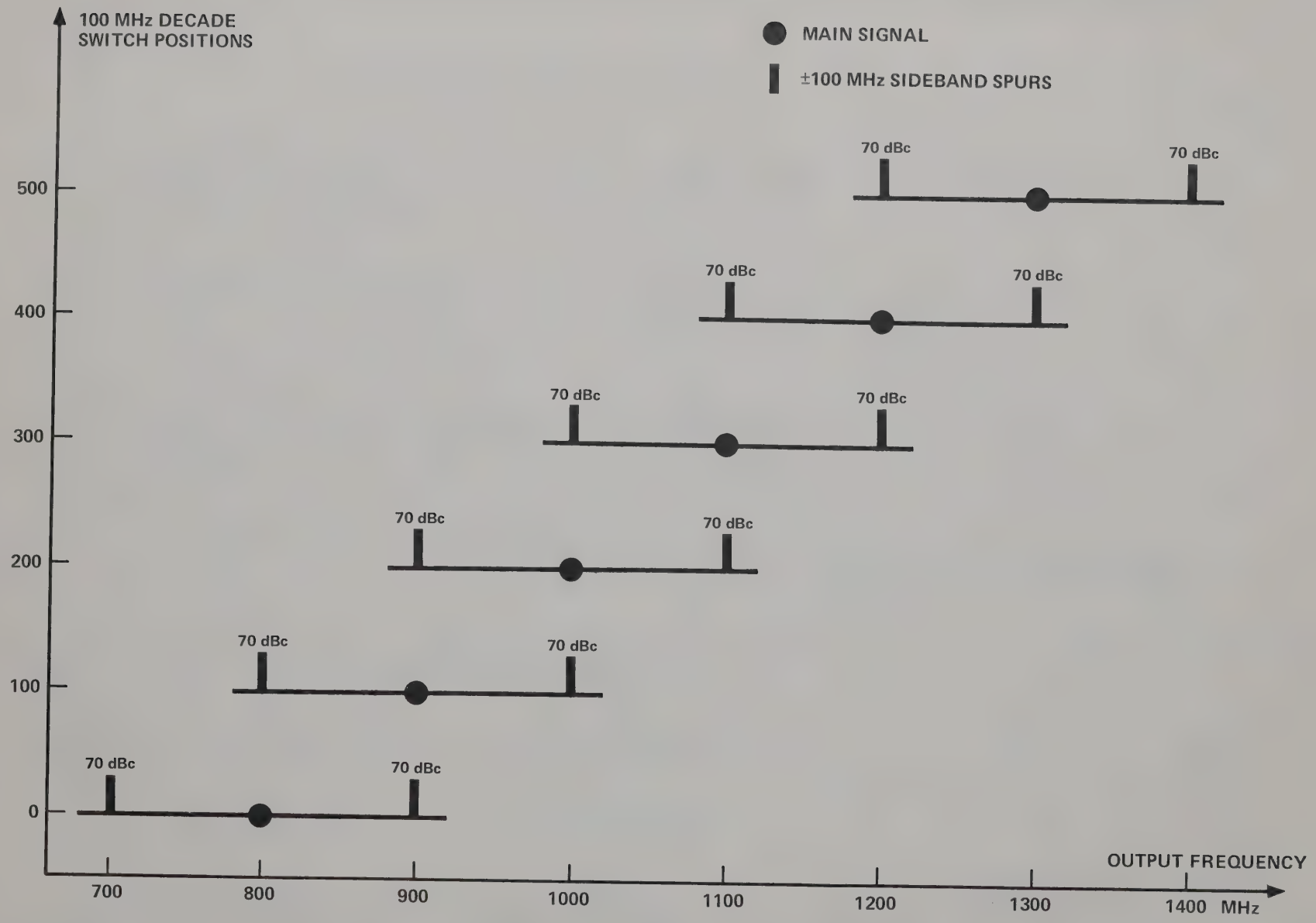

Figure B-7. Output Spectrum at L Port Input Connector of A5Z1 Mixer

If rapid impedance variations are found, remove the A5A10 BBA module and examine the input (3 dB microwave chip attenuator, microwave tubular filter; especially the grounding fingers of this filter) for any unusual appearance. If nothing can be found, exchange A5A10.

Figure B-8 shows the output spectrum of the A4/A5 deck pair due to 100 MHz sideband spurs, the A4A4 → A4A11 leakage spur, and $2 f_R - f_L$ and $3 f_R - 2 f_L$ IM products of the A5Z1 mixer, when the main signal is at 360.0000 MHz. Figure B-9 shows the output spectrum due to the 10 MHz decade spurs when the main signal is at 360.0000 MHz. Figures B-10 and B-11 show the above described spectra with the main signal at 215.0000 MHz.

B.2 A2/A3 DECK PAIR

B.2.1 Summary of Predominant Spurs

a. 1 MHz Decade Spurs

(1) Intermodulation spurs of 1 MHz decade mixers:

Figure B-12 shows the locations of the intermodulation spurs caused by the mixers in the 1 MHz decade PC board: A3A3Z1 and A3A3Z2.

The nomenclature of the spurs in Figure B-12 is as follows:

Spur 1,1: $2 f_{L_1} - 2 f_{X_1}$ spur of mixer A3A3Z1

Spur 1,2: $7 f_{X_1} - f_{L_1}$ spur of mixer A3A3Z1

Spur 2,1: $4 f_{X_2} - f_{L_2}$ spur of mixer A3A3Z2

Spur 2,2: $3 f_{L_2} - 2 f_{X_2}$ spur of mixer A3A3Z2

where:

f_{L_1}: either 60, 61, 62, or 63 MHz depending on 1 MHz dial position (see Figure A-1 for frequency selection code)

f_{X_1}: 21.0 MHz from 100 kHz decade (corresponding to the settings of the 100 kHz, 10 kHz, 1 kHz, and 100 Hz dials at 0)

f_{L_2}: either 120, 122, or 126 MHz depending on the 1 MHz dial position (see Figure A-1 for frequency selection code)

f_{X_2}: either 81.0, 82.0, 83.0, or 84.0 MHz depending on the 1 MHz dial position.

The strongest spur normally is the 2,2 spur since the $2 f_{X_2}$ signal might be caused by a second harmonic of the 80 to 84 Hz amplifier output.

The second strongest spur is the 2,1, the third strongest is the 1,1 spur and the weakest is the 1,2 spur.

Since the input filter of the A4A1 PC board rejects signals ⩽ 197 MHz and ⩾ 213 MHz, only the spurs within the frequency range 197 MHz to 213 MHz frequency range (plus or minus 4 divisions from center on the spectrum analyzer) have to be considered.

All the spurs of the lower decades (100 Hz, 1 kHz, 10 kHz, and 100 kHz decade) are located in a frequency range of −1.5 MHz and +1.5 MHz around the main output signal (due to the 20.0 to 21.0 MHz filter at the output of mixer A3A2U2).

Since all the intermodulation spurs of the 1 MHz decade are an integer number of MHz away from the main signal, only the intermodulation spurs at −1 MHz from the main signal might be confused for a lower decade spur.

(2) Leakage of the 60–63 MHz signal directly into second mixer (A3A3Z2), bypassing the 80–84 MHz bandpass filter, mixing with the L.O. frequency (120–126 MHz) of the second mixer, and producing an output spur between 180 MHz and 189 MHz.

(3) Leakage of 6th harmonic of the 12.0 to 12.6 MHz which is produced along with the desired 10th harmonic in the x10 multiplier. This undesired 6th harmonic (72–75.6 MHz) then leaks into the 80–84 MHz output amplifier and appears as an X-port signal on A3A3Z2, to be mixed with the 120–126 MHz LO frequency, producing an output spur between 192.0 and 201.6 MHz.

(4) ±1 MHz spurs on x10 multiplier output (120–126 MHz) with 1 MHz dial in "8" position, or the "1" position.

(5) Spurs caused by leakage of unused fixed frequency input signals or by spurs accompanying the selected fixed frequency signals:

The spurious signals of the 12.0, 12.2, 12.4, 12.6 MHz input signals are filtered out by the crystal filters Y1 through Y7. Make sure that the two bypass capacitors between test points 1 and 2 and between 3 and 4, which are installed for the 1 MHz filter alignment, have been removed. This should eliminate all fixed frequency input spurs.

Figure B-13 shows the 1 MHz Decade Output Spectrum showing the possible spurs due to unused signal leakage, or due to spurs on the four fixed frequency input signals 12.0, 12.2, 12.4, and 12.6 MHz.

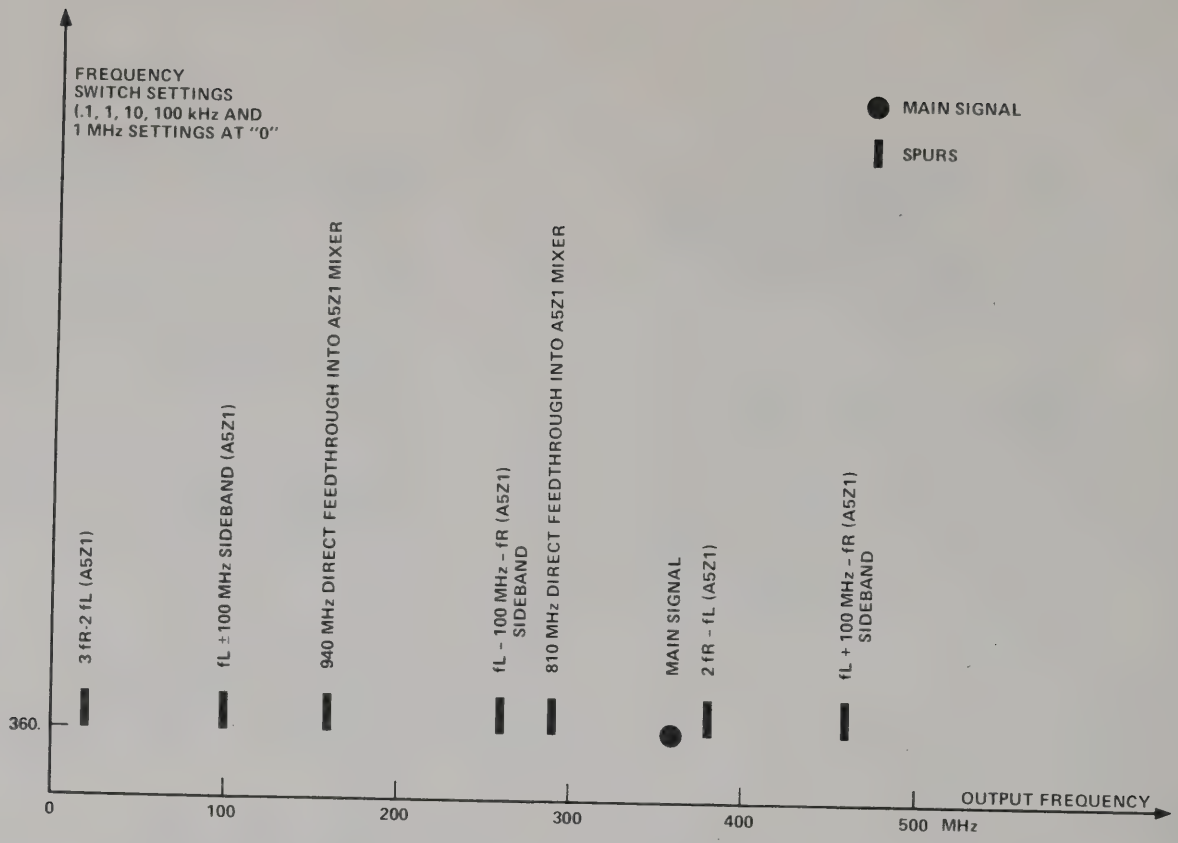

Figure B-8. A4/A5 Deck Pair Output Spectrum Due to 100 MHz DecadeSpurs and Direct Feedthrough Signals for 360.0000 MHz Signal Frequency

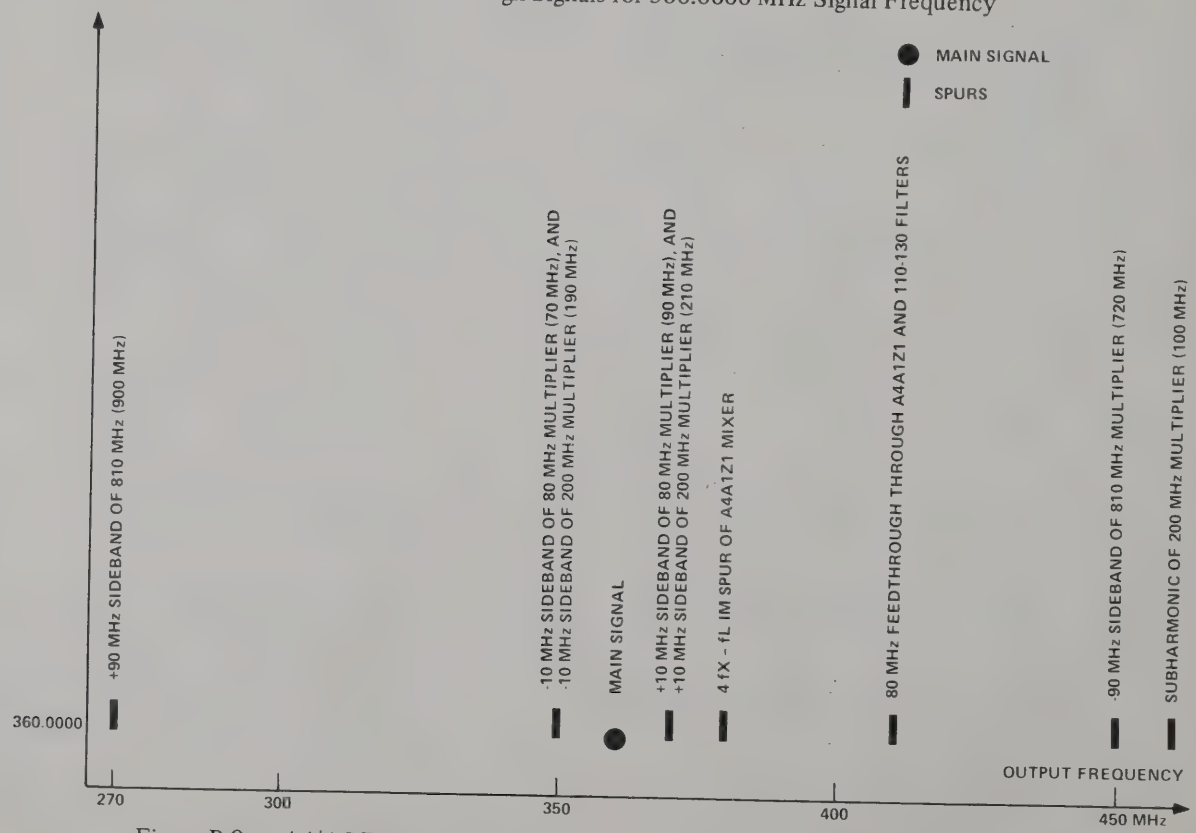
MAIN SIGNAL
SPURS
+90 MHz SIDEBAND OF 810 MHz (900 MHz)
-10 MHz SIDEBAND OF 80 MHz MULTIPLIER (70 MHz), AND
-10 MHz SIDEBAND OF 200 MHz MULTIPLIER (190 MHz)
MAIN SIGNAL
+10 MHz SIDEBAND OF 80 MHz MULTIPLIER (90 MHz), AND
+10 MHz SIDEBAND OF 200 MHz MULTIPLIER (210 MHz)
4 fX - fL IM SPUR OF A4A1Z1 MIXER
80 MHz FEEDTHROUGH THROUGH A4A1Z1 AND 110-130 FILTERS
-90 MHz SIDEBAND OF 810 MHz MULTIPLIER (720 MHz)
SUBHARMONIC OF 200 MHz MULTIPLIER (100 MHz)
360.0000
270
300
350
400
450 MHz
OUTPUT FREQUENCY

Figure B-9. A4/A5 Deck Pair Output Spectrum Due to Predominant 10 MHz Decade Spurs with Frequency Dials Set to 360.0000 MHz

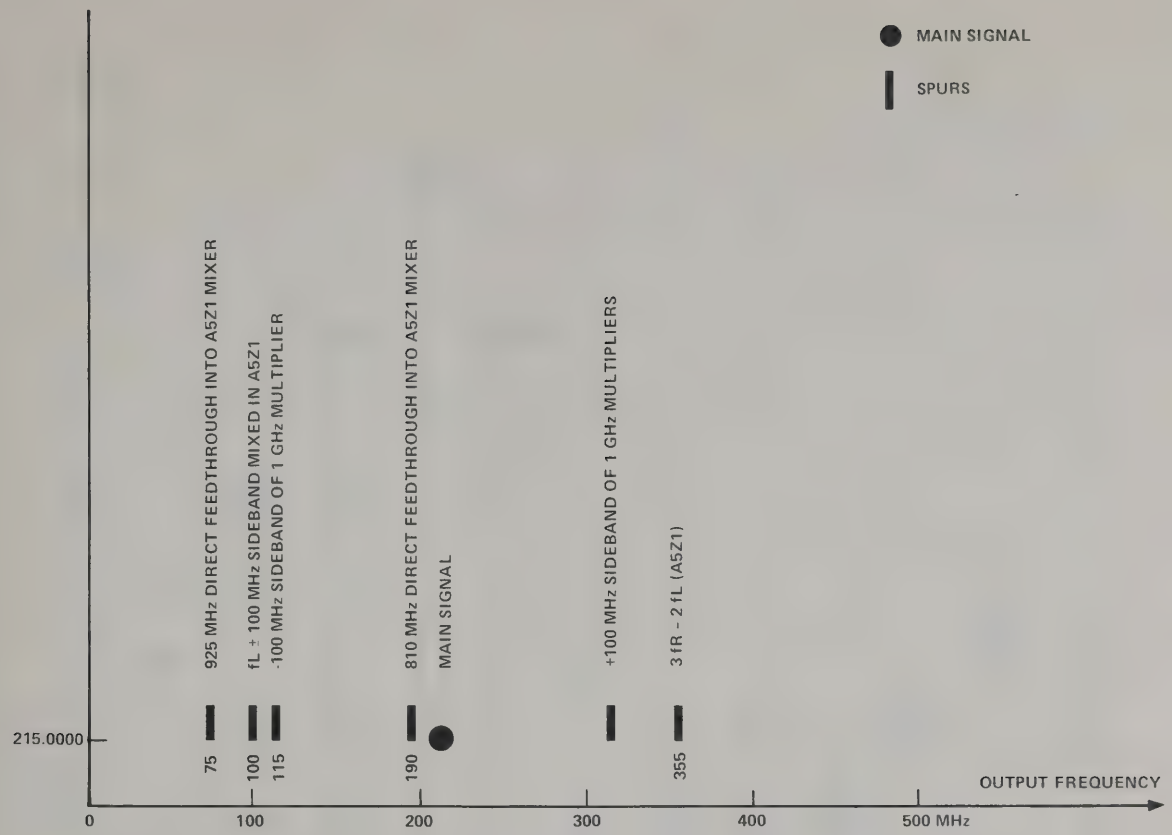

Figure B-10. A4/A5 Deck Pair Output Spectrum Due to 100 MHz Decade Spurs and Direct Feedthrough Signals for 215.0000 MHz Main Signal Frequency

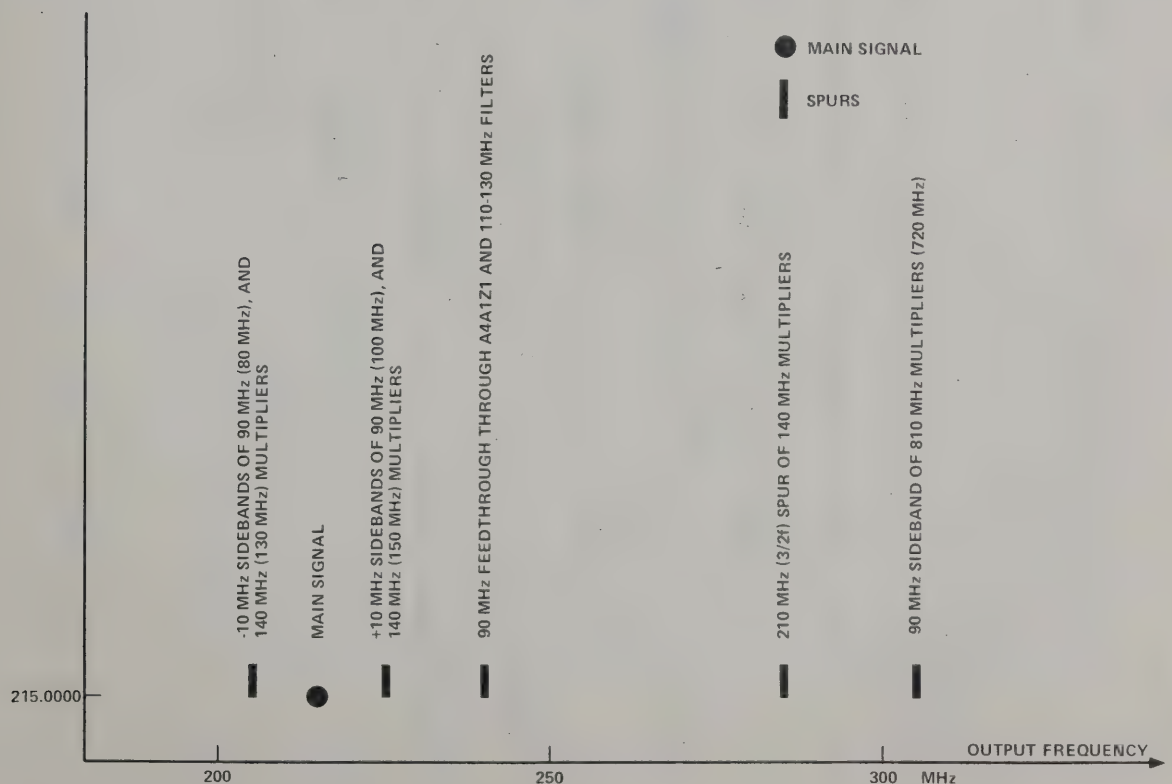
MAIN SIGNAL
SPURS
-10 MHz SIDEBANDS OF 90 MHz (80 MHz), AND
140 MHz (130 MHz) MULTIPLIERS
MAIN SIGNAL
+10 MHz SIDEBANDS OF 90 MHz (100 MHz), AND
140 MHz (150 MHz) MULTIPLIERS
90 MHz FEEDTHROUGH THROUGH A4A1Z1 AND 110-130 MHz FILTERS
210 MHz (3/2f) SPUR OF 140 MHz MULTIPLIERS
90 MHz SIDEBAND OF 810 MHz MULTIPLIERS (720 MHz)
215.0000
OUTPUT FREQUENCY
200
250
300
MHz

Figure B-11. A4/A5 Deck Pair Output Spectrum Due to Predominant 10 MHz Decade Spurs, with the Frequency Dials Set to 215.0000 MHz

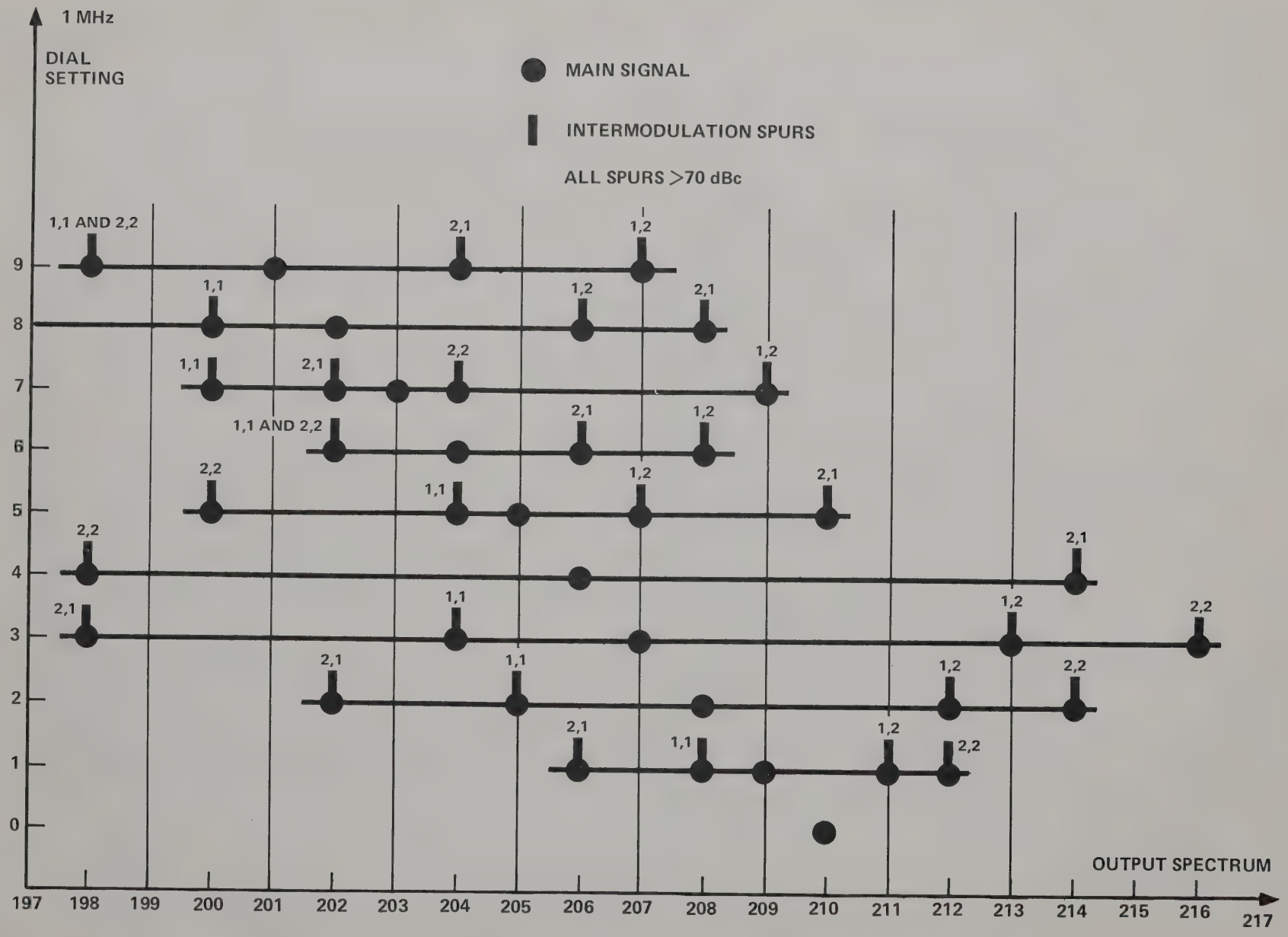

Figure B-12. 1 MHz Decade Output Spectrum Due to Intermodulation Spurs

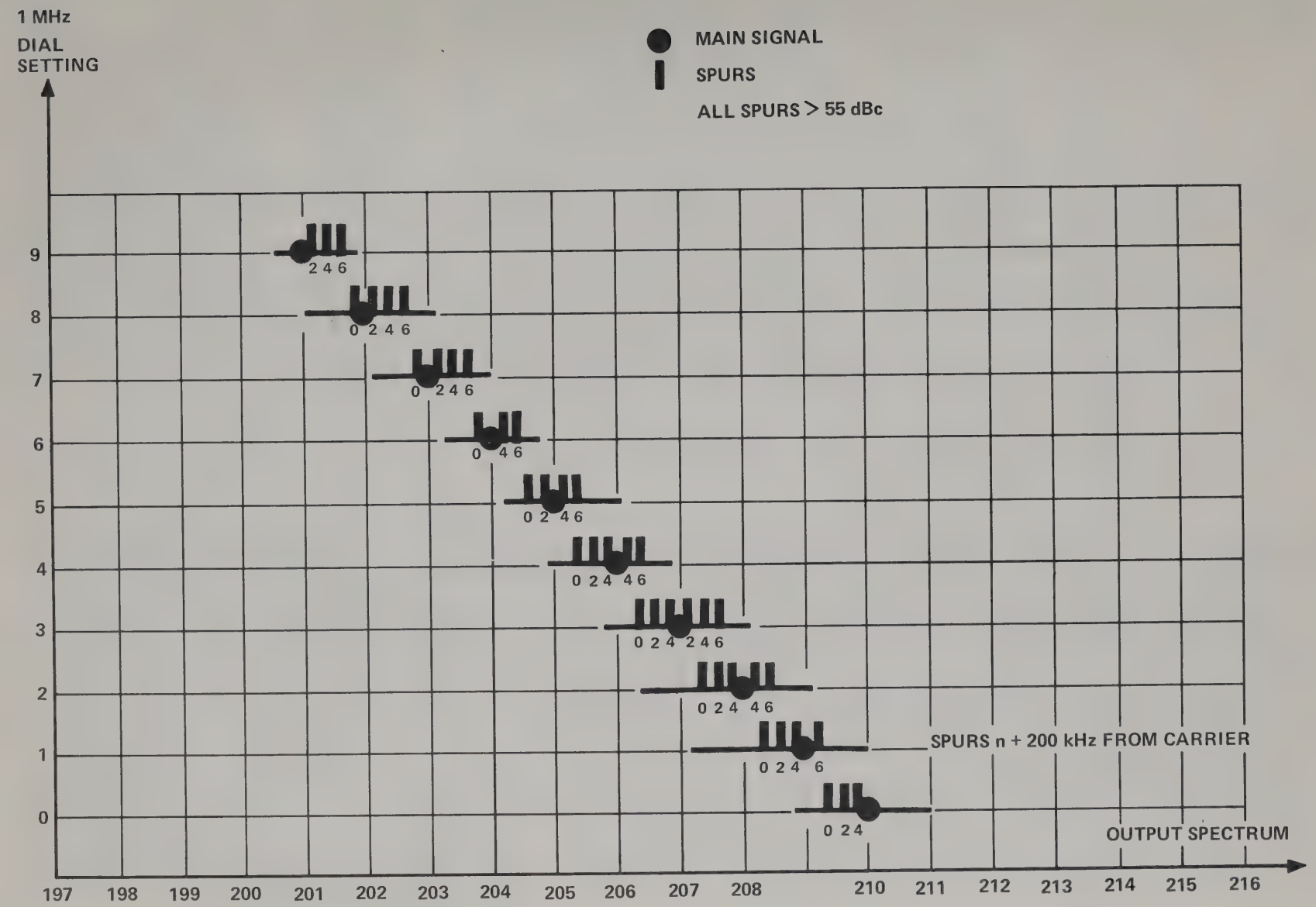

Figure B-13. 1 MHz Decade Output Spectrum Due to Fixed Frequency Signal Spurs or Leakage Spurs

These spurs are always an integer of 200 kHz from the main signal: 200, 400, or 600 kHz. Since the furthest away spur cannot be more than 600 kHz from the main signal, they are easily distinguishable from the intermodulation spurs (they are always an integer of 1 MHz away from the main signal).

To check the 200–210 MHz output signal for these spurs, set all decades to 0 (output signal frequency 210.0 MHz). Set the spectrum analyzer center frequency to 210.0 MHz, and the scanwidth to 200 kHz per division. The spurs should be within ±3 major divisions of the main signal, and should be always located on a major division of the scope graticule.

Most probably, not all the leakage spurs will appear. The spurs in Figure B-12 are therefore marked "0", "2", "4", and "6", which indicates either 12.0, 12.2, 12.4, or 12.6 MHz spurs. If, for instance, only the "0" spur appears at the "0" dial setting of the 1 MHz decade (a spur 600 kHz to the left of the main signal), switch through all the 1 MHz dials and observe whether the spur appears at the proper frequency according to Figure B-13, and according to the frequency selection code (Figure A-1). For instance, in the "0" dial position, the 12.0 signal leaks into the main 12.6 signal. This spur will remain 0.6 MHz from the main signal through the X5 multiplier and will appear as a spur at 62.4 MHz, 600 kHz away. This spur will only appear when the 1 MHz dial is in the 0 and 4 position. Therefore, if this 600 kHz away spur appears only in the 0 and 4 position of the 1 MHz dial, it is clearly a 1 MHz decade spur.

b. 100 kHz Decade Spurs

Since the 20–21 MHz bandpass filter of the 100 kHz decade rejects all signals $\leqslant$ 19.7 MHz and $\geqslant$ 21.3 MHz, only the spurs within the 19.7 MHz to 21.2 MHz frequency range have to be considered.

To check for 100 kHz decade spurs, leave the spectrum analyzer connected to the 200–210 MHz output. Set the 1 MHz decade dial to 0, and the spectrum analyzer center frequency to 210.0 MHz, the scan width to 200 kHz/Div., bandwidth to 30 kHz, and gain to –30 dBm full scale.

(1) Intermodulation Spurs of 100 kHz Decade:

Figure B-15 shows the locations of the intermodulation spurs caused by the mixers in the 100 kHz decade PC board: A3A2U1 and A3A2U2. This figure is very similar to Figure B-12 since all frequencies in the 100 kHz decade are equal to 1/10 of the frequencies of the 1 MHz decade. The spur characteristics also are identical:

Spur 1.1: $2\,f_{L_1} - 2\,f_{X_1}$
Spur 1.2: $7\,f_X - f_{L_1}$
Spur 2.1: $4\,f_{X_2} - f_{L_2}$
Spur 2.2: $3\,f_{L_2} - 2\,f_{X_2}$

Again the 2.2 spur is the strongest, the 2.1 spur the next strongest, with the 1.1 and the 1.2 spurs the weakest.

(2) Spurs caused by leakage of unused fixed frequency input signals or spurious signals accompanying the selected fixed frequency signals:

The spurious signals accompanying the 12.0, 12.2, and 12.6 MHz input signals are filtered out by the crystal filters Y1, Y2, and Y3. Make sure that the three bypass capacitors between test points 4–5, 6–7, and 8–9, which are installed during the 100 kHz filter alignment, have been removed.

The 6.0, 6.1, 6.2, and 6.3 MHz signals contain no crystal filters and therefore could contain spurs either 200, 400, or 600 kHz away from the main signal, created in the fixed frequency generator. Furthermore, any leakage of turned-off signals in the 100 kHz decade into the turned-on signal (insufficient isolation of diode switches) can create spurs. Figure B-16 shows the 100 kHz Decade Output Spectrum showing the possible spurs due to unused signal leakage, or due to spurs on the four fixed frequency input signals 6.0, 6.1, 6.2, and 6.3 MHz. The spurs due to the leakage of unused signals are always an integer of 100 kHz from the main signal (100 kHz, 200 kHz, or 300 kHz), while – as explained before – the spurs accompanying the output signals from the fixed frequency generator are either 200, 400, or 600 MHz away from the main signal. These leakage spurs have normally higher levels than the intermodulation spurs.

The two low frequency mixers A3A2U1 and A3A2U2 usually have a much higher balance than the two high frequency mixers in the 1 MHz decade A3A2Z1 and A3A3Z2. Therefore, the intermodulation spurs normally are $>$ 75 dBc.

Since it is usually only one leaky signal or one fixed frequency signal with an excessive spur, the origin of the spur is determined by measuring the frequency location (especially the distance from the main signal) and the level of the spur as a function of 100 kHz dial setting. For instance, if the 6.0 MHz fixed frequency input signal contains a spur at 6.2 MHz, a spur 200 kHz higher than the main signal appears in the output spectrum with the 100 kHz decade dial at the "3", "7", and "9" dial positions.

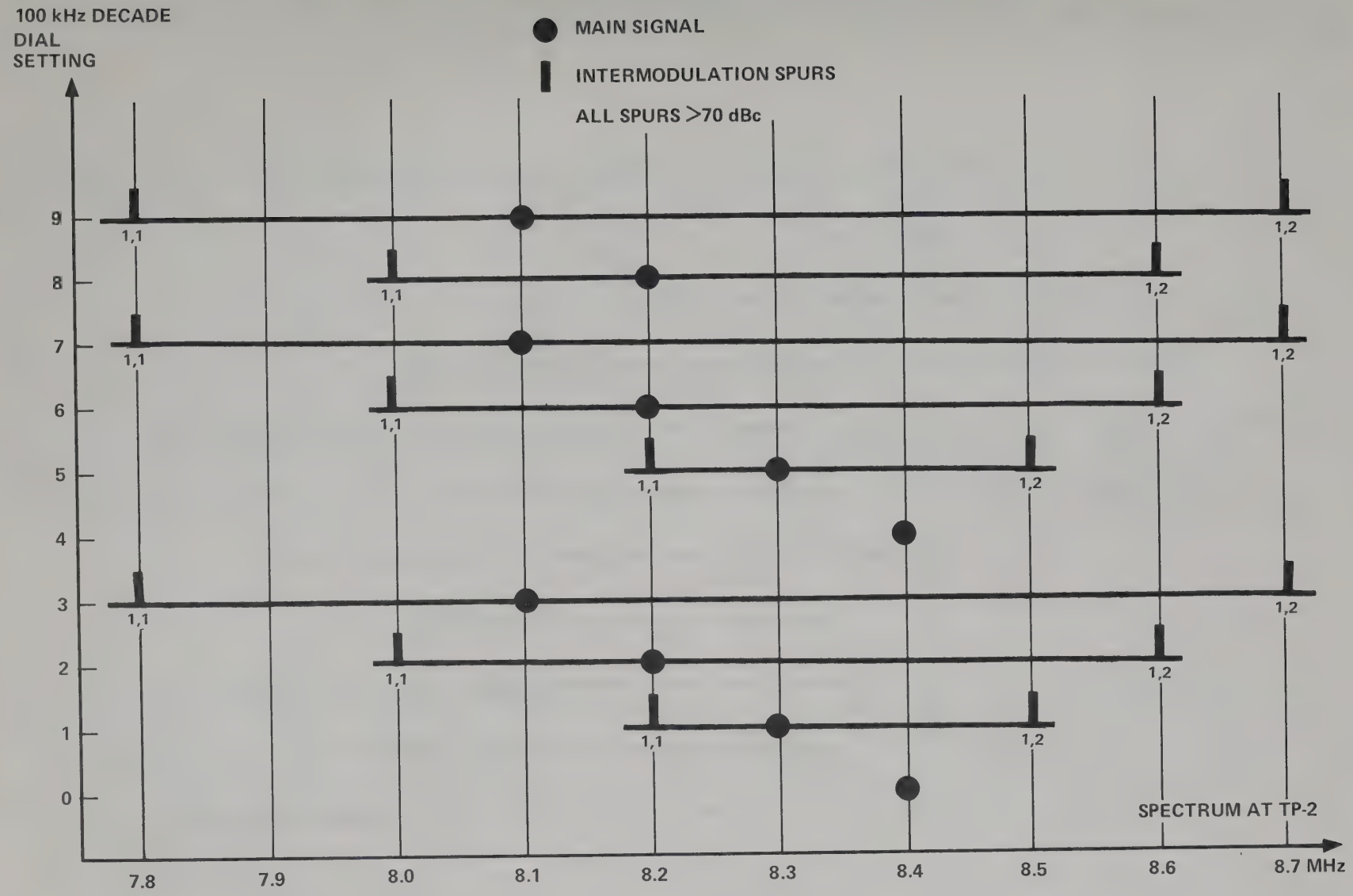

Figure B-14. Spectrum at TP-2 of 100 kHz Decade as Function of 100 kHz Dial Setting (100 Hz, 1 kHz, 10 kHz dials all at zero)

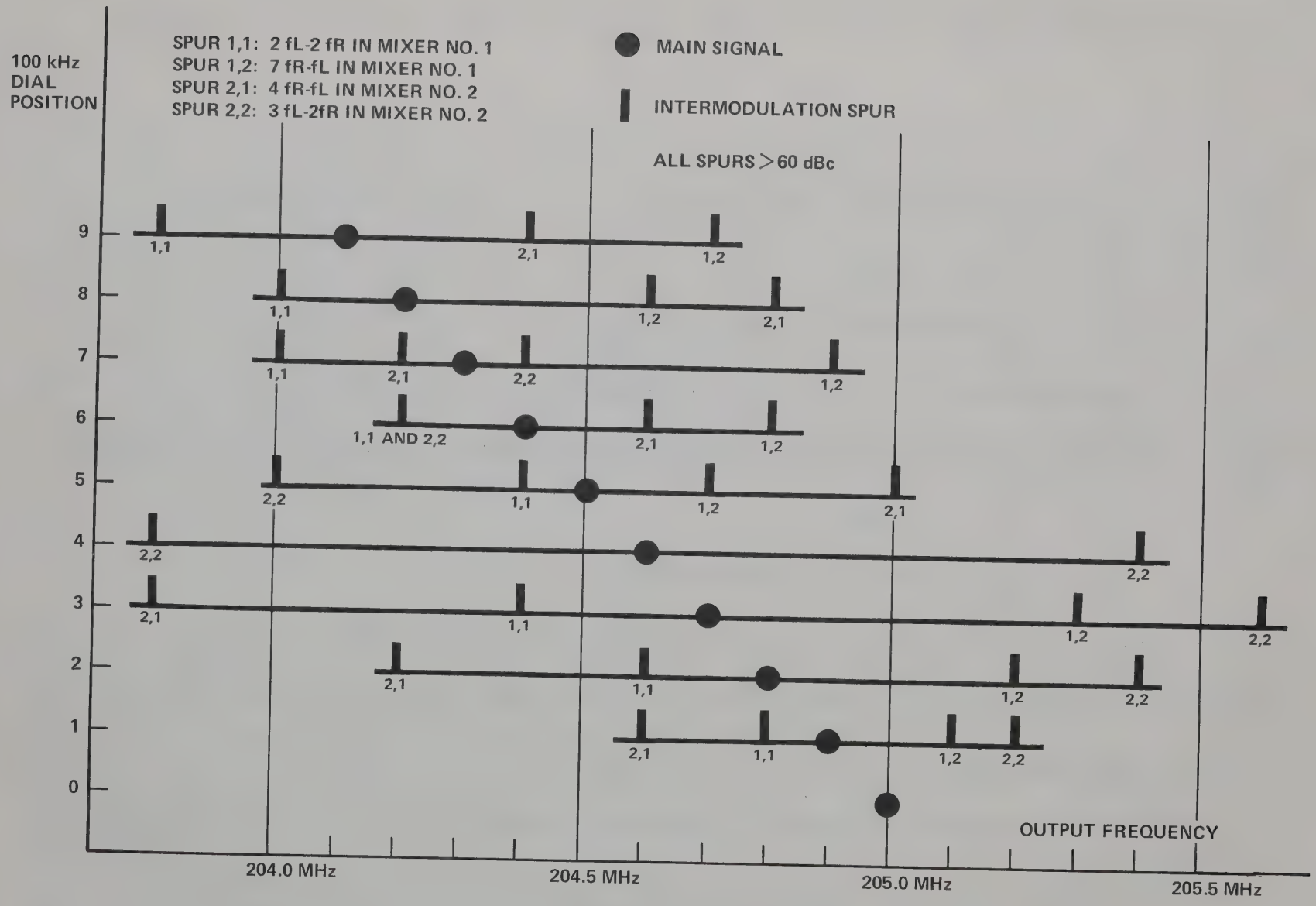

Figure B-15. Output Spectrum at A2/A3 Deck Output A3J4 Due to Intermodulation Products of the Two Mixers in the 100 kHz Decade as a Function of the 100 kHz Frequency Dial Position (with 1 MHz frequency dial set to 5)

B.2.2 Procedure for Reduction of Predominant Spurs

a. 1 MHz Decade Spurs (Refer to Paragraph B.2.1a.)

(1) Intermodulation spurs:

$3 f_{L2} - 2 f_{X2}$ (2,2) and $4 f_{X2} - f_{L2}$ (2,1) spurs.

Remove A3A3Z2 mixer and connect the spectrum analyzer through a mixer header to BNC adapter (see Figure 7-10) to the X-port input (pin 2 or pin 7).

Set all dials to "0". The signal frequency should be 84.0 MHz, and the signal level −20 dBm. Check the second and fourth harmonic of the signal. Both should be ⩾ 70 dBc. If not, check the tuning of the output filter of A3A3Q17. (Adjust C134 for maximum output of the 84 MHz signal.) If the harmonics are ⩾ 70 dBc, then the spurs are not caused by harmonics but are IM products of the A3A3Z2 mixer; check the input level. It should be ⩽ −20 dBm. If not, adjust A3A3R90. Replace the adapter with another adapter which connects to the L-port input of the A3A3Z2 mixer (pin 5). The frequency should be 126.0 MHz and the level +7 dBm. If the level is not correct, adjust A3A3R62. Connect the spectrum analyzer to the 200–210 MHz output and reinsert the mixer.

The 2,1 and 2,2 spurs should now be > 60 dBc. If not, try another A3A3Z2 mixer. If the highest spur is at 58 dBc, decrease the output level (−30 dBm) by 3 dB by decreasing the X-port input level by adjusting A3A3R90. The spur level should decrease by 3 dB, so that the spur is then at 61 dBc.

$2 f_{L1} - 2 f_{X1}$ (1,1) and $7 f_{X1} - f_{L1}$ (1,2) spurs

These spurs are caused either by mixer #1 or by a second harmonic of the 20–21 MHz amplifier Q16. These spurs are normally ⩾ 70 dBc, and no adjustment is necessary. However, if the spurs appear, the reduction procedure is very similar to the mixer #2 spur reduction procedure. Remove the A3A3Z1 mixer and connect the spectrum analyzer through an adapter to the X-port input (pin 2 or pin 7). Leave all dials set to "0". The signal frequency should be 21.0 MHz and the level −10 dBm. Check the second and seventh harmonic of the 21.0 MHz signal. It should be ⩾ 70 dBc. If the level is not accurate, tune L22 of the 100 kHz decade for maximum output, and adjust the 20–21 MHz output level of the 100 kHz decade (A3A2R54). Remove the adapter and reinsert the mixer. If either of the two spurs is only about 58 dBc, decrease the 200–210 MHz output level by 2 dB by decreasing the 20–21 MHz level (A3A2R54), and then increasing the output level again by adjusting the 80–84 MHz level (A3A3R90). The spur should be reduced by 2 dBc.

(2) spurs – This leakage spur is outside of the 200–210 MHz tuned amplifier bandpass. The signal-to-spur ratio at the A3 deck output therefore can be much smaller than the required 50 dB for the total CSM-1. The higher spur frequency occurs with the CSM-1 dials at xx0.00xx (189.0 MHz), where the minimum signal-to-spur ratio at the A3 deck output is specified at 32.0 dBc. This ratio decreases to 24.0 dBc with the CSM-1 dials set to xx9.99xx, since the spur frequency at this setting is 180.00 MHz. The spur level is affected strongly by shielding and covers. If all shields and covers are checked (soldering, grounding, etc.) and found O.K., and the spur level is still excessive, there is a simple way to reduce this spur:

Lower the L.O. level into mixer A3A3Z1. Since the signal to spur ratio at the A3 deck output decreases about 1 dB for each 1 MHz dial increase of 1 MHz, the output filter of the 60–63 MHz multiplier is tuned for maximum at 60 MHz ("9" on the 1 MHz dial), and 5 dB lower at 63 MHz ("0" on the 1 MHz dial). This is done by adjusting L66. Make sure the L.O. level at 63 MHz is ⩾ 0 dBm. This avoids excessive IM product levels of A3A3Z1.

If the L.O. level reduction is not sufficient, increase the input level into the A3A3 module (from the A3A2 module). The nominal input level at the X-port of mixer 1 in the A3A3 module is −20 dBm. Since this leakage spur is independent of the input signal level, an increase in signal level of 1 dB increases the signal to spur ratio by 1 dB. If the spur level is excessive, increase the input level by adjusting A3A2R54 (maximum allowed level −16 dBm), and reduce the input level into the X-port of A3A3Z2 by adjusting A3A3R62 to the original level.

(3) spur – This leakage spur occurs at the class C multiplier Q12 since this stage produces a comb whose spectral distribution is centered around the desired 10th harmonic (120–126 MHz). It is actually a x5 multiplier, since the 12.0–12.6 MHz signal has been doubled in U1. Since this signal leaks into the output stage of the 80–84 MHz amplifier (Q17), its level is not affected by the adjustment of A3A3R90. The signal to spur ratio therefore can be increased by increasing the 80–84 MHz level into the Z2 mixer. Great care has to be exercised, since an excessive 80–84 MHz level produces the 2,2, and 2,1 IM spurs described under (1).

If the spur level is still excessive, it can be further reduced by reducing the drive level on Q12 by detuning L20, L21, and L22, and adjusting C86. These adjustments also can cause the 120–126 MHz level to drop, hence the L.O. level must be carefully monitored while reducing this leakage spur. The spur is in-band when the 1 MHz dial is set to either 0, 1, 2, or 3. Any adjustment should be made with the 1 MHz dial in one of these positions. An effective indirect way of making sure that the IM products do not increase excessively is to watch the level of the 2,2 spur while the leakage spur is being reduced.

(4) spur – This spur is caused by the mixing product $5\ f_2 - 3\ f_1$ in the mixer A3A3U1 which operates as frequency doubler for the x10 multiplier, where:

f_1 = input frequency for x10 multiplier,

f_2 = input frequency for x5 multiplier.

The signal from the x5 multiplier is coupled inadvertantly into the input of U1 from the output of the x5 multiplier (the signal frequency is 5 x f_2) and mixes with the 3rd harmonic of f_1 as: $f_R - 3\ f_{LO}$. The output frequency falls within the 24–25.2 MHz filter passband at the output of U1 when the 1 MHz dial is either in the "1" or the "8" position:

1 MHz dial "1": f_1 = 12.6 MHz;
f_2 = 12.4 MHz,
5 x 12.4 – 3 x 12.6 = 24.2 MHz.

1 MHz dial "8": f_1 = 12.0 MHz;
f_2 = 12.2 MHz,
5 x 12.2 – 3 x 12.0 = 25.0 MHz.

(The spur falls into this passband also in the "0", "6", and "9" position, but at these settings the spur frequency and the main frequency are identical and no spur is developed).

To reduce this spur, check the proper installation of the shield over the x5 multiplier compartment, and the proper soldering of the A3A3 cover to the A3A3 partitions. If necessary, solder the cover to more partitions, especially around the x5 multiplier, and the input section of the A3A3U1 doubler.

(5) Leakage spurs:

Make sure that the 1 MHz decade cover, and the fixed frequency generator cover are properly inserted. Check the appropriate diode switch in the 1 MHz decade, where the signal leaks through by checking the DC level on the diodes. If necessary, replace the diode(s). If the leakage spurs do not disappear, check the crystal filters; if necessary, replace the suspect crystal filter.

Figure B-13 shows the locations of spurs due to the leakage of unused input frequencies inside the A3A3 1 MHz decade module.

b. 100 kHz Decade Spurs (Refer to Paragraph B.2.1b.)

(1) Intermodulation spurs:

$2\ f_{L_1} - 2\ f_{X_1}$ (1,1) and $7\ f_{X_1} - f_{L_1}$ (1,2) spurs

Remove the cover from the 100 kHz decade PC board and connect the spectrum analyzer input (50 Ω) to test point #2 (center frequency 8.2 MHz, scan width 50 kHz/Div.).

Verify that the spur exists. Figure B-14 shows the spectrum at TP-2. If the spur exceeds 60 dBc at a certain 100 kHz dial setting, check the levels at the low level input (pin 11) and the high level input (pin 5) of A3A2U1. If the levels are within specifications, change the jumper W1 from either 1 and 3 to 2 and 3 or vice versa. If the spur is still $<$ 60 dBc and if it is the 1,1 spur, check the harmonic of the 2.1 MHz input signal at pin 11 of A3A2U1 ($2\ f_{X_1}$). The harmonic should be at least 70 dB below the 2.1 MHz signal. If the spur is still $<$ 60 dBc, change the mixer A3A2U1.

$3\ f_{L_2} - 2\ f_{X_2}$ (2,2) and $4\ f_{R_2} - f_{L_2}$ (2,1) spurs

If the excessive spur is the 2,2 spur, leave the Spectrum Analyzer at TP-2 and check the harmonic content of the 8.0 to 8.4 MHz signal. The second harmonic level should be $>$ 70 dBc. If the harmonic level is $>$ 70 dBc, check the low level input (pin 11) of the second mixer A3A2U2. Connect the spectrum analyzer to the 200–210 MHz output connector. If the level is 30 mV p-p ±3 mV and the spur still exists, check the levels at the high level input with the 100 kHz dial in the "0", "4", and "8" position. The level should be 300 mV p-p + 100 mV, –0 mV. If this level in all three 100 kHz dial positions is O.K. and the spur still exists, move the jumper W2 to the unused position. If the spur still has not decreased to $>$ 60 dBc, change the second mixer A3A2U2.

Figure B-15 shows the output spectrum at the A2/A3 deck output (A3J4) due to IM products of the two mixers in the 100 kHz Decade Module as a function of the 100 kHz frequency dial position, with the 1 MHz dial set to "5".

(2) spurs – The spurs due to the leakage of unused frequencies in the 100 kHz decade are usually caused by improperly operating

diode switches. Check the appropriate diode switch in the 100 kHz decade, where the signal leaks through by checking the dc levels around each of the three diodes comprising one switch. If necessary, replace the diode(s). If the leakage spurs do not disappear, check the crystal filters. If the filters are O.K., check the proper installation of the cover.

Figure B-16 shows the output spectrum of the A2/A3 deck pair at A3J4 connector due to leakage of the unused frequencies (or spurs on the fixed input frequencies) in the 100 kHz decade with the 1 MHz decade dial set to "0".

B.2.3 100 Hz, 1 kHz, 10 kHz Decade Spurs

Since the output frequency of the 10 kHz decade is divided by 10, of the 1 kHz decade by 100 and of the 100 Hz decade by 1000, all intermodulation spurs, fixed frequency generator spurs, and leakage spurs created in these three decades should be $>$ 70 dBc. The reduction in the spur level by a 10:1 frequency division is nominally 20 dB, by a 100:1 division 40 dB, and by a 1000:1 division 60 dB. If therefore, spur levels $>$ 70 dBc exist, they can easily be detected by connecting the spectrum analyzer through a high impedance FET probe to the input of the 10:1 divider (U3, pin 6). At this point, any spur should be below 50 dBc. Figure B-17 shows the output spectrum of the 100 Hz, 1 kHz, or 10 kHz Decade with the input signal at 2.1 MHz (lower decade dial settings at "0").

Therefore, the spur levels in the decades before the dividers have to be so high in order to cause excessive output signal spurs, that they can be caused only by a component failure (Diode switch, mixer, amplifier, etc.).

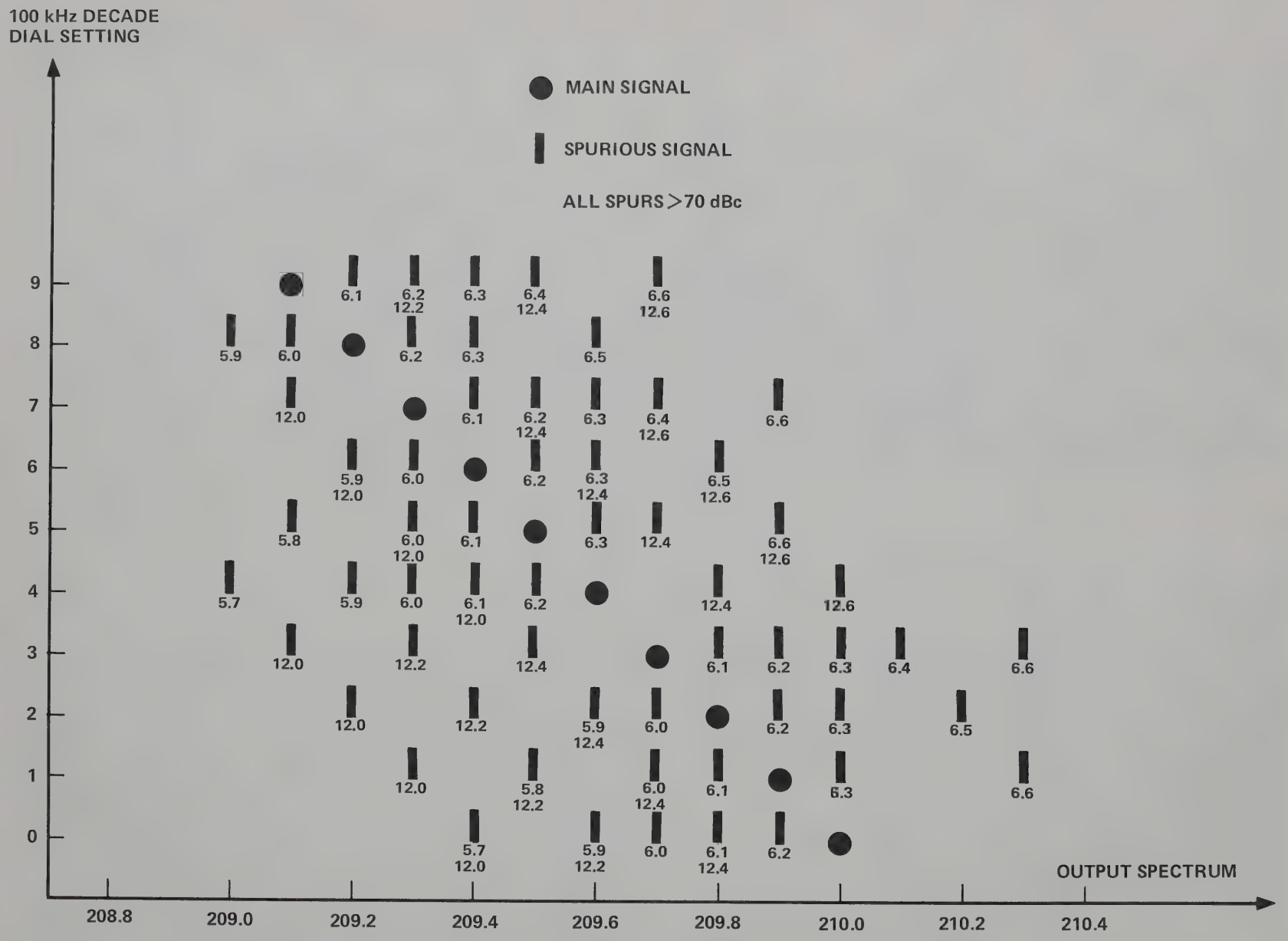

Figure B-16. Output Spectrum of A2/A3 Deck Pair at A3J4 Connector, Due to Fixed Frequency Signal Spurs or Leakage Spurs in 100 kHz Decade, as a Function of 100 MHz Dial Setting with the 1 MHz Dial set to "0"

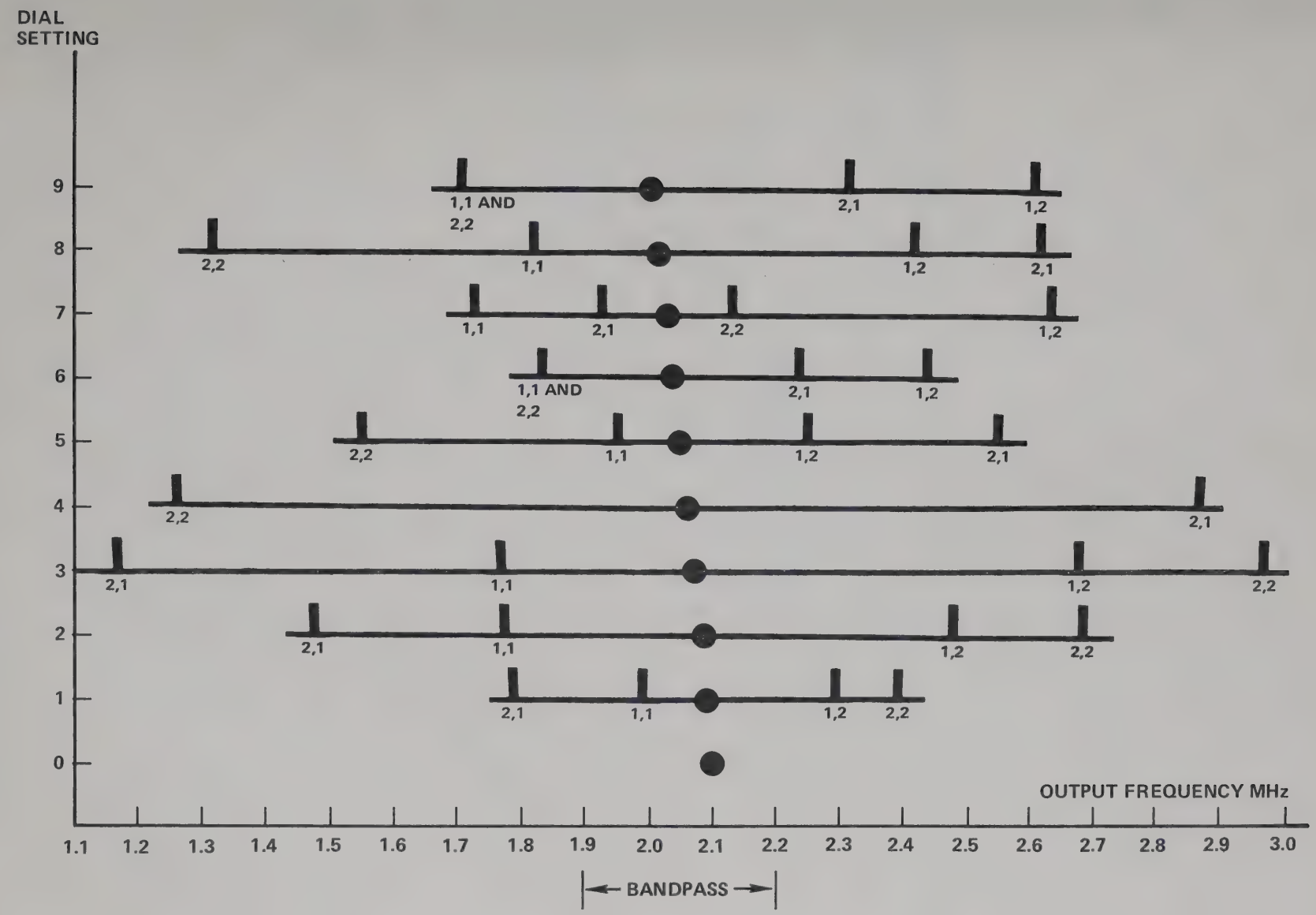

Figure B-17. 100 Hz, 1 kHz, 10 kHz Decade Output Spectrum with Input Frequency at 2.1 MHz

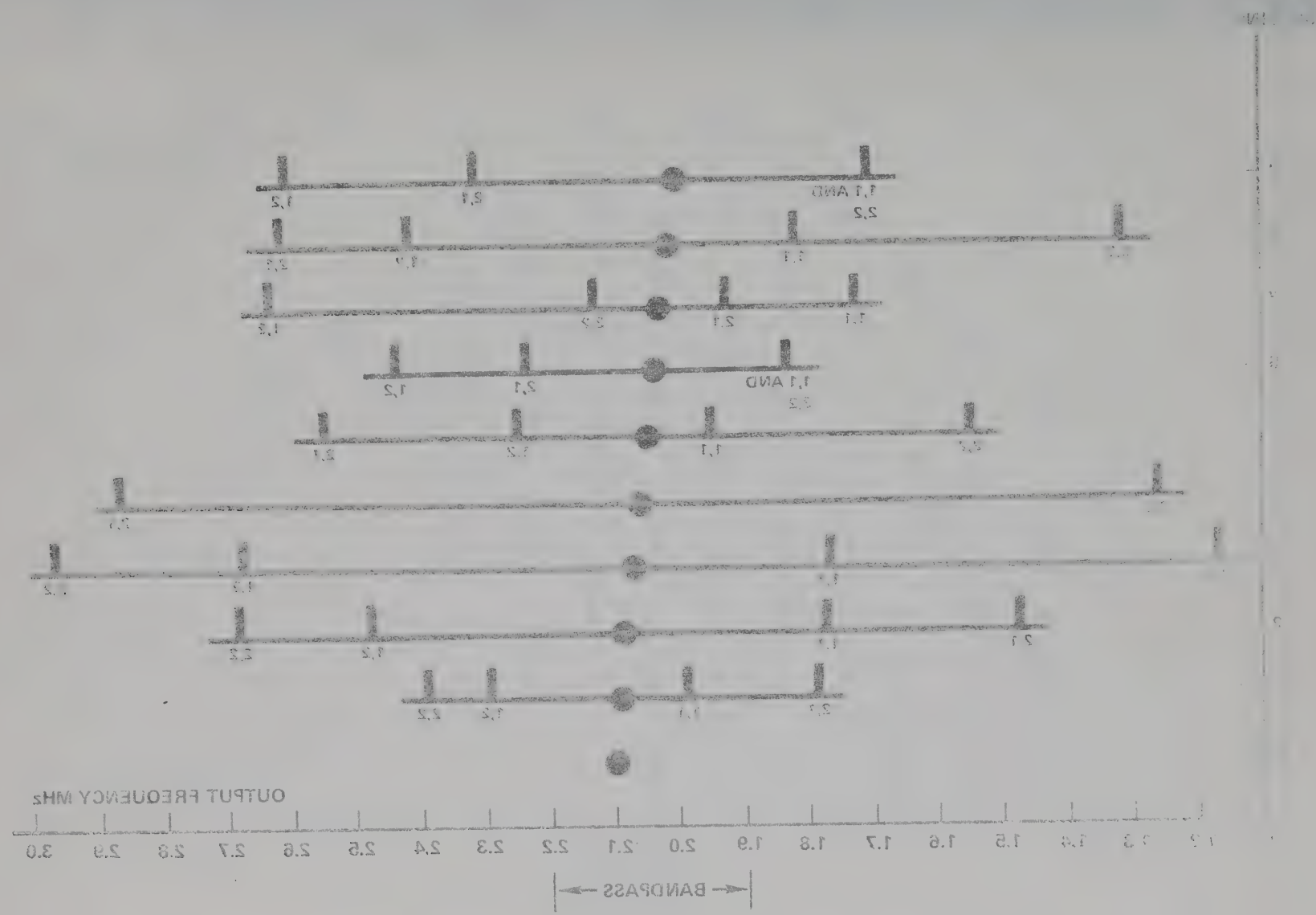

Figure B-[illegible] 100 Hz, 1 KHz, 10 KHz Decade Output Spectrum with Input Frequency at 2.1 MHz

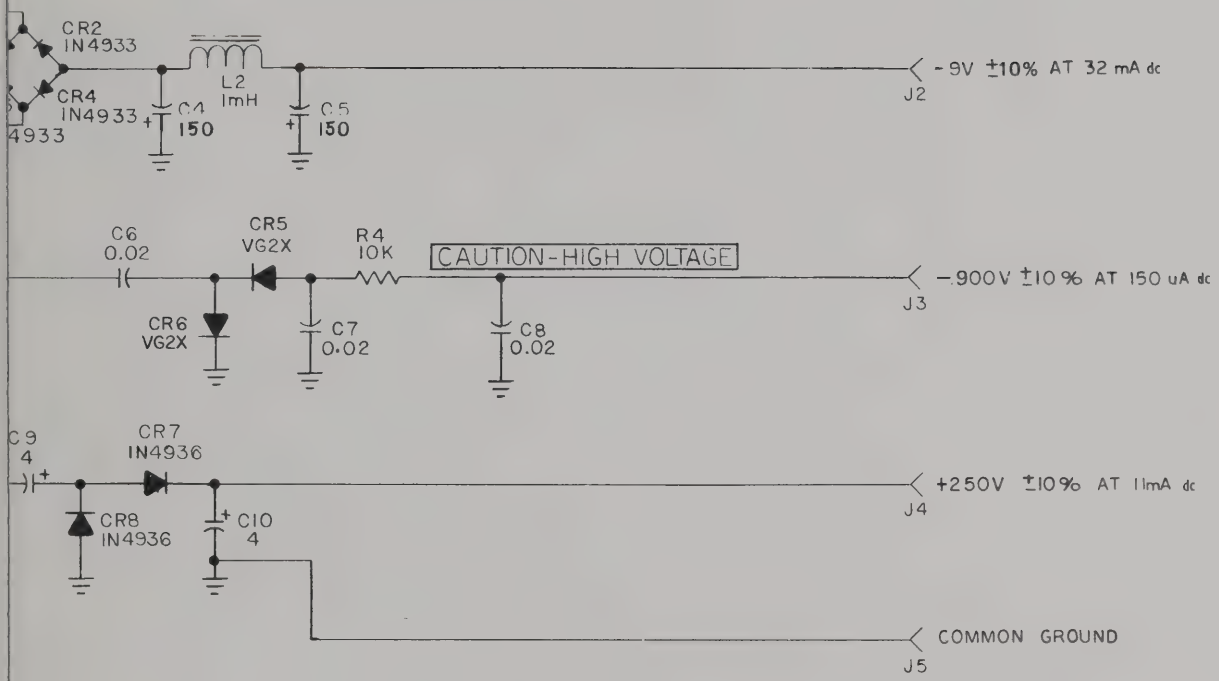

Figure 9-33. Schematic Diagram
High Voltage Power Supply. A8
Dwg No. 4-501527-001 (A)

BANDPASS
OUTPUT FREQUENCY MHz

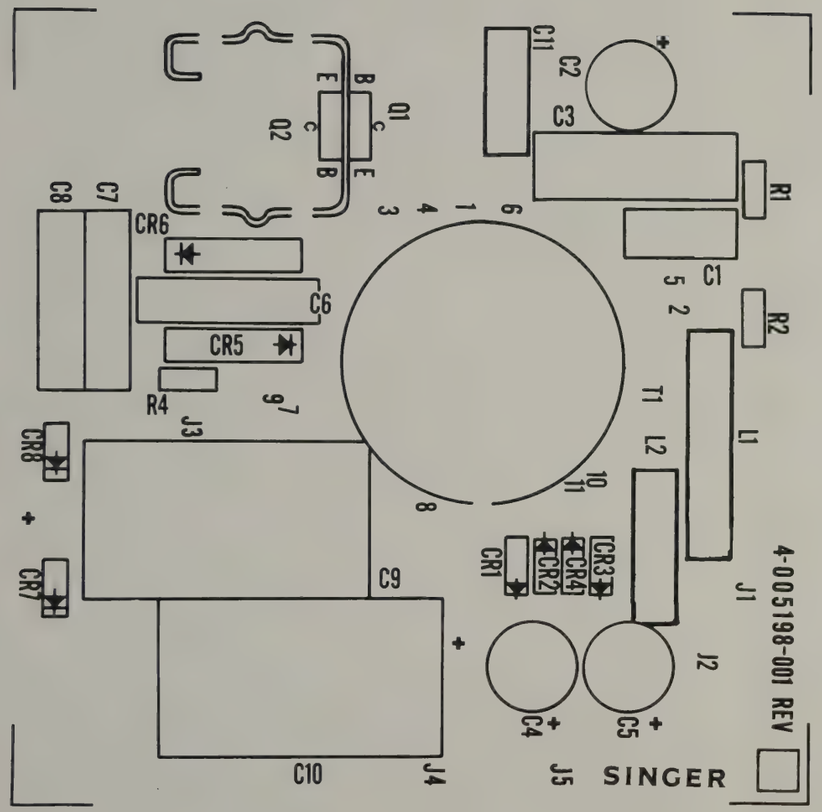

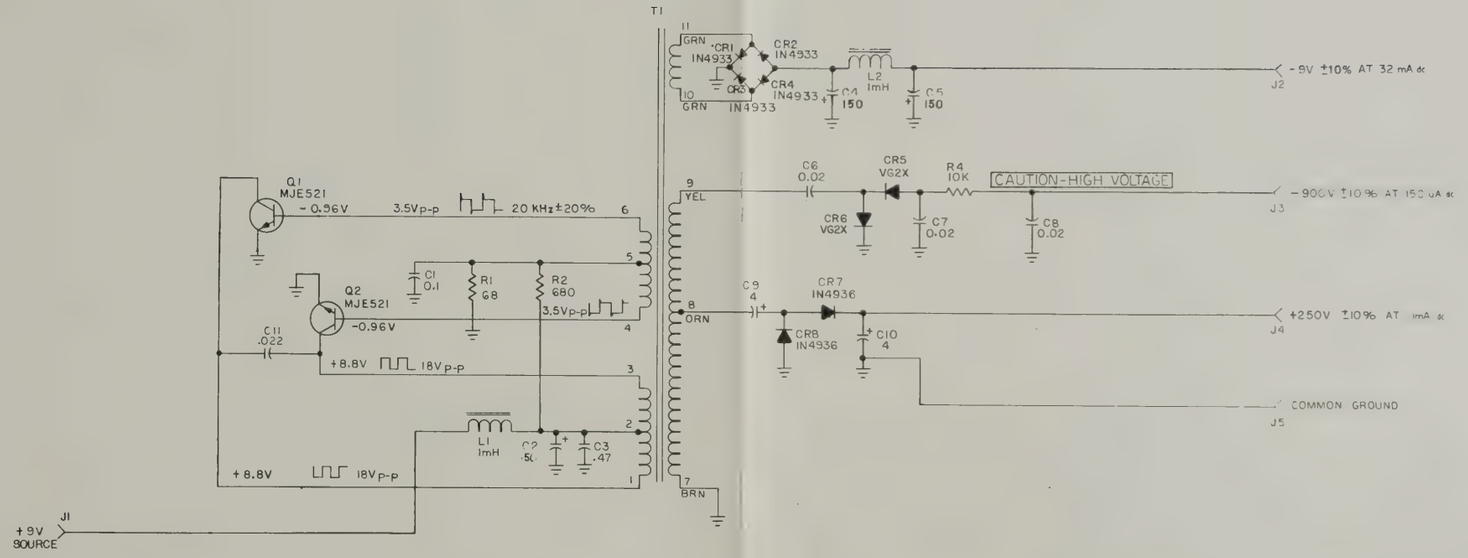

NOTES: UNLESS OTHERWISE SPECIFIED

1. PARTIAL REFERENCE DESIGNATORS ARE SHOWN. FOR COMPLETE DESIGNATION PREFIX WITH ASSY REF DES A8. EXAMPLE: R1 IS A8R1.
2. ALL RESISTORS ARE IN OHMS, 1/4 W, ±10%.
3. ALL CAPACITORS ARE IN MICROFARADS.
4. VOLTAGES SHOWN WITHOUT TOLERANCES ARE TYPICAL.

Figure 9-33. Schematic Diagram
High Voltage Power Supply, A8
Dwg No. 4-501527-001 (A)

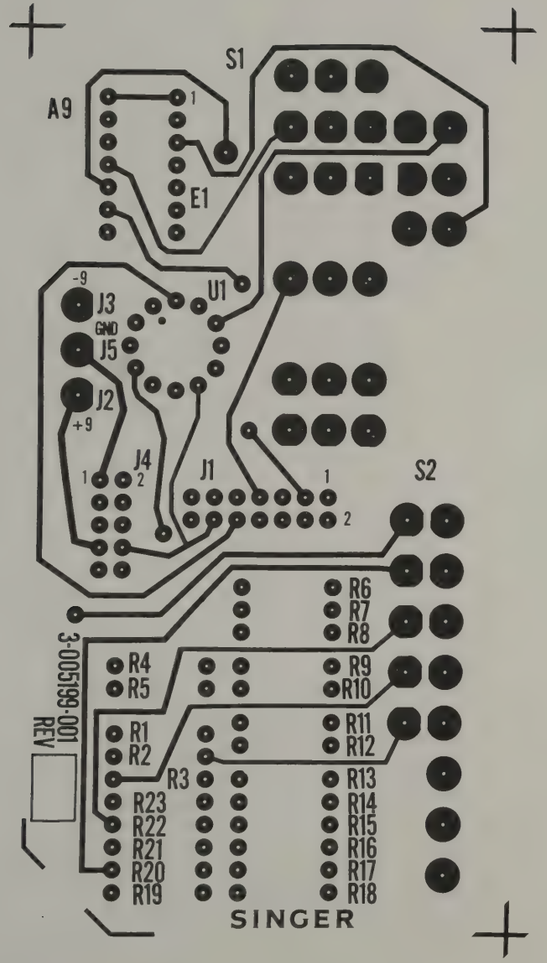

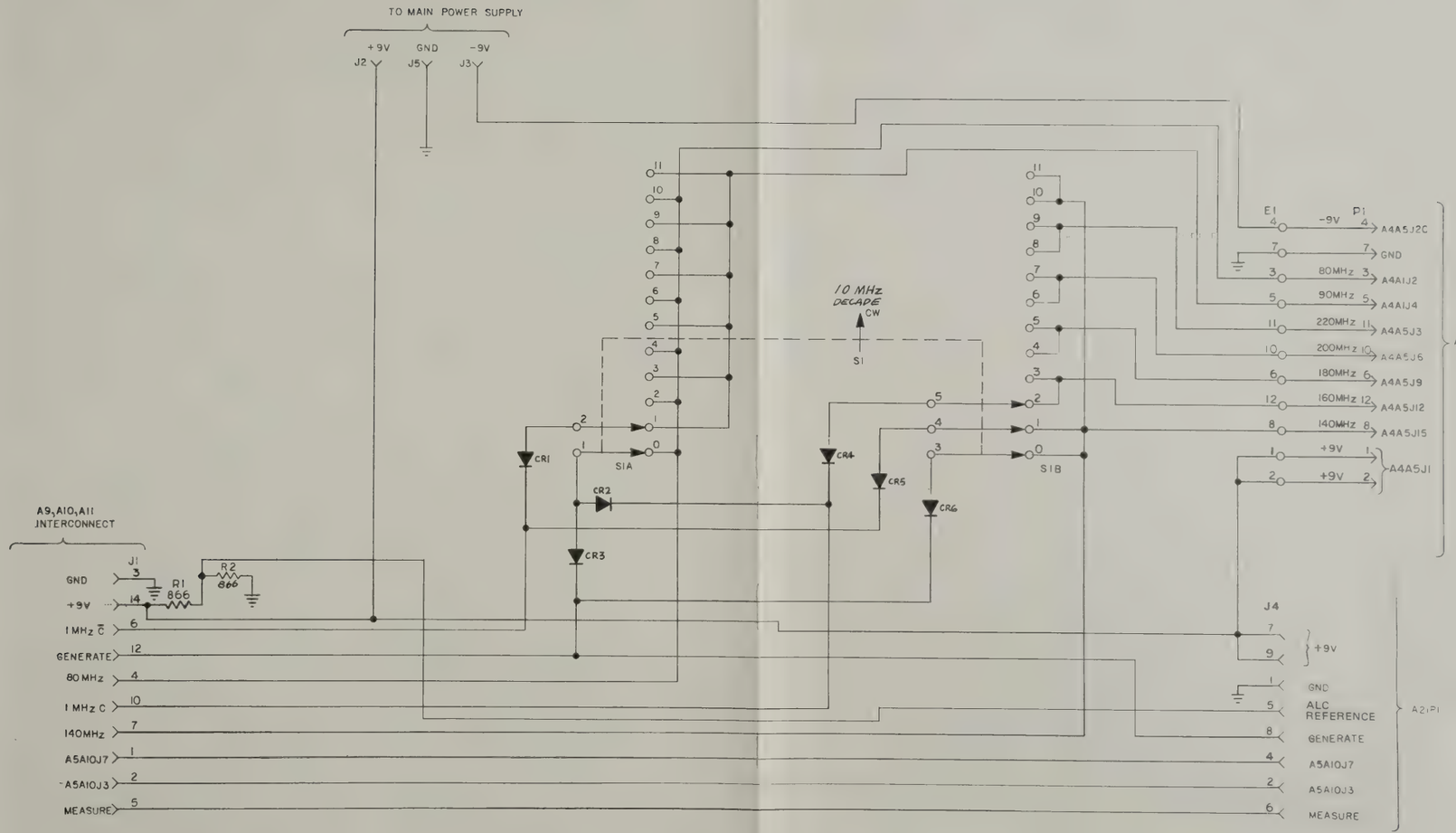

NOTES: UNLESS OTHERWISE SPECIFIED
1. RESISTOR VALUES ARE IN OHMS ±1%, 1/8 W.
2. ALL DIODES ARE IN4148.
3. SWITCH SHOWN IN '0' DIAL POSITION.

Figure 9-34. Schematic Diagram
10MHz Switch, A9
Dwg No. 3-501643-001(A)

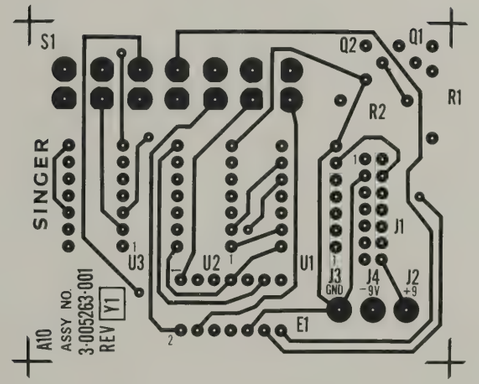

NOTES: UNLESS OTHERWISE SPECIFIED

1. ALL RESISTORS VALUES ARE IN OHMS, ±5%, 1/4 W.
2. SWITCH IS SHOWN IN 0 DIAL POSITION.
3. PARTIAL REF DESIGNATORS ARE SHOWN. FOR COMPLETE DESIGNATION PREFIX WITH ASSY REF DES A10. EXAMPLE: R1 IS A10R1.

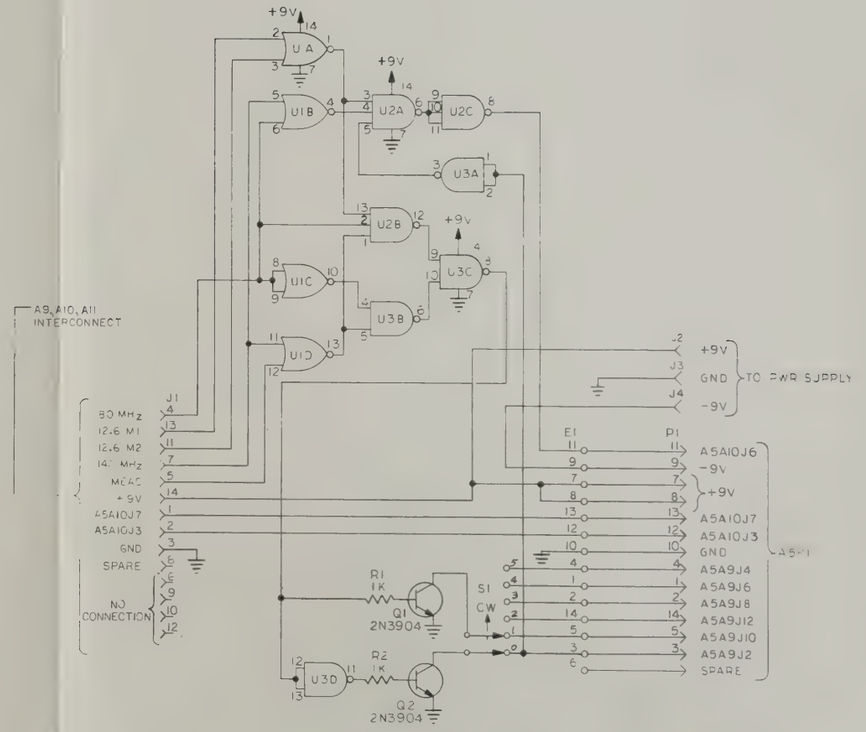

Figure 9-35. Schematic Diagram
100 MHz Switch, A10
Dwg No. 3-501590-001

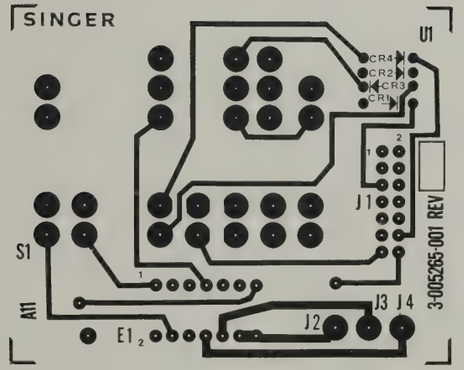

NOTES: UNLESS OTHERWISE SPECIFIED

1. PARTIAL REFERENCE DESIGNATIONS ARE SHOWN. FOR COMPLETE DESIGNATION, PREFIX WITH ASSY REFERENCE DESIGNATION. EXAMPLE: S1 IS A11S1.
2. ALL DIODES ARE 1N4148.
3. SWITCH IS SHOWN IN 0 DIAL POSITION.

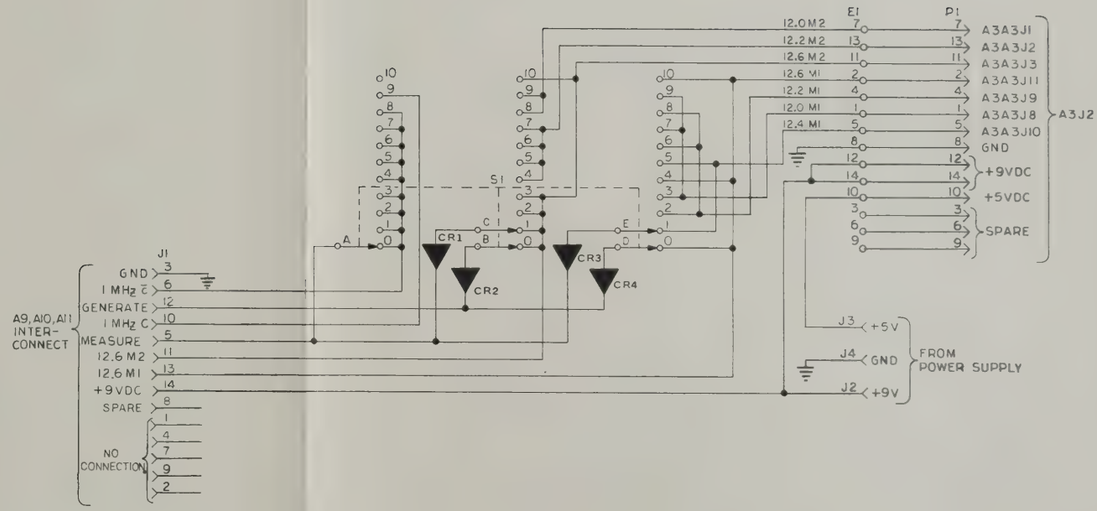

Figure 9-36, Schematic Diagram
1 MHz Switch, A11
Dwg No. 3-501591-001

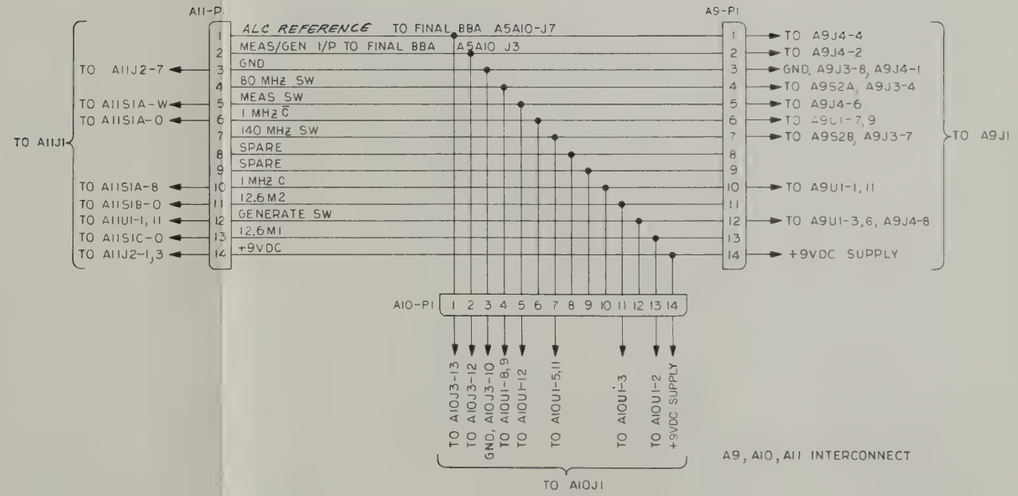

Figure 9-37. Schematic Diagram
Interconnect, A9, A10, A11
Dwg No. 3-501592-001(A)

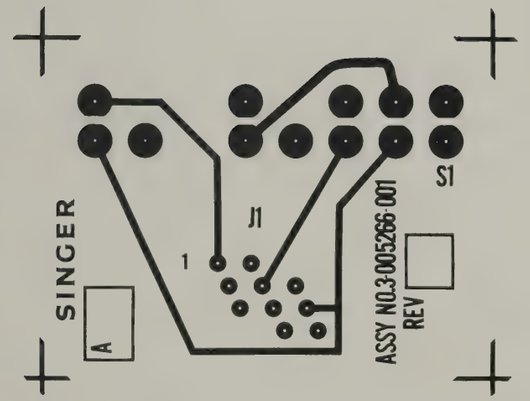

NOTES: UNLESS OTHERWISE SPECIFIED

(1) ON NEXT HIGHER DECADE.

2. SWITCH IS SHOWN IN 0 DIAL POSITION.

3. PARTIAL REF DESIGNATORS ARE SHOWN. FOR COMPLETE DESIGNATION PREFIX WITH APPROPRIATE ASSY DES. EXAMPLE: S1 IS A12S1.

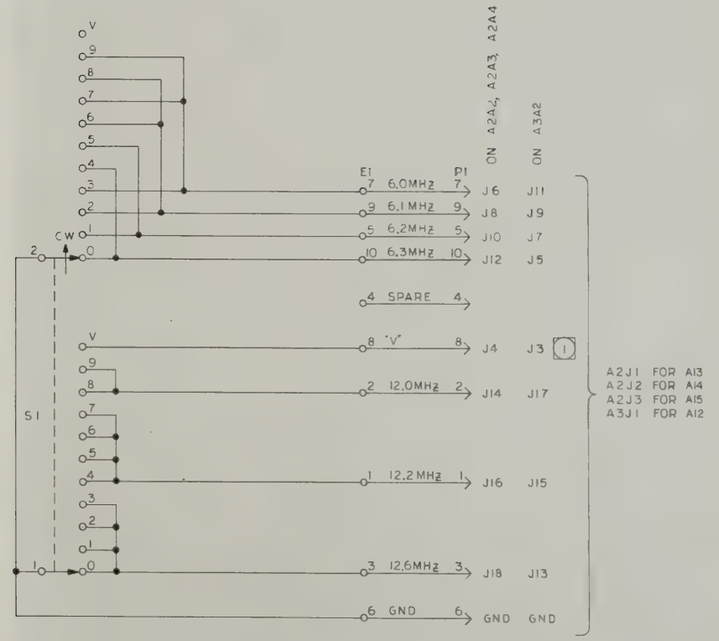

Figure 9-38. Schematic Diagram
0.1, 1, 10 & 100 kHz Freq. Switches
A12, A13, A14, A15
Dwg No. 3-501599-001

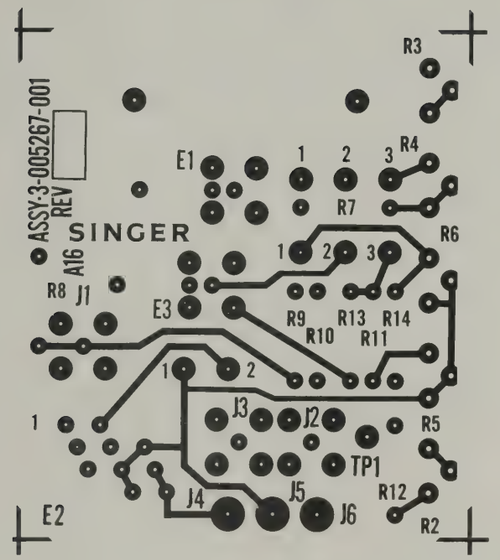

NOTES: UNLESS OTHERWISE SPECIFIED

1. ALL RESISTORS VALUES ARE IN OHMS, ±10%, 1/4 W.
2. PARTIAL REFERENCE DESIGNATIONS ARE SHOWN. FOR COMPLETE DESIGNATION PREFIX WITH ASSY REF DES. EXAMPLE: R1 IS A16R1.

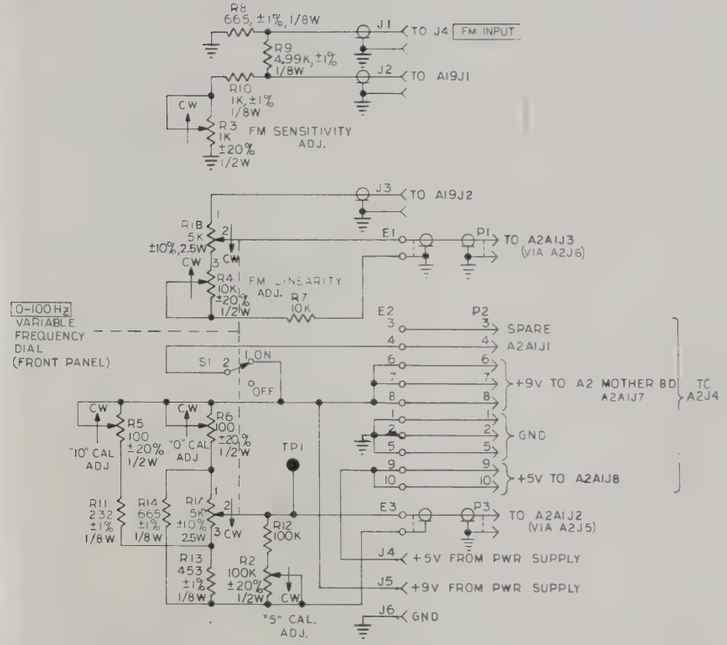

Figure 9-39. Schematic Diagram
0-100 Hz Pot., A16
Dwg No. 3-501583-001(A)

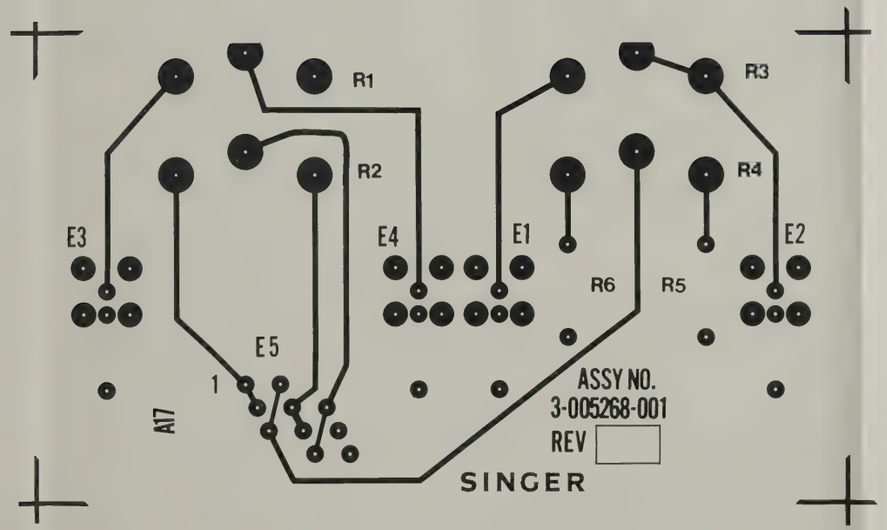

NOTES: UNLESS OTHERWISE SPECIFIED

1. ALL RESISTORS VALUES ARE IN OHMS, 1/4 W, ±5%.
2. PARTIAL REFERENCE DESIGNATIONS ARE SHOWN. FOR COMPLETE DESIGNATION PREFIX WITH ASSY REF DES. EXAMPLE: R1 = A17R1.

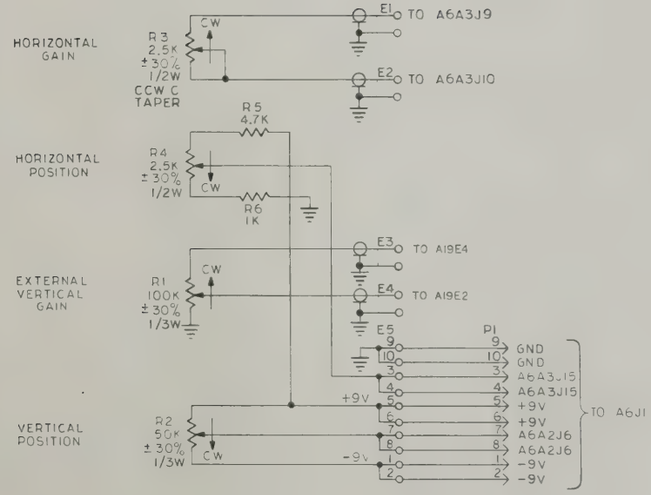

Figure 9-40. Schematic Diagram
VERT POS/VERT GAIN Potentiometer
HORIZ POS/HORIZ GAIN Potentiometer
Assembly, A17
Dwg No. 3-501584-001

NOTES: UNLESS OTHERWISE SPECIFIED

1. RESISTORS VALUES ARE IN OHMS, ± 5%, 1/4 W.
2. PARTIAL REFERENCE DESIGNATIONS ARE SHOWN. FOR COMPLETE DESIGNATION PREFIX WITH ASSY REFERENCE DESIGNATION. EXAMPLE: R1 IS A18R1.

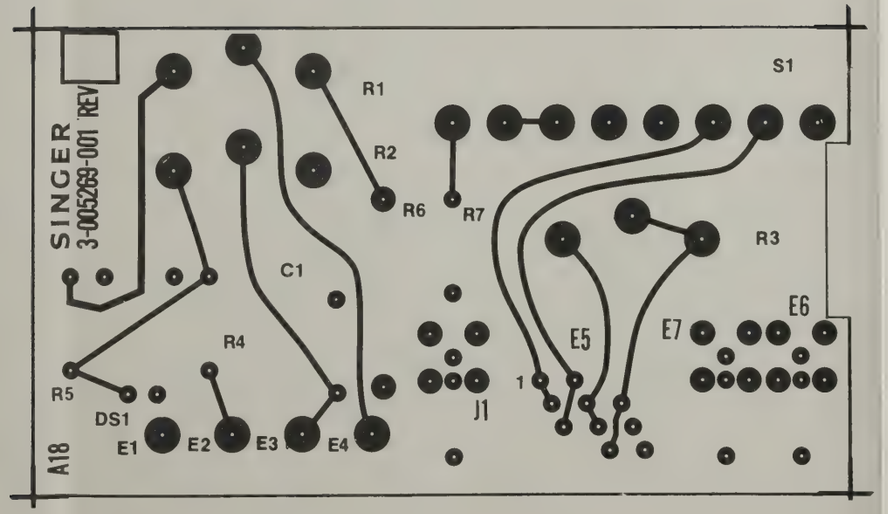

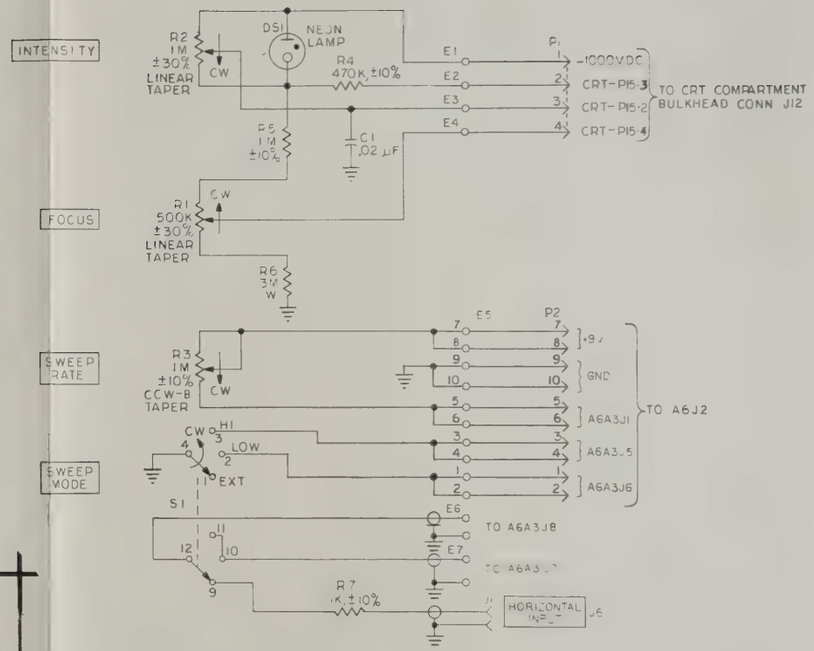

Figure 9-41. Schematic Diagram
FOCUS/INTENSITY
SWEEP MODE/SWEEP RATE
Assembly, A18
Dwg No. 3-501585-001

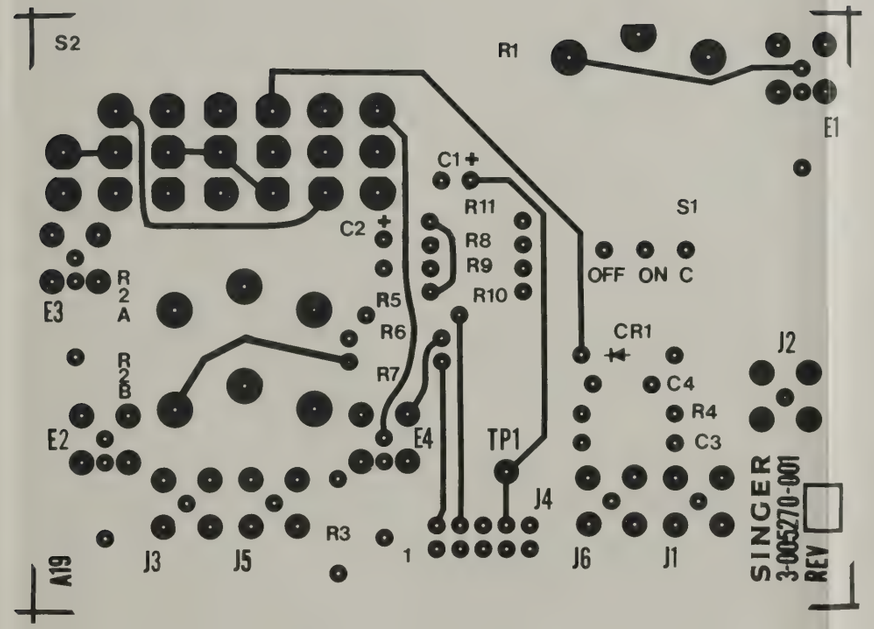

NOTES: UNLESS OTHERWISE SPECIFIED

1. ALL RESISTORS VALUES ARE IN OHMS ±5%, 1/4 W.
2. PARTIAL REFERENCE DESIGNATIONS ARE SHOWN. FOR COMPLETE DESIGNATION PREFIX WITH ASSY DES. EXAMPLE: C1 IS A19C1.

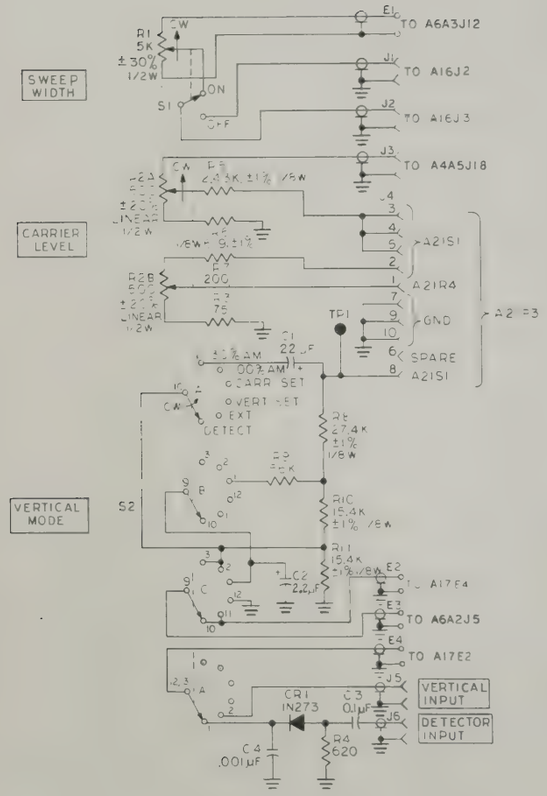

Figure 9-42. Schematic Diagram
VERT MODE/CARR LEVEL
& SWEEP WIDTH
Assembly, A19
Dwg No. 3-501586-001

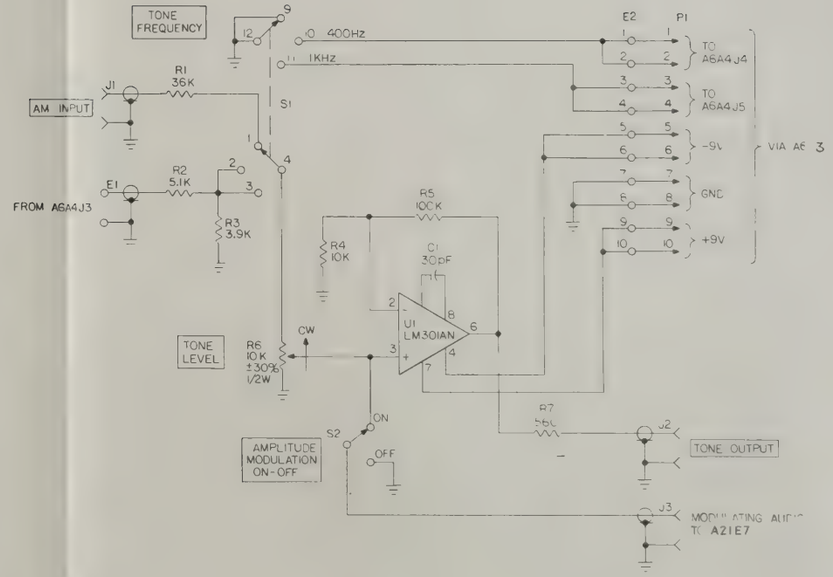

NOTES: UNLESS OTHERWISE SPECIFIED

1. ALL RESISTORS VALUES ARE IN OHMS, ±5%, 1/4 W.
2. PARTIAL REFERENCE DESIGNATION ARE SHOWN. FOR COMPLETE DESIGNATION PREFIX WITH ASSY REF DESIGNATION A20. EXAMPLE: R1 IS A20R1.

Figure 9-43. Schematic Diagram
TONE FREQUENCY/TONE LEVEL
AMPLITUDE MODULATION Switch
Assembly, A20
Dwg No. 3-501587-001

NOTES: UNLESS OTHERWISE SPECIFIED

1. ALL RESISTORS VALUES ARE IN OHMS, ±5%, 1/4 W.
2. PARTIAL REFERENCE DESIGNATIONS ARE SHOWN. FOR COMPLETE DESIGNATION PREFIX WITH ASSY REF DES. EXAMPLE R1 IS A21R1.

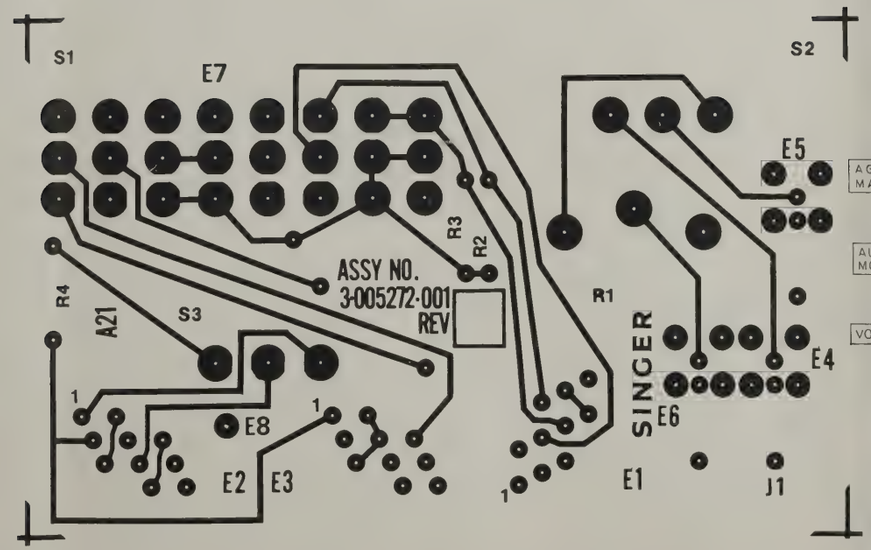

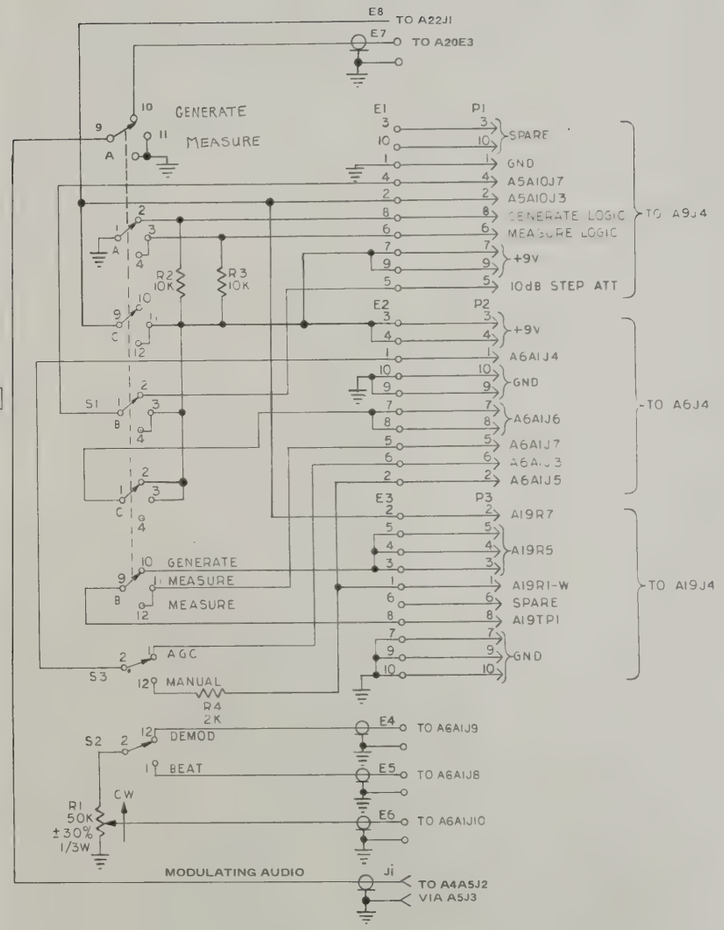

Figure 9-44. Schematic Diagram
FUNCTION/AGC/MANUAL Switch
AUDIO MODE/VOLUME Switch/Pot.
Assembly, A21
Dwg No. 3-501588-001

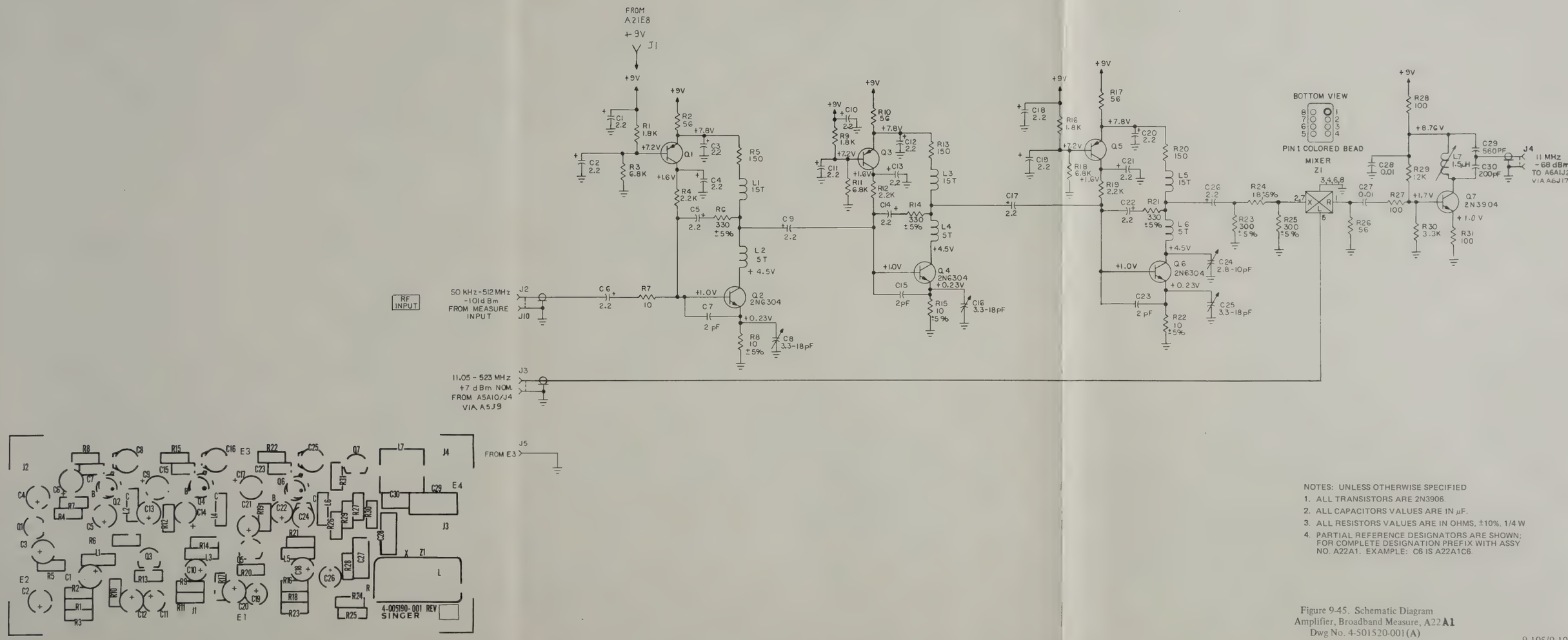

NOTES: UNLESS OTHERWISE SPECIFIED

1. ALL TRANSISTORS ARE 2N3906.
2. ALL CAPACITORS VALUES ARE IN μF.
3. ALL RESISTORS VALUES ARE IN OHMS, ±10%, 1/4 W
4. PARTIAL REFERENCE DESIGNATORS ARE SHOWN; FOR COMPLETE DESIGNATION PREFIX WITH ASSY NO. A22A1. EXAMPLE: C6 IS A22A1C6.

Figure 9-45. Schematic Diagram Amplifier, Broadband Measure, A22**A1** Dwg No. 4-501520-001(A)

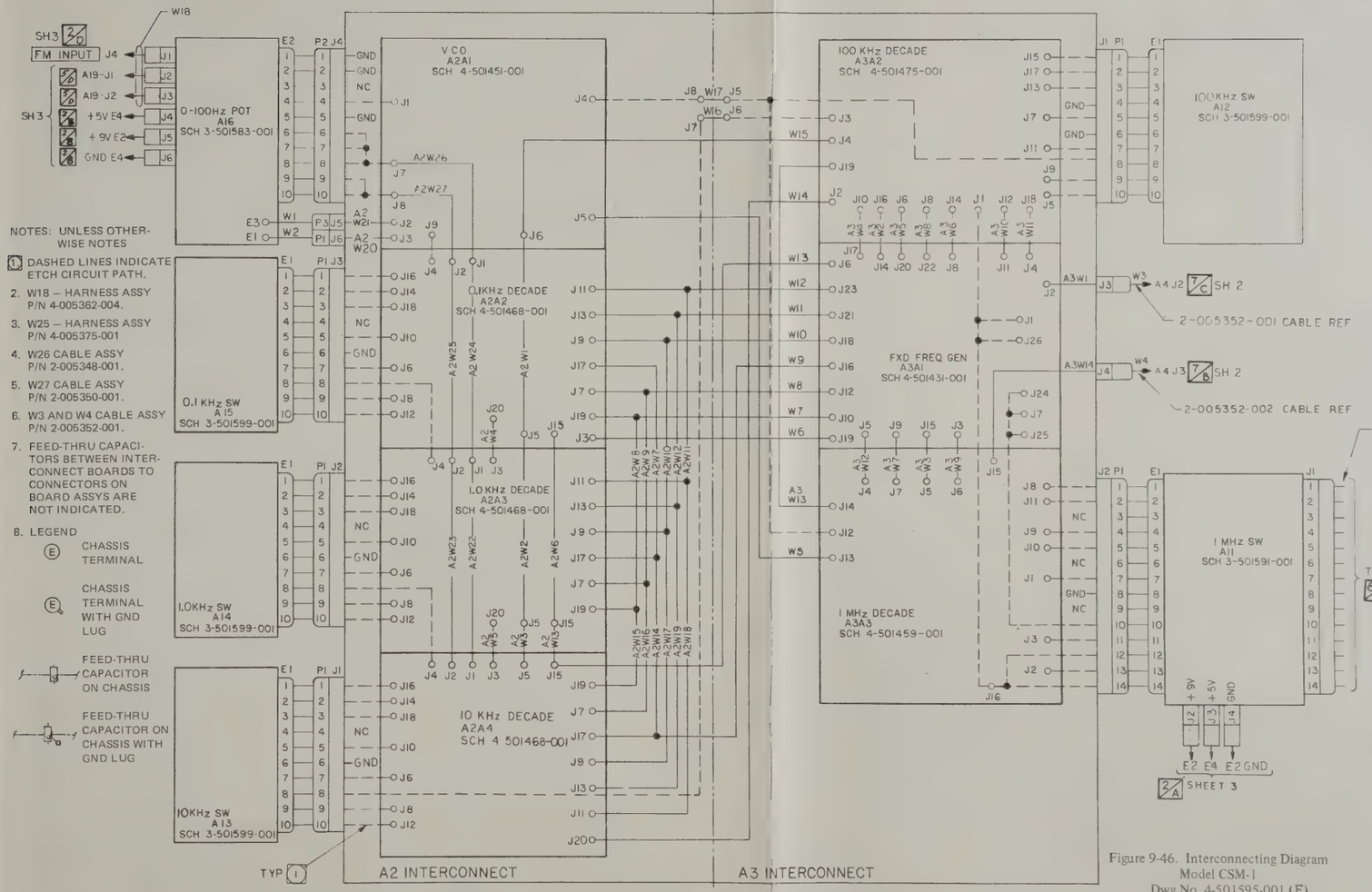
FM INPUT
0-100Hz POT A16 SCH 3-501583-001
VCO A2A1 SCH 4-501451-001
100 KHz DECADE A3A2 SCH 4-501475-001
100KHz SW A12 SCH 3-501599-001
0.1KHz DECADE A2A2 SCH 4-501468-001
0.1 KHz SW A15 SCH 3-501599-001
FXD FREQ GEN A3A1 SCH 4-501431-001
1.0KHz DECADE A2A3 SCH 4-501468-001
1.0KHz SW A14 SCH 3-501599-001
1 MHz SW A11 SCH 3-501591-001
1 MHz DECADE A3A3 SCH 4-501459-001
10 KHz DECADE A2A4 SCH 4 501468-001
10KHz SW A13 SCH 3-501599-001
A2 INTERCONNECT
A3 INTERCONNECT
2-005352-001 CABLE REF
2-005352-002 CABLE REF
TO A9J1
SHEET 3
NOTES: UNLESS OTHERWISE NOTES
1. DASHED LINES INDICATE ETCH CIRCUIT PATH.
2. W18 – HARNESS ASSY P/N 4-005362-004.
3. W25 – HARNESS ASSY P/N 4-005375-001
4. W26 CABLE ASSY P/N 2-005348-001.
5. W27 CABLE ASSY P/N 2-005350-001.
6. W3 AND W4 CABLE ASSY P/N 2-005352-001.
7. FEED-THRU CAPACITORS BETWEEN INTERCONNECT BOARDS TO CONNECTORS ON BOARD ASSYS ARE NOT INDICATED.
8. LEGEND
CHASSIS TERMINAL
CHASSIS TERMINAL WITH GND LUG
FEED-THRU CAPACITOR ON CHASSIS
FEED-THRU CAPACITOR ON CHASSIS WITH GND LUG
1 DASHED LINES INDICATE ETCH CIRCUIT PATH.

Figure 9-46. Interconnecting Diagram
Model CSM-1
Dwg No. 4-501595-001 (F)
(Sheet 1 of 3)

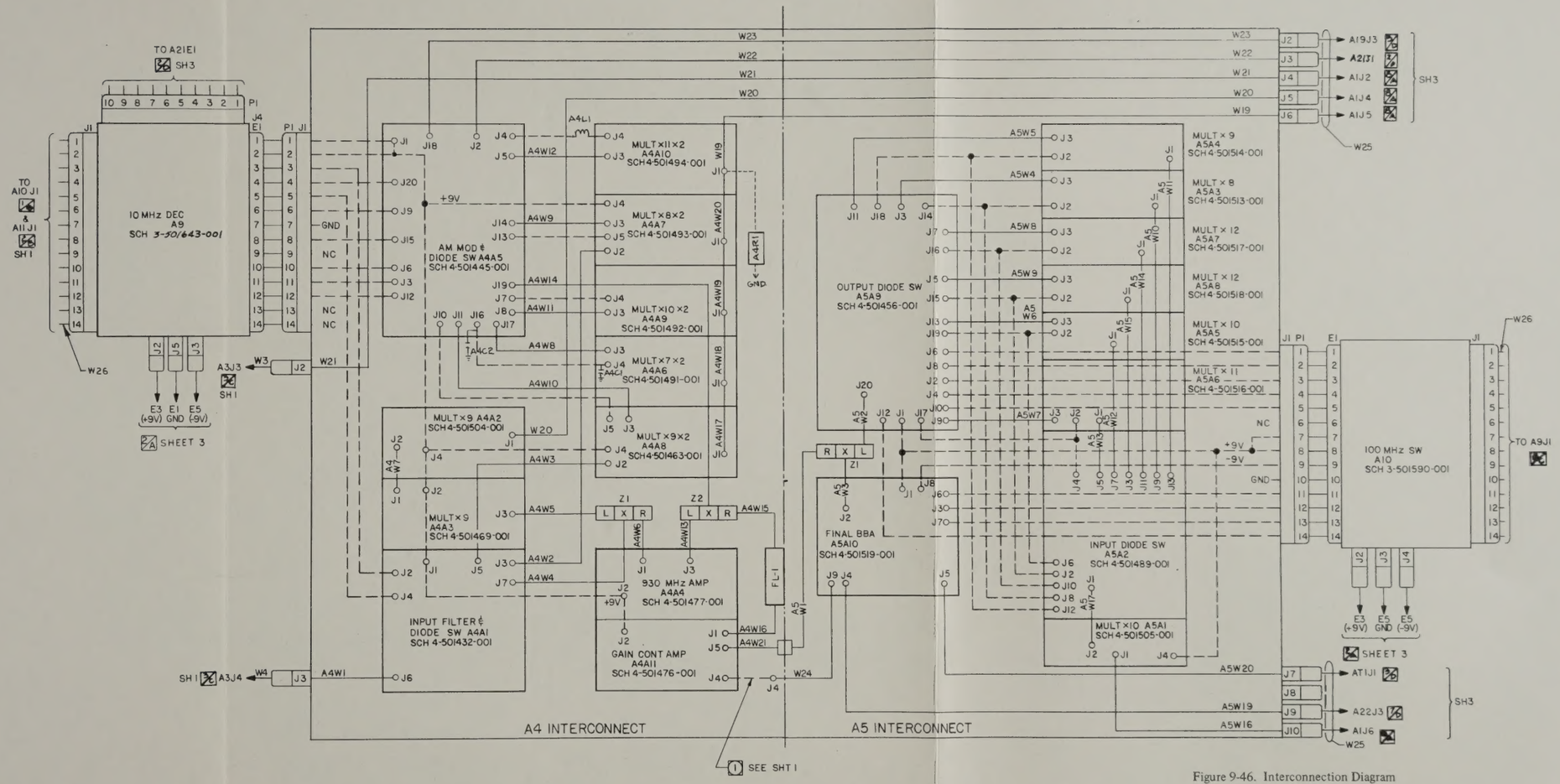

Figure 9-46. Interconnection Diagram
Model CSM-1
Dwg No. 4-501595-001(F)
(Sheet 2 of 3)